DATA SHEET

PCF8574
Remote 8-bit I/O expander for I²C-bus

Product specification
Supersedes data of September 1994
File under Integrated Circuits, IC12

1997 Apr 02

Philips Semiconductors

PHILIPS

CONTENTS

1 FEATURES
2 GENERAL DESCRIPTION
3 ORDERING INFORMATION
4 BLOCK DIAGRAM
5 PINNING
6 CHARACTERISTICS OF THE I²C-BUS
6.1 Bit transfer
6.2 Start and stop conditions
6.3 System configuration
6.4 Acknowledge
7 FUNCTIONAL DESCRIPTION
7.1 Addressing
7.2 Interrupt
7.3 Quasi-bidirectional I/Os
8 LIMITING VALUES
9 HANDLING
10 DC CHARACTERISTICS
11 I²C-BUS TIMING CHARACTERISTICS
12 PACKAGE OUTLINES
13 SOLDERING
13.1 Introduction
13.2 DIP
13.2.1 Soldering by dipping or by wave
13.2.2 Repairing soldered joints
13.3 SO and SSOP
13.3.1 Reflow soldering
13.3.2 Wave soldering
13.3.3 Repairing soldered joints
14 DEFINITIONS
15 LIFE SUPPORT APPLICATIONS
16 PURCHASE OF PHILIPS I²C COMPONENTS

Remote 8-bit I/O expander for I²C-bus PCF8574

1 FEATURES

- Operating supply voltage 2.5 to 6 V
- Low standby current consumption of 10 μA maximum
- I²C to parallel port expander
- Open-drain interrupt output
- 8-bit remote I/O port for the I²C-bus
- Compatible with most microcontrollers
- Latched outputs with high current drive capability for directly driving LEDs
- Address by 3 hardware address pins for use of up to 8 devices (up to 16 with PCF8574A)
- DIP16, or space-saving SO16 or SSOP20 packages.

2 GENERAL DESCRIPTION

The PCF8574 is a silicon CMOS circuit. It provides general purpose remote I/O expansion for most microcontroller families via the two-line bidirectional bus (I²C).

The device consists of an 8-bit quasi-bidirectional port and an I²C-bus interface. The PCF8574 has a low current consumption and includes latched outputs with high current drive capability for directly driving LEDs. It also possesses an interrupt line ($\overline{INT}$) which can be connected to the interrupt logic of the microcontroller. By sending an interrupt signal on this line, the remote I/O can inform the microcontroller if there is incoming data on its ports without having to communicate via the I²C-bus. This means that the PCF8574 can remain a simple slave device.

The PCF8574 and PCF8574A versions differ only in their slave address as shown in Fig.9.

3 ORDERING INFORMATION

TYPE NUMBER	PACKAGE		
	NAME	DESCRIPTION	VERSION
PCF8574P; PCF8574AP	DIP16	plastic dual in-line package; 16 leads (300 mil)	SOT38-1
PCF8574T; PCF8574AT	SO16	plastic small outline package; 16 leads; body width 7.5 mm	SOT162-1
PCF8574TS	SSOP20	plastic shrink small outline package; 20 leads; body width 4.4 mm	SOT266-1

4 BLOCK DIAGRAM

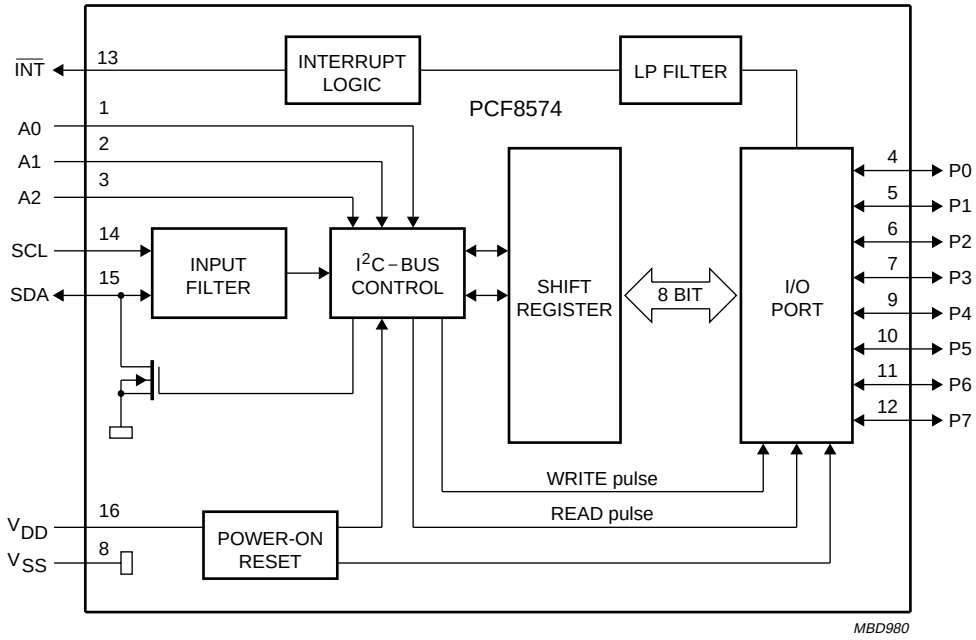

Fig.1 Block diagram (SOT38-1 and SOT162-1).

5 PINNING

SYMBOL	PIN		DESCRIPTION
	DIP16; SO16	SSOP20	
A0	1	6	address input 0
A1	2	7	address input 1
A2	3	9	address input 2
P0	4	10	quasi-bidirectional I/O 0
P1	5	11	quasi-bidirectional I/O 1
P2	6	12	quasi-bidirectional I/O 2
P3	7	14	quasi-bidirectional I/O 3
V_{SS}	8	15	supply ground
P4	9	16	quasi-bidirectional I/O 4
P5	10	17	quasi-bidirectional I/O 5
P6	11	19	quasi-bidirectional I/O 6
P7	12	20	quasi-bidirectional I/O 7
$\overline{INT}$	13	1	interrupt output (active LOW)
SCL	14	2	serial clock line
SDA	15	4	serial data line
V_{DD}	16	5	supply voltage
n.c.	–	3	not connected
n.c.	–	8	not connected
n.c.	–	13	not connected
n.c.	–	18	not connected

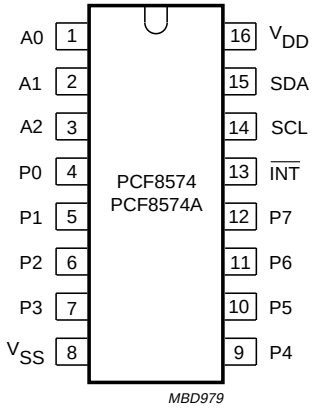

Fig.2 Pin configuration (DIP16; SO16).

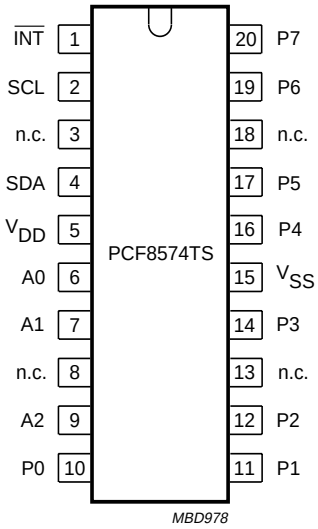

Fig.3 Pin configuration (SSOP20).

6 CHARACTERISTICS OF THE I²C-BUS

The I²C-bus is for 2-way, 2-line communication between different ICs or modules. The two lines are a serial data line (SDA) and a serial clock line (SCL). Both lines must be connected to a positive supply via a pull-up resistor when connected to the output stages of a device. Data transfer may be initiated only when the bus is not busy.

6.1 Bit transfer

One data bit is transferred during each clock pulse. The data on the SDA line must remain stable during the HIGH period of the clock pulse as changes in the data line at this time will be interpreted as control signals (see Fig.4).

6.2 Start and stop conditions

Both data and clock lines remain HIGH when the bus is not busy. A HIGH-to-LOW transition of the data line, while the clock is HIGH is defined as the start condition (S).
A LOW-to-HIGH transition of the data line while the clock is HIGH is defined as the stop condition (P) (see Fig.5).

6.3 System configuration

A device generating a message is a ‘transmitter’, a device receiving is the ‘receiver’. The device that controls the message is the ‘master’ and the devices which are controlled by the master are the ‘slaves’ (see Fig.6).

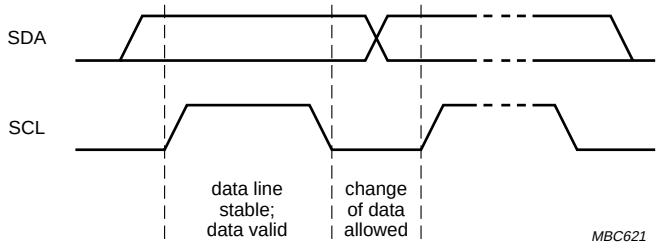

Fig.4 Bit transfer.

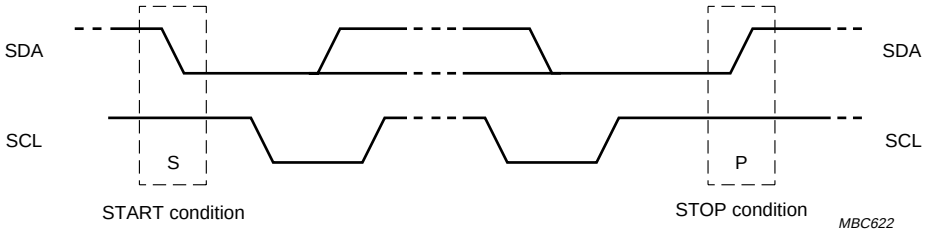

Fig.5 Definition of start and stop conditions.

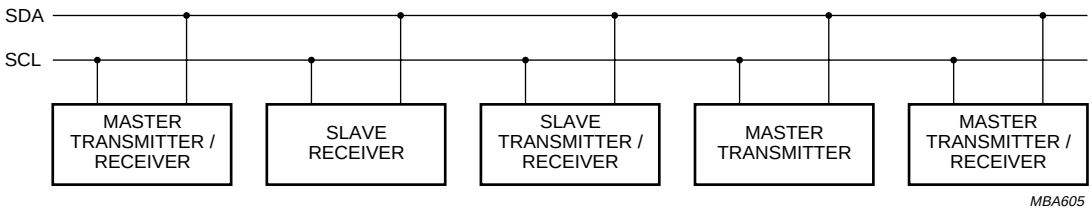

Fig.6 System configuration.

6.4 Acknowledge

The number of data bytes transferred between the start and the stop conditions from transmitter to receiver is not limited. Each byte of eight bits is followed by one acknowledge bit. The acknowledge bit is a HIGH level put on the bus by the transmitter whereas the master generates an extra acknowledge related clock pulse.

A slave receiver which is addressed must generate an acknowledge after the reception of each byte. Also a master must generate an acknowledge after the reception of each byte that has been clocked out of the slave transmitter. The device that acknowledges has to pull down the SDA line during the acknowledge clock pulse, so that the SDA line is stable LOW during the HIGH period of the acknowledge related clock pulse, set-up and hold times must be taken into account.

A master receiver must signal an end of data to the transmitter by **not** generating an acknowledge on the last byte that has been clocked out of the slave. In this event the transmitter must leave the data line HIGH to enable the master to generate a stop condition.

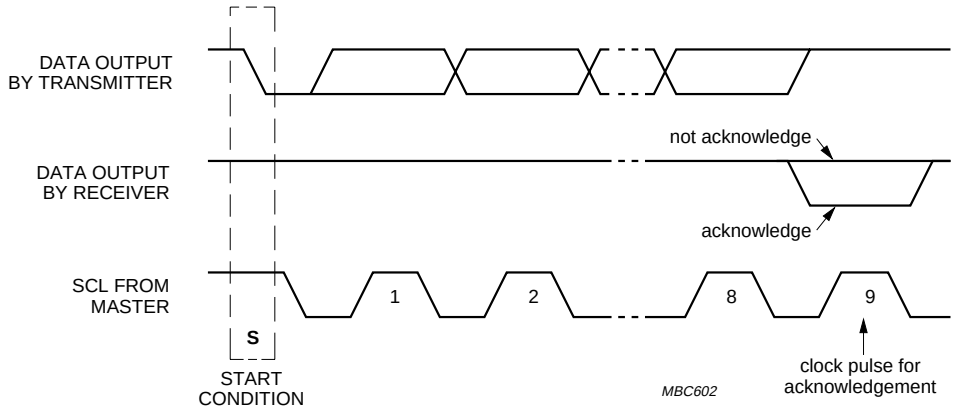

Fig.7 Acknowledgment on the I²C-bus.

7 FUNCTIONAL DESCRIPTION

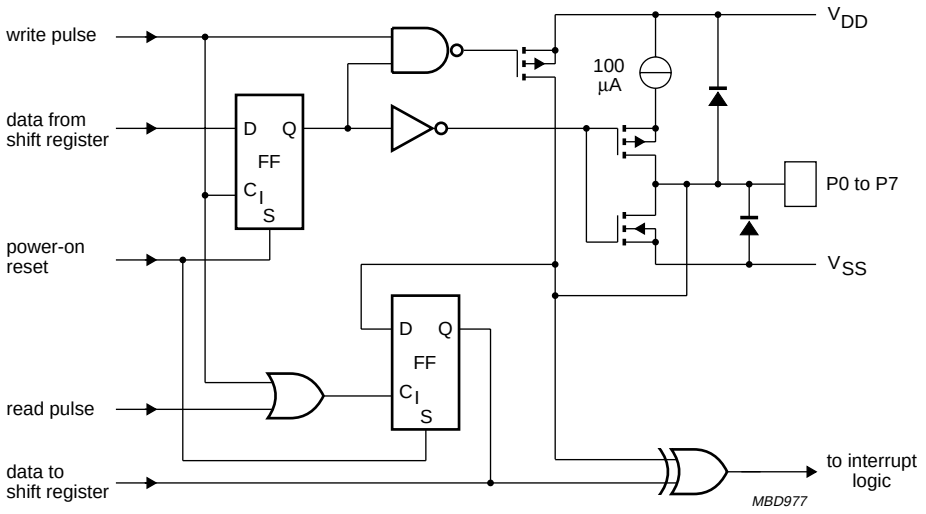

Fig.8 Simplified schematic diagram of each I/O.

7.1 Addressing

For addressing see Figs 9, 10 and 11.

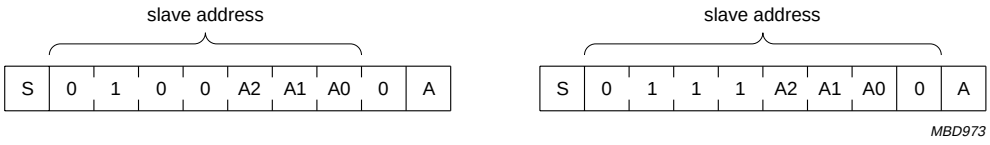

a. b.

(a) PCF8574.
(b) PCF8574A.

Fig.9 PCF8574 and PCF8574A slave addresses.

Each of the PCF8574's eight I/Os can be independently used as an input or output. Input data is transferred from the port to the microcontroller by the READ mode (see Fig.11). Output data is transmitted to the port by the WRITE mode (see Fig.10).

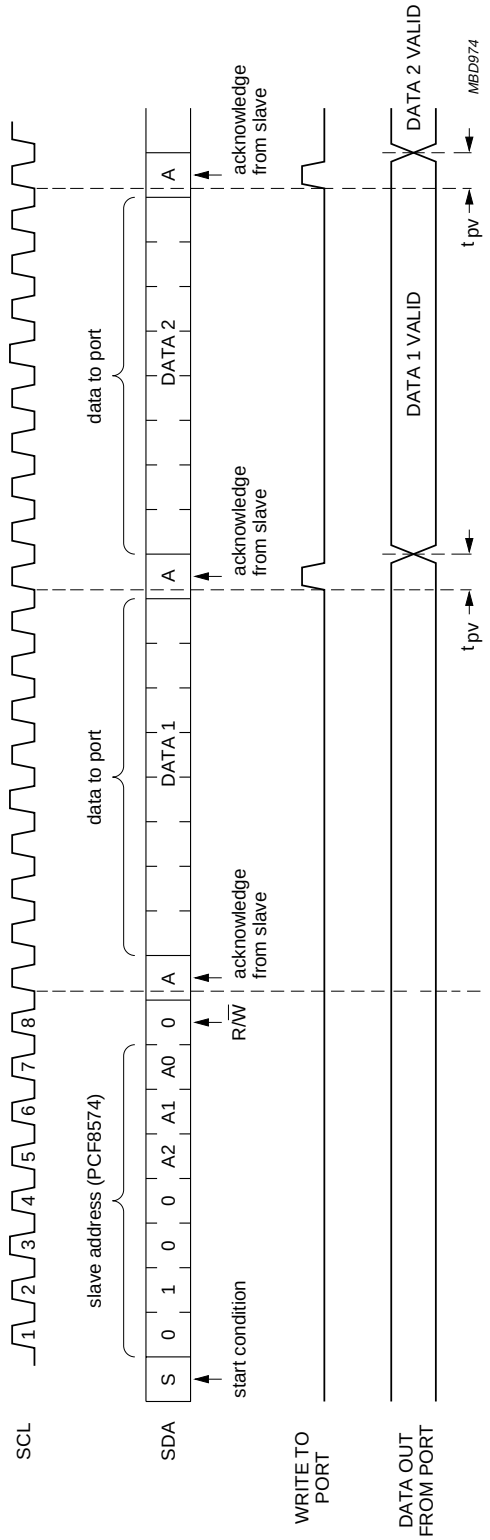

Fig.10 WRITE mode (output).

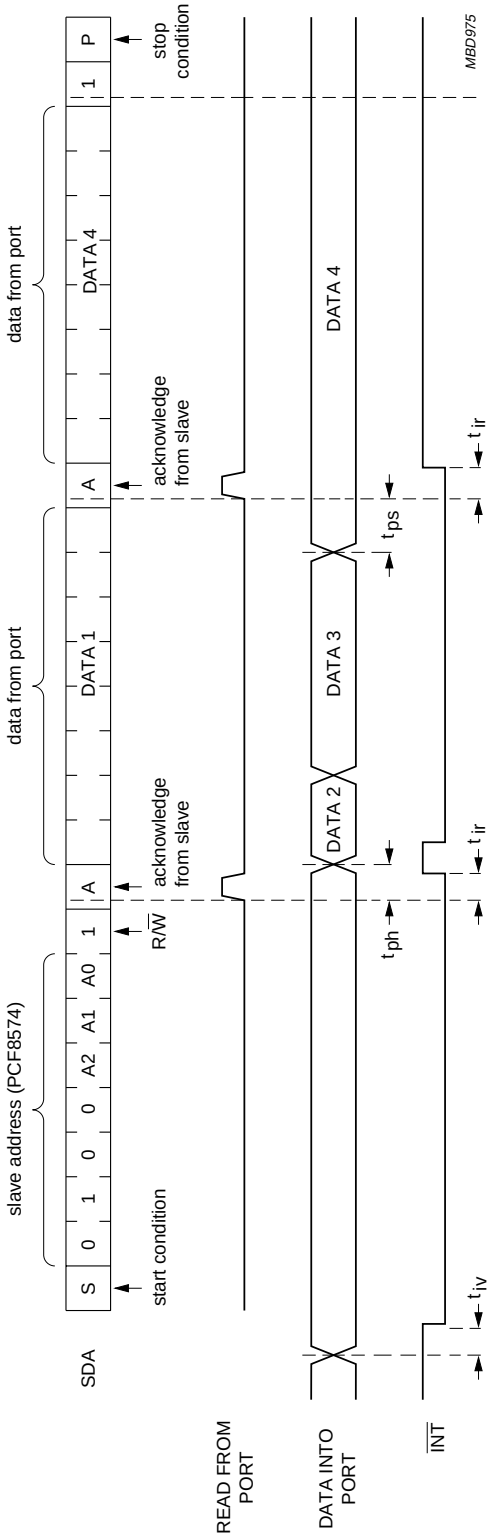

A LOW-to-HIGH transition of SDA, while SCL is HIGH is defined as the stop condition (P). Transfer of data can be stopped at any moment by a stop condition. When this occurs, data present at the last acknowledge phase is valid (output mode). Input data is lost.

Fig.11 READ mode (input).

7.2 Interrupt (see Figs 12 and 13)

The PCF8574 provides an open drain output ($\overline{INT}$) which can be fed to a corresponding input of the microcontroller. This gives these chips a type of master function which can initiate an action elsewhere in the system.

An interrupt is generated by any rising or falling edge of the port inputs in the input mode. After time t_{iv} the signal $\overline{INT}$ is valid.

Resetting and reactivating the interrupt circuit is achieved when data on the port is changed to the original setting or data is read from or written to the port which has generated the interrupt.

Resetting occurs as follows:

- In the READ mode at the acknowledge bit after the rising edge of the SCL signal
- In the WRITE mode at the acknowledge bit after the HIGH-to-LOW transition of the SCL signal
- Interrupts which occur during the acknowledge clock pulse may be lost (or very short) due to the resetting of the interrupt during this pulse.

Each change of the I/Os after resetting will be detected and, after the next rising clock edge, will be transmitted as $\overline{INT}$. Reading from or writing to another device does not affect the interrupt circuit.

7.3 Quasi-bidirectional I/Os (see Fig.14)

A quasi-bidirectional I/O can be used as an input or output without the use of a control signal for data direction. At power-on the I/Os are HIGH. In this mode only a current source to V_{DD} is active. An additional strong pull-up to V_{DD} allows fast rising edges into heavily loaded outputs. These devices turn on when an output is written HIGH, and are switched off by the negative edge of SCL. The I/Os should be HIGH before being used as inputs.

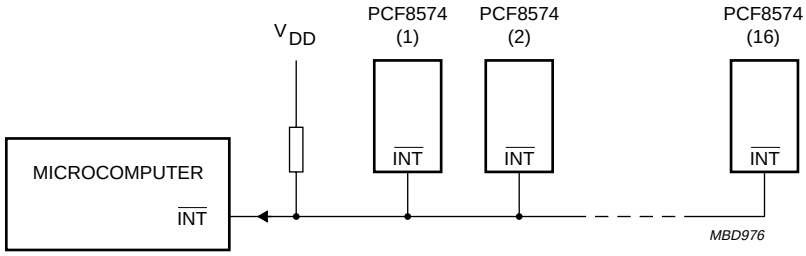

Fig.12 Application of multiple PCF8574s with interrupt.

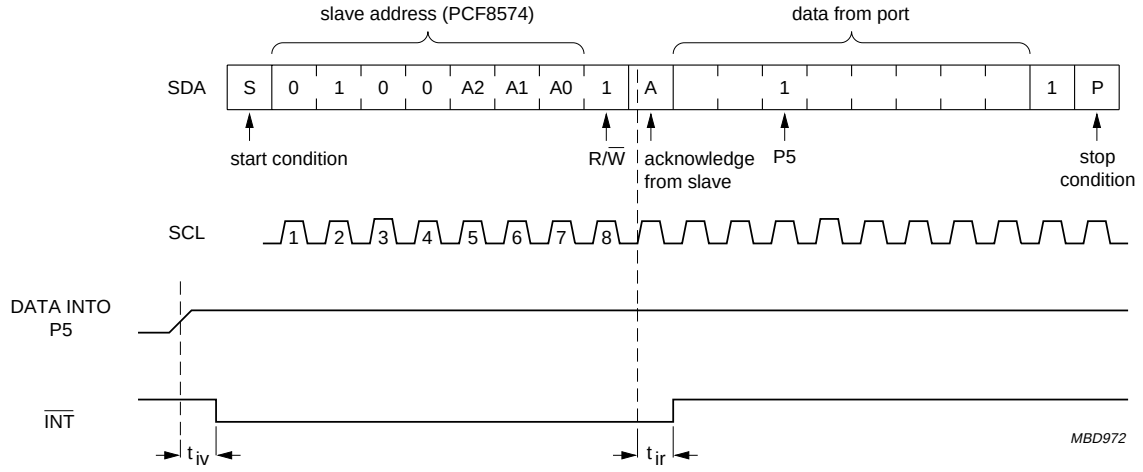

Fig.13 Interrupt generated by a change of input to I/O P5.

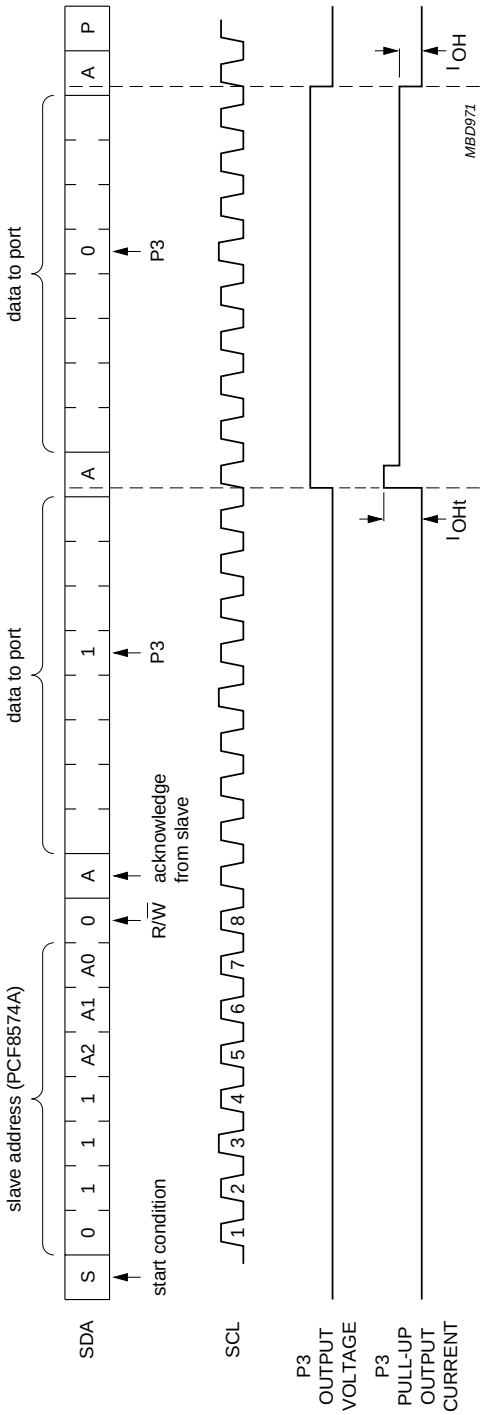

Fig.14 Transient pull-up current I_{OHt} while P3 changes from LOW-to-HIGH and back to LOW.

8 LIMITING VALUES

In accordance with the Absolute Maximum Rating System (IEC 134).

SYMBOL	PARAMETER	MIN.	MAX.	UNIT
V_{DD}	supply voltage	–0.5	+7.0	V
V_I	input voltage	V_{SS} – 0.5	V_{DD} + 0.5	V
I_I	DC input current	–	±20	mA
I_O	DC output current	–	±25	mA
I_{DD}	supply current	–	±100	mA
I_{SS}	supply current	–	±100	mA
P_{tot}	total power dissipation	–	400	mW
P_O	power dissipation per output	–	100	mW
T_{stg}	storage temperature	–65	+150	°C
T_{amb}	operating ambient temperature	–40	+85	°C

9 HANDLING

Inputs and outputs are protected against electrostatic discharge in normal handling. However, to be totally safe, it is desirable to take precautions appropriate to handling MOS devices. Advice can be found in Data Handbook IC12 under *"Handling MOS Devices"*.

10 DC CHARACTERISTICS

V_{DD} = 2.5 to 6 V; V_{SS} = 0 V; T_{amb} = –40 to +85 °C; unless otherwise specified.

SYMBOL	PARAMETER	CONDITIONS	MIN.	TYP.	MAX.	UNIT
Supply						
V_{DD}	supply voltage		2.5	–	6.0	V
I_{DD}	supply current	operating mode; V_{DD} = 6 V; no load; $V_I = V_{DD}$ or V_{SS}; f_{SCL} = 100 kHz	–	40	100	µA
I_{stb}	standby current	standby mode; V_{DD} = 6 V; no load; $V_I = V_{DD}$ or V_{SS}	–	2.5	10	µA
V_{POR}	Power-on reset voltage	V_{DD} = 6 V; no load; $V_I = V_{DD}$ or V_{SS}; note 1	–	1.3	2.4	V
Input SCL; input/output SDA						
V_{IL}	LOW level input voltage		–0.5	–	$+0.3V_{DD}$	V
V_{IH}	HIGH level input voltage		$0.7V_{DD}$	–	V_{DD} + 0.5	V
I_{OL}	LOW level output current	V_{OL} = 0.4 V	3	–	–	mA
I_L	leakage current	$V_I = V_{DD}$ or V_{SS}	–1	–	+1	µA
C_i	input capacitance	$V_I = V_{SS}$	–	–	7	pF

SYMBOL	PARAMETER	CONDITIONS	MIN.	TYP.	MAX.	UNIT
I/Os						
V_{IL}	LOW level input voltage		–0.5	–	$+0.3V_{DD}$	V
V_{IH}	HIGH level input voltage		$0.7V_{DD}$	–	$V_{DD} + 0.5$	V
$I_{IHL(max)}$	maximum allowed input current through protection diode	$V_I \geq V_{DD}$ or $V_I \leq V_{SS}$	–	–	±400	µA
I_{OL}	LOW level output current	V_{OL} = 1 V; V_{DD} = 5 V	10	25	–	mA
I_{OH}	HIGH level output current	$V_{OH} = V_{SS}$	30	–	300	µA
I_{OHt}	transient pull-up current	HIGH during acknowledge (see Fig.14); $V_{OH} = V_{SS}$; V_{DD} = 2.5 V	–	–1	–	mA
C_i	input capacitance		–	–	10	pF
C_o	output capacitance		–	–	10	pF
Port timing; $C_L \leq$ 100 pF (see Figs 10 and 11)						
t_{pv}	output data valid		–	–	4	µs
t_{su}	input data set-up time		0	–	–	µs
t_h	input data hold time		4	–	–	µs
Interrupt $\overline{INT}$ (see Fig.13)						
I_{OL}	LOW level output current	V_{OL} = 0.4 V	1.6	–	–	mA
I_L	leakage current	$V_I = V_{DD}$ or V_{SS}	–1	–	+1	µA
TIMING; $C_L \leq$ 100 pF						
t_{iv}	input data valid time		–	–	4	µs
t_{ir}	reset delay time		–	–	4	µs
Select inputs A0 to A2						
V_{IL}	LOW level input voltage		–0.5	–	$+0.3V_{DD}$	V
V_{IH}	HIGH level input voltage		$0.7V_{DD}$	–	$V_{DD} + 0.5$	V
I_{LI}	input leakage current	pin at V_{DD} or V_{SS}	–250	–	+250	nA

Note

1. The Power-on reset circuit resets the I²C-bus logic with $V_{DD} < V_{POR}$ and sets all I/Os to logic 1 (with current source to V_{DD}).

11 I²C-BUS TIMING CHARACTERISTICS

SYMBOL	PARAMETER	MIN.	TYP.	MAX.	UNIT
I²C-BUS TIMING (see Fig.15; note 1)					
f_{SCL}	SCL clock frequency	–	–	100	kHz
t_{SW}	tolerable spike width on bus	–	–	100	ns
t_{BUF}	bus free time	4.7	–	–	µs
$t_{SU;STA}$	START condition set-up time	4.7	–	–	µs
$t_{HD;STA}$	START condition hold time	4.0	–	–	µs
t_{LOW}	SCL LOW time	4.7	–	–	µs
t_{HIGH}	SCL HIGH time	4.0	–	–	µs
t_r	SCL and SDA rise time	–	–	1.0	µs
t_f	SCL and SDA fall time	–	–	0.3	µs
$t_{SU;DAT}$	data set-up time	250	–	–	ns
$t_{HD;DAT}$	data hold time	0	–	–	ns
$t_{VD;DAT}$	SCL LOW to data out valid	–	–	3.4	µs
$t_{SU;STO}$	STOP condition set-up time	4.0	–	–	µs

Note

1. All the timing values are valid within the operating supply voltage and ambient temperature range and refer to V_{IL} and V_{IH} with an input voltage swing of V_{SS} to V_{DD}.

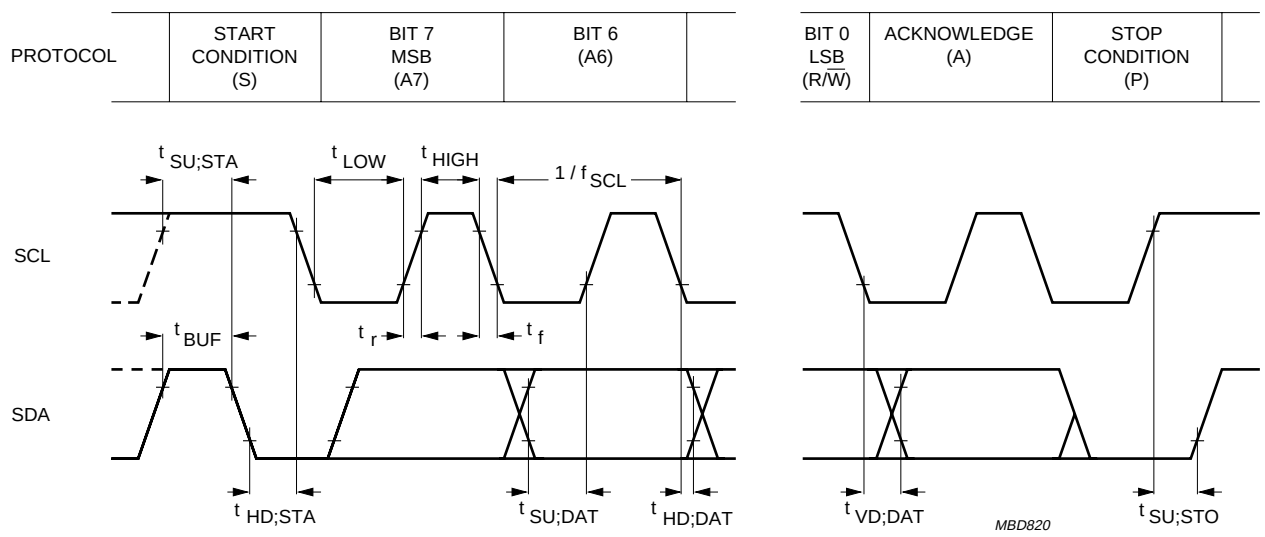

Fig.15 I²C-bus timing diagram.

12 PACKAGE OUTLINES

DIP16: plastic dual in-line package; 16 leads (300 mil); long body **SOT38-1**

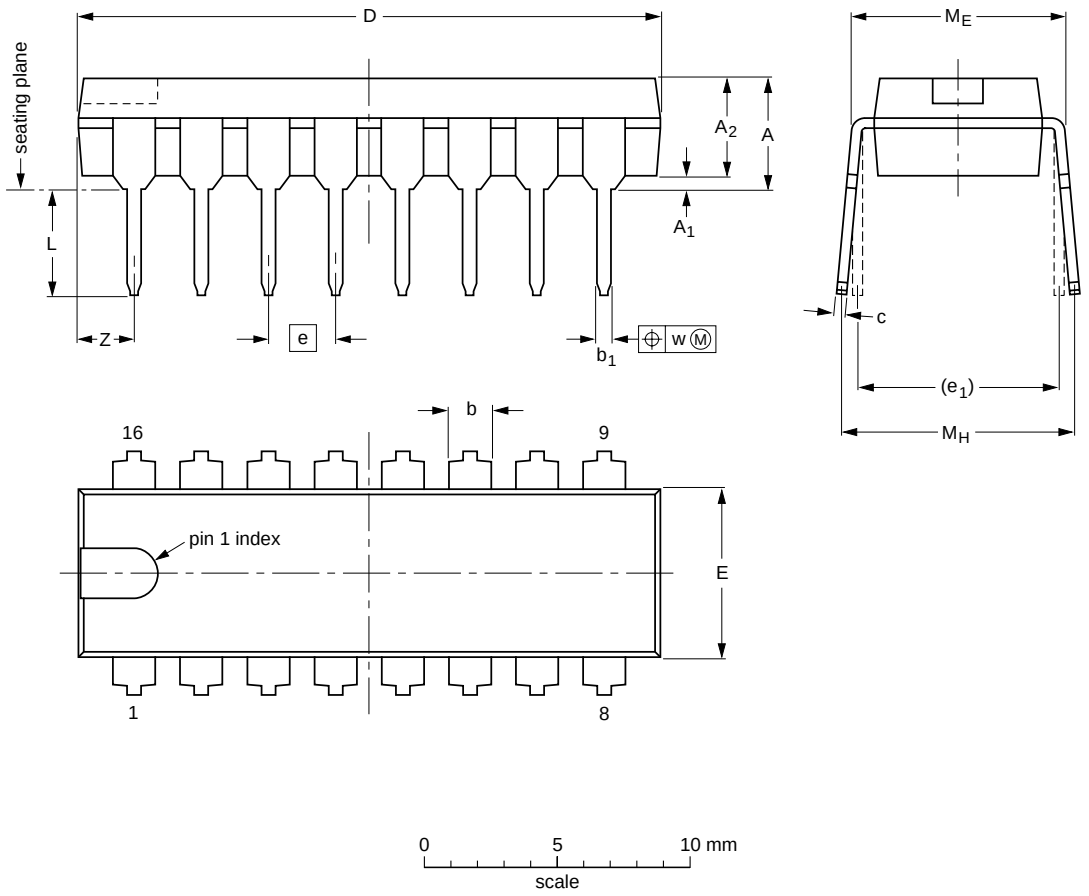

DIMENSIONS (inch dimensions are derived from the original mm dimensions)

UNIT	A max.	A_1 min.	A_2 max.	b	b_1	c	D (1)	E (1)	e	e_1	L	M_E	M_H	w	Z (1) max.
mm	4.7	0.51	3.7	1.40 1.14	0.53 0.38	0.32 0.23	21.8 21.4	6.48 6.20	2.54	7.62	3.9 3.4	8.25 7.80	9.5 8.3	0.254	2.2
inches	0.19	0.020	0.15	0.055 0.045	0.021 0.015	0.013 0.009	0.86 0.84	0.26 0.24	0.10	0.30	0.15 0.13	0.32 0.31	0.37 0.33	0.01	0.087

Note

1. Plastic or metal protrusions of 0.25 mm maximum per side are not included.

OUTLINE VERSION	REFERENCES				EUROPEAN PROJECTION	ISSUE DATE
	IEC	JEDEC	EIAJ			
SOT38-1	050G09	MO-001AE				~~92-10-02~~ 95-01-19

SO16: plastic small outline package; 16 leads; body width 7.5 mm **SOT162-1**

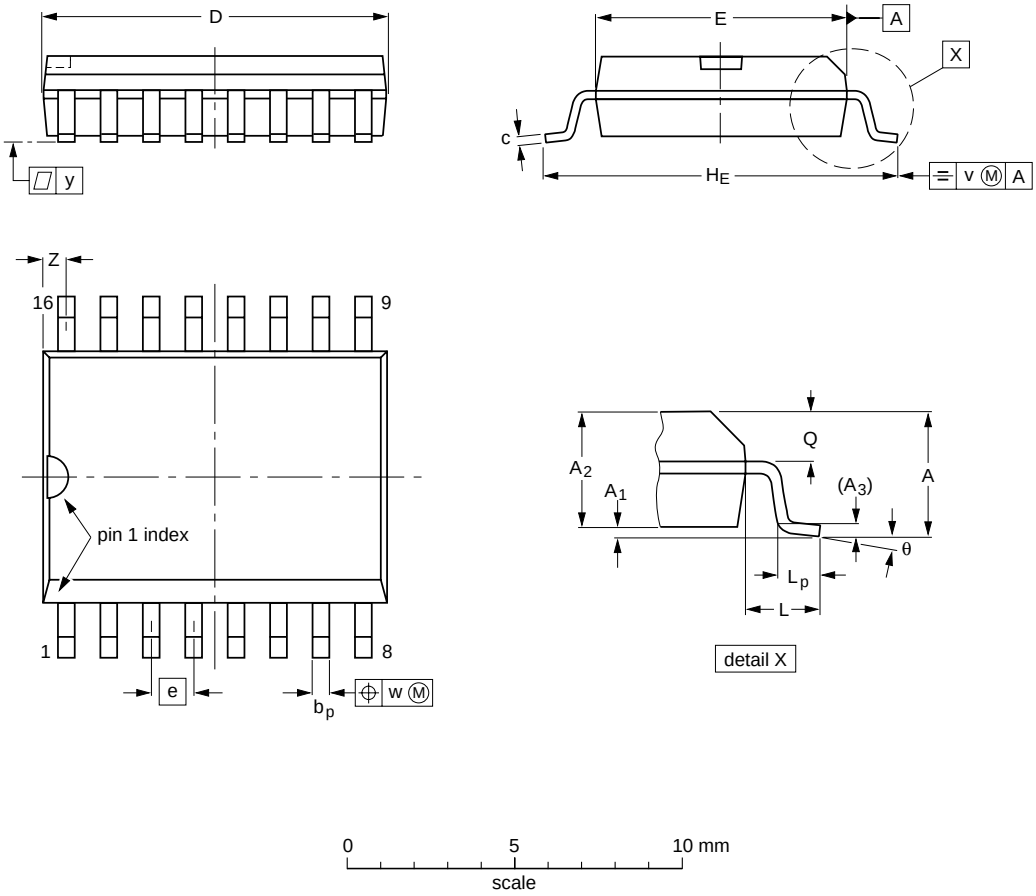

DIMENSIONS (inch dimensions are derived from the original mm dimensions)

UNIT	A max.	A_1	A_2	A_3	b_p	c	D (1)	E (1)	e	H_E	L	L_p	Q	v	w	y	Z (1)	θ
mm	2.65	0.30 0.10	2.45 2.25	0.25	0.49 0.36	0.32 0.23	10.5 10.1	7.6 7.4	1.27	10.65 10.00	1.4	1.1 0.4	1.1 1.0	0.25	0.25	0.1	0.9 0.4	8° 0°
inches	0.10	0.012 0.004	0.096 0.089	0.01	0.019 0.014	0.013 0.009	0.41 0.40	0.30 0.29	0.050	0.419 0.394	0.055	0.043 0.016	0.043 0.039	0.01	0.01	0.004	0.035 0.016	

Note

1. Plastic or metal protrusions of 0.15 mm maximum per side are not included.

OUTLINE VERSION	REFERENCES				EUROPEAN PROJECTION	ISSUE DATE
	IEC	JEDEC	EIAJ			
SOT162-1	075E03	MS-013AA				~~95-01-24~~ 97-05-22

SSOP20: plastic shrink small outline package; 20 leads; body width 4.4 mm **SOT266-1**

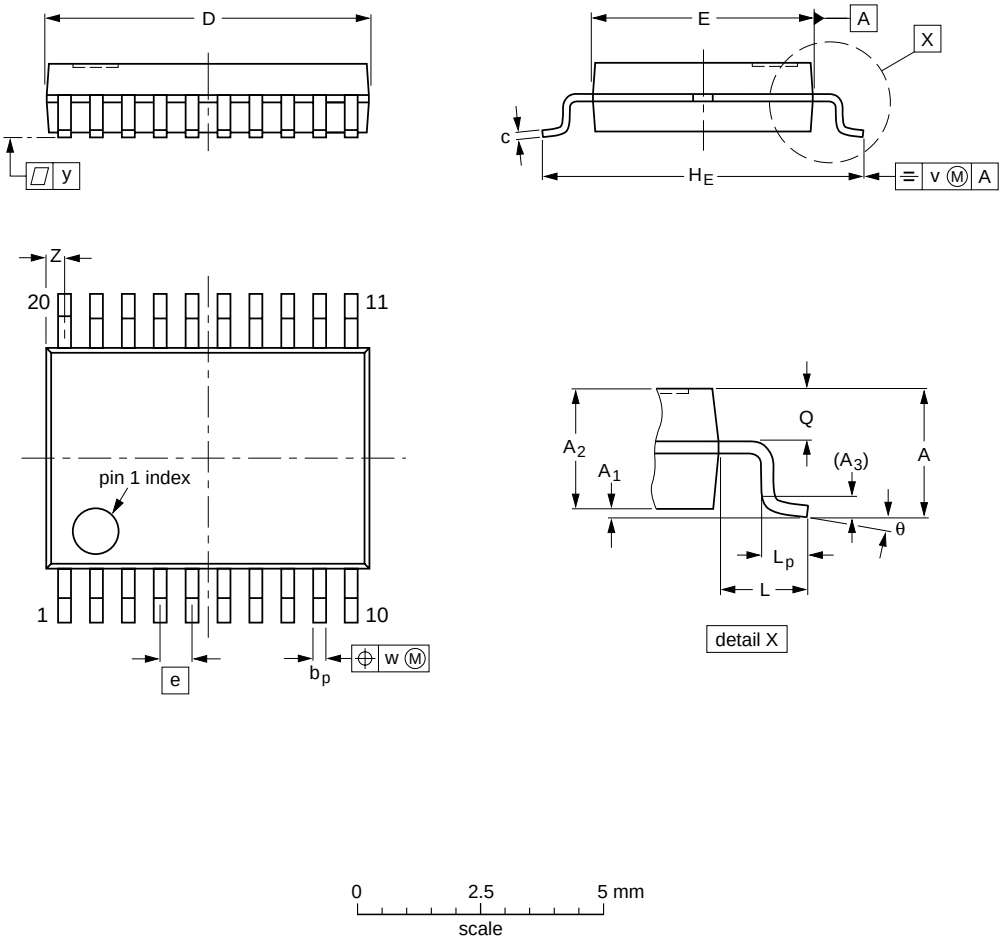

DIMENSIONS (mm are the original dimensions)

UNIT	A max.	A_1	A_2	A_3	b_p	c	$D^{(1)}$	$E^{(1)}$	e	H_E	L	L_p	Q	v	w	y	$Z^{(1)}$	θ
mm	1.5	0.15 0	1.4 1.2	0.25	0.32 0.20	0.20 0.13	6.6 6.4	4.5 4.3	0.65	6.6 6.2	1.0	0.75 0.45	0.65 0.45	0.2	0.13	0.1	0.48 0.18	10° 0°

Note

1. Plastic or metal protrusions of 0.20 mm maximum per side are not included.

OUTLINE VERSION	REFERENCES					EUROPEAN PROJECTION	ISSUE DATE
	IEC	JEDEC	EIAJ				
SOT266-1							~~90-04-05~~ 95-02-25

13 SOLDERING

13.1 Introduction

There is no soldering method that is ideal for all IC packages. Wave soldering is often preferred when through-hole and surface mounted components are mixed on one printed-circuit board. However, wave soldering is not always suitable for surface mounted ICs, or for printed-circuits with high population densities. In these situations reflow soldering is often used.

This text gives a very brief insight to a complex technology. A more in-depth account of soldering ICs can be found in our *"IC Package Databook"* (order code 9398 652 90011).

13.2 DIP

13.2.1 Soldering by dipping or by wave

The maximum permissible temperature of the solder is 260 °C; solder at this temperature must not be in contact with the joint for more than 5 seconds. The total contact time of successive solder waves must not exceed 5 seconds.

The device may be mounted up to the seating plane, but the temperature of the plastic body must not exceed the specified maximum storage temperature ($T_{stg\ max}$). If the printed-circuit board has been pre-heated, forced cooling may be necessary immediately after soldering to keep the temperature within the permissible limit.

13.2.2 Repairing soldered joints

Apply a low voltage soldering iron (less than 24 V) to the lead(s) of the package, below the seating plane or not more than 2 mm above it. If the temperature of the soldering iron bit is less than 300 °C it may remain in contact for up to 10 seconds. If the bit temperature is between 300 and 400 °C, contact may be up to 5 seconds.

13.3 SO and SSOP

13.3.1 Reflow soldering

Reflow soldering techniques are suitable for all SO and SSOP packages.

Reflow soldering requires solder paste (a suspension of fine solder particles, flux and binding agent) to be applied to the printed-circuit board by screen printing, stencilling or pressure-syringe dispensing before package placement.

Several techniques exist for reflowing; for example, thermal conduction by heated belt. Dwell times vary between 50 and 300 seconds depending on heating method. Typical reflow temperatures range from 215 to 250 °C.

Preheating is necessary to dry the paste and evaporate the binding agent. Preheating duration: 45 minutes at 45 °C.

13.3.2 Wave soldering

Wave soldering is **not** recommended for SSOP packages. This is because of the likelihood of solder bridging due to closely-spaced leads and the possibility of incomplete solder penetration in multi-lead devices.

If wave soldering cannot be avoided, the following conditions must be observed:

- **A double-wave (a turbulent wave with high upward pressure followed by a smooth laminar wave) soldering technique should be used.**
- **The longitudinal axis of the package footprint must be parallel to the solder flow and must incorporate solder thieves at the downstream end.**

Even with these conditions, only consider wave soldering SSOP packages that have a body width of 4.4 mm, that is SSOP16 (SOT369-1) or SSOP20 (SOT266-1).

During placement and before soldering, the package must be fixed with a droplet of adhesive. The adhesive can be applied by screen printing, pin transfer or syringe dispensing. The package can be soldered after the adhesive is cured.

Maximum permissible solder temperature is 260 °C, and maximum duration of package immersion in solder is 10 seconds, if cooled to less than 150 °C within 6 seconds. Typical dwell time is 4 seconds at 250 °C.

A mildly-activated flux will eliminate the need for removal of corrosive residues in most applications.

13.3.3 Repairing soldered joints

Fix the component by first soldering two diagonally-opposite end leads. Use only a low voltage soldering iron (less than 24 V) applied to the flat part of the lead. Contact time must be limited to 10 seconds at up to 300 °C. When using a dedicated tool, all other leads can be soldered in one operation within 2 to 5 seconds between 270 and 320 °C.

14 DEFINITIONS

Data sheet status	
Objective specification	This data sheet contains target or goal specifications for product development.
Preliminary specification	This data sheet contains preliminary data; supplementary data may be published later.
Product specification	This data sheet contains final product specifications.
Limiting values	
Limiting values given are in accordance with the Absolute Maximum Rating System (IEC 134). Stress above one or more of the limiting values may cause permanent damage to the device. These are stress ratings only and operation of the device at these or at any other conditions above those given in the Characteristics sections of the specification is not implied. Exposure to limiting values for extended periods may affect device reliability.	
Application information	
Where application information is given, it is advisory and does not form part of the specification.	

15 LIFE SUPPORT APPLICATIONS

These products are not designed for use in life support appliances, devices, or systems where malfunction of these products can reasonably be expected to result in personal injury. Philips customers using or selling these products for use in such applications do so at their own risk and agree to fully indemnify Philips for any damages resulting from such improper use or sale.

16 PURCHASE OF PHILIPS I²C COMPONENTS

Purchase of Philips I²C components conveys a license under the Philips' I²C patent to use the components in the I²C system provided the system conforms to the I²C specification defined by Philips. This specification can be ordered using the code 9398 393 40011.

NOTES

NOTES

NOTES

Philips Semiconductors – a worldwide company

Argentina: see South America

Australia: 34 Waterloo Road, NORTH RYDE, NSW 2113,
Tel. +61 2 9805 4455, Fax. +61 2 9805 4466

Austria: Computerstr. 6, A-1101 WIEN, P.O. Box 213,
Tel. +43 1 60 101, Fax. +43 1 60 101 1210

Belarus: Hotel Minsk Business Center, Bld. 3, r. 1211, Volodarski Str. 6,
220050 MINSK, Tel. +375 172 200 733, Fax. +375 172 200 773

Belgium: see The Netherlands

Brazil: see South America

Bulgaria: Philips Bulgaria Ltd., Energoproject, 15th floor,
51 James Bourchier Blvd., 1407 SOFIA,
Tel. +359 2 689 211, Fax. +359 2 689 102

Canada: PHILIPS SEMICONDUCTORS/COMPONENTS,
Tel. +1 800 234 7381

China/Hong Kong: 501 Hong Kong Industrial Technology Centre,
72 Tat Chee Avenue, Kowloon Tong, HONG KONG,
Tel. +852 2319 7888, Fax. +852 2319 7700

Colombia: see South America

Czech Republic: see Austria

Denmark: Prags Boulevard 80, PB 1919, DK-2300 COPENHAGEN S,
Tel. +45 32 88 2636, Fax. +45 31 57 1949

Finland: Sinikalliontie 3, FIN-02630 ESPOO,
Tel. +358 9 615800, Fax. +358 9 61580/xxx

France: 4 Rue du Port-aux-Vins, BP317, 92156 SURESNES Cedex,
Tel. +33 1 40 99 6161, Fax. +33 1 40 99 6427

Germany: Hammerbrookstraße 69, D-20097 HAMBURG,
Tel. +49 40 23 53 60, Fax. +49 40 23 536 300

Greece: No. 15, 25th March Street, GR 17778 TAVROS/ATHENS,
Tel. +30 1 4894 339/239, Fax. +30 1 4814 240

Hungary: see Austria

India: Philips INDIA Ltd, Shivsagar Estate, A Block, Dr. Annie Besant Rd.
Worli, MUMBAI 400 018, Tel. +91 22 4938 541, Fax. +91 22 4938 722

Indonesia: see Singapore

Ireland: Newstead, Clonskeagh, DUBLIN 14,
Tel. +353 1 7640 000, Fax. +353 1 7640 200

Israel: RAPAC Electronics, 7 Kehilat Saloniki St, TEL AVIV 61180,
Tel. +972 3 645 0444, Fax. +972 3 649 1007

Italy: PHILIPS SEMICONDUCTORS, Piazza IV Novembre 3,
20124 MILANO, Tel. +39 2 6752 2531, Fax. +39 2 6752 2557

Japan: Philips Bldg 13-37, Kohnan 2-chome, Minato-ku, TOKYO 108,
Tel. +81 3 3740 5130, Fax. +81 3 3740 5077

Korea: Philips House, 260-199 Itaewon-dong, Yongsan-ku, SEOUL,
Tel. +82 2 709 1412, Fax. +82 2 709 1415

Malaysia: No. 76 Jalan Universiti, 46200 PETALING JAYA, SELANGOR,
Tel. +60 3 750 5214, Fax. +60 3 757 4880

Mexico: 5900 Gateway East, Suite 200, EL PASO, TEXAS 79905,
Tel. +9-5 800 234 7381

Middle East: see Italy

Netherlands: Postbus 90050, 5600 PB EINDHOVEN, Bldg. VB,
Tel. +31 40 27 82785, Fax. +31 40 27 88399

New Zealand: 2 Wagener Place, C.P.O. Box 1041, AUCKLAND,
Tel. +64 9 849 4160, Fax. +64 9 849 7811

Norway: Box 1, Manglerud 0612, OSLO,
Tel. +47 22 74 8000, Fax. +47 22 74 8341

Philippines: Philips Semiconductors Philippines Inc.,
106 Valero St. Salcedo Village, P.O. Box 2108 MCC, MAKATI,
Metro MANILA, Tel. +63 2 816 6380, Fax. +63 2 817 3474

Poland: Ul. Lukiska 10, PL 04-123 WARSZAWA,
Tel. +48 22 612 2831, Fax. +48 22 612 2327

Portugal: see Spain

Romania: see Italy

Russia: Philips Russia, Ul. Usatcheva 35A, 119048 MOSCOW,
Tel. +7 095 755 6918, Fax. +7 095 755 6919

Singapore: Lorong 1, Toa Payoh, SINGAPORE 1231,
Tel. +65 350 2538, Fax. +65 251 6500

Slovakia: see Austria

Slovenia: see Italy

South Africa: S.A. PHILIPS Pty Ltd., 195-215 Main Road Martindale,
2092 JOHANNESBURG, P.O. Box 7430 Johannesburg 2000,
Tel. +27 11 470 5911, Fax. +27 11 470 5494

South America: Rua do Rocio 220, 5th floor, Suite 51,
04552-903 São Paulo, SÃO PAULO - SP, Brazil,
Tel. +55 11 821 2333, Fax. +55 11 829 1849

Spain: Balmes 22, 08007 BARCELONA,
Tel. +34 3 301 6312, Fax. +34 3 301 4107

Sweden: Kottbygatan 7, Akalla, S-16485 STOCKHOLM,
Tel. +46 8 632 2000, Fax. +46 8 632 2745

Switzerland: Allmendstrasse 140, CH-8027 ZÜRICH,
Tel. +41 1 488 2686, Fax. +41 1 481 7730

Taiwan: Philips Semiconductors, 6F, No. 96, Chien Kuo N. Rd., Sec. 1,
TAIPEI, Taiwan Tel. +886 2 2134 2870, Fax. +886 2 2134 2874

Thailand: PHILIPS ELECTRONICS (THAILAND) Ltd.,
209/2 Sanpavuth-Bangna Road Prakanong, BANGKOK 10260,
Tel. +66 2 745 4090, Fax. +66 2 398 0793

Turkey: Talatpasa Cad. No. 5, 80640 GÜLTEPE/ISTANBUL,
Tel. +90 212 279 2770, Fax. +90 212 282 6707

Ukraine: PHILIPS UKRAINE, 4 Patrice Lumumba str., Building B, Floor 7,
252042 KIEV, Tel. +380 44 264 2776, Fax. +380 44 268 0461

United Kingdom: Philips Semiconductors Ltd., 276 Bath Road, Hayes,
MIDDLESEX UB3 5BX, Tel. +44 181 730 5000, Fax. +44 181 754 8421

United States: 811 East Arques Avenue, SUNNYVALE, CA 94088-3409,
Tel. +1 800 234 7381

Uruguay: see South America

Vietnam: see Singapore

Yugoslavia: PHILIPS, Trg N. Pasica 5/v, 11000 BEOGRAD,
Tel. +381 11 625 344, Fax.+381 11 635 777

For all other countries apply to: Philips Semiconductors, Marketing & Sales Communications,
Building BE-p, P.O. Box 218, 5600 MD EINDHOVEN, The Netherlands, Fax. +31 40 27 24825

Internet: http://www.semiconductors.philips.com

© Philips Electronics N.V. 1997

SCA53

All rights are reserved. Reproduction in whole or in part is prohibited without the prior written consent of the copyright owner.

The information presented in this document does not form part of any quotation or contract, is believed to be accurate and reliable and may be changed without notice. No liability will be accepted by the publisher for any consequence of its use. Publication thereof does not convey nor imply any license under patent- or other industrial or intellectual property rights.

Printed in The Netherlands 417067/1200/02/pp24 Date of release: 1997 Apr 02 Document order number: 9397 750 01758

Let's make things better.

Philips Semiconductors

PHILIPS