Your Expert Partner for **Human Machine Interfaces**

Actuator

Distribution by
Rs-online

61-
0000.02



https://rs-online.eao.com/component/61-0000.0...

Your product:



61-0000.02
Actuator

MOUNTING

Mounting type:	Panel mounting

MECHANICAL CHARACTERISTICS

Terminal:	Plug-in terminal, 2.8 x 0.5 mm
Tightening torque:	Max. 0.5 Nm
Weight:	0.006 kg

AMBIENT CONDITION

IP Protection:	IP40 rear side, according to EN IEC 60529, IP67 front side, according to EN IEC 60529
Operating temperature:	– 25 °C ... + 55 °C
Storage temperature:	– 40 °C ... + 85 °C

CERTIFICATE

REACH:	REACH compliant
RoHS:	RoHS compliant

OTHER

Short Description:	Actuator, Plug-in terminal, 2.8 x 0.5 mm
Housing material:	Plastic, according to UL 94 V0, self-extinguishing
Wiring diagrams:	

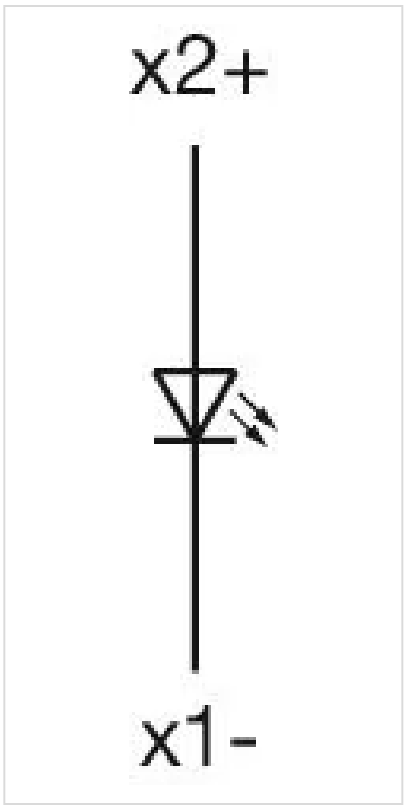

Mounting cut-outs:

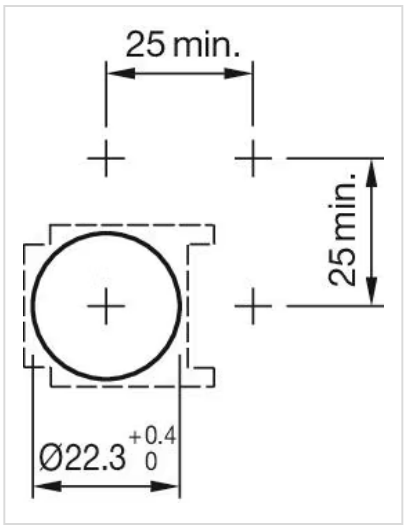

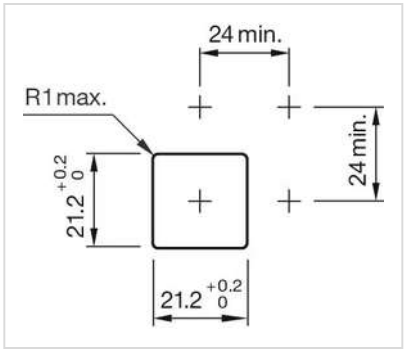

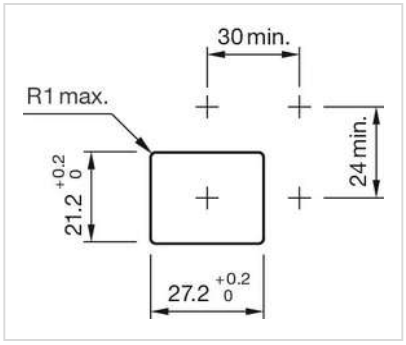

Dimension drawings:

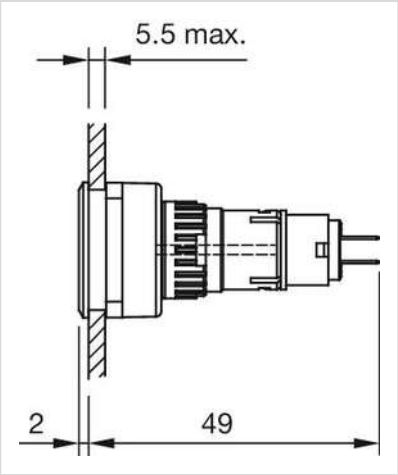
5.5 max.
2
49

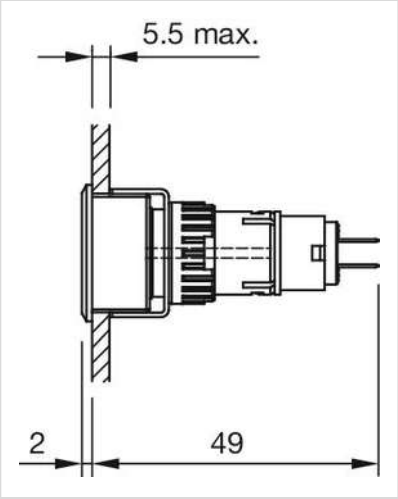
5.5 max.
2
49