Traffic Lights / LED Light / LED Traffic Light 890

LED Perm. Beacon BWM 115-230VAC YE



Part No.: 890.320.68

MECHANICAL DATA	
Length	154 mm
Height	168 mm
Diameter	150 mm
Materials	PC PC/ABS
Dome colour	Clear
Housing colour	Grey
Protection category	IP65
Connection	Spring-type terminal
cross-sectional area minimum	0,50mm² / 20AWG
cross-sectional area maximum	1,50mm² / 16AWG
Cable entry	Screwed cable gland
Cable entry minimum	d = 5 mm d = 6 mm
Cable entry maximum	d = 12 mm d = 7 mm
Tension relief	Present (conforms to VDE)
Type of fixing	Base mounting Wall mounting
Working temperature minimum	-30°C
Working temperature maximum	+50°C
Weight with packaging	548 g
Product weight	476 g

ELECTRICAL DATA	
Operating voltage	115-230V
Operating voltage type	AC
Operating voltage frequency	50Hz at 230V 60Hz at 115V
Operating voltage tolerance	+/- 10%
Rated operational voltage	230 VAC
Rated operational current	35 mA
Rated inrush current	300 mA
Protection class	Protection class 2
Pollution degree	3
Overvoltage category	II
Isolation voltage	Ui = 250V; Uimp = 2.500V

OPTICAL DATA	
Light source	LED

! For additional installation and mounting information, refer to the appropriate user guide at www.werma.com. This printed copy is for information only and is subject to alteration.

Traffic Lights / LED Light / LED Traffic Light 890

LED Perm. Beacon BWM 115-230VAC YE

Light colour	Yellow
Optical signal image	Permanent
Service life optical	50,000 h maximum

APPROVAL DATA	
Conforms with CE	Yes
WEEE	Yes
Conforms with ATEX-directive	No
Conforms with CCC	Yes
Conforms with UL	No
Conforms with FCC	No
Conforms with IC	No
EAC certificate available	Yes
Conforms with UKCA (Importer)	Yes (WERMA (UK) Ltd.)
Conforms with AS-I	No
ICAO Certification	No
Conforms with DNV	No
Conforms with RoHS CN	No
Conforms with VdS	No

! For additional installation and mounting information, refer to the appropriate user guide at www.werma.com. This printed copy is for information only and is subject to alteration.

Traffic Lights / LED Light / LED Traffic Light 890

LED Perm. Beacon BWM 115-230VAC YE

DRAWING

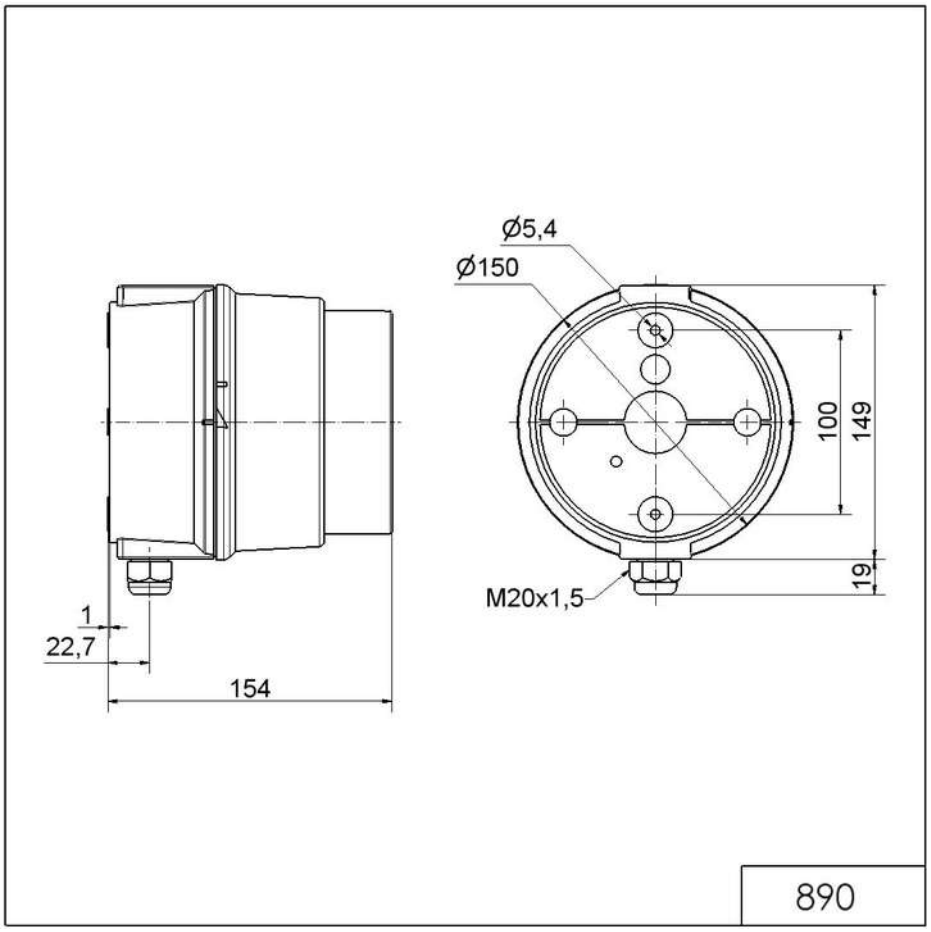

! For additional installation and mounting information, refer to the appropriate user guide at www.werma.com. This printed copy is for information only and is subject to alteration.