Operating Instructions

Pressure sensor with ceramic measuring cell

VEGABAR 28

Two-wire 4 … 20 mA



Document ID: 57086

Contents

1 About this document 4
- 1.1 Function 4
- 1.2 Target group 4
- 1.3 Symbols used 4

2 For your safety 5
- 2.1 Authorised personnel 5
- 2.2 Appropriate use 5
- 2.3 Warning about incorrect use 5
- 2.4 General safety instructions 5
- 2.5 Installation and operation in the USA and Canada 5

3 Product description 7
- 3.1 Configuration 7
- 3.2 Principle of operation 9
- 3.3 Adjustment 11
- 3.4 Packaging, transport and storage 12
- 3.5 Accessories 13

4 Mounting 14
- 4.1 General instructions 14
- 4.2 Process pressure measurement 16
- 4.3 Level measurement 17

5 Connecting to power supply 18
- 5.1 Preparing the connection 18
- 5.2 Connection procedure 18
- 5.3 Wiring plan 21
- 5.4 Switch-on phase 22

6 Access protection 23
- 6.1 Bluetooth radio interface 23
- 6.2 Protection of the parameterization 23
- 6.3 Storing the codes in myVEGA 24

7 Setup with smartphone/tablet (Bluetooth) 25
- 7.1 Preparations 25
- 7.2 Connecting 25
- 7.3 Sensor parameter adjustment 26

8 Setup with PC/notebook (Bluetooth) 27
- 8.1 Preparations 27
- 8.2 Connecting 27
- 8.3 Parameter adjustment 28

9 Menu overview 29
- 9.1 VEGA Tools app and DTM (Bluetooth) 29

10 Diagnostics and servicing 31
- 10.1 Maintenance 31
- 10.2 Rectify faults 31
- 10.3 Diagnosis, fault messages 32
- 10.4 Status messages according to NE 107 32

57086-EN-210301

10.5 Software update 34
10.6 How to proceed if a repair is necessary 35

11 Dismount 36
11.1 Dismounting steps 36
11.2 Disposal 36

12 Certificates and approvals 37
12.1 Radio licenses 37
12.2 Approvals for Ex areas 37
12.3 Approvals as overfill protection 37
12.4 Food and pharmaceutical certificates 37
12.5 EU conformity 37
12.6 NAMUR recommendations 37
12.7 Environment management system 38

13 Supplement 39
13.1 Technical data 39
13.2 Dimensions 47
13.3 Industrial property rights 52
13.4 Licensing information for open source software 52
13.5 Trademark 52

Safety instructions for Ex areas

Take note of the Ex specific safety instructions for Ex applications. These instructions are attached as documents to each instrument with Ex approval and are part of the operating instructions.

Editing status: 2021-02-25

57086-EN-210301

1 About this document

1.1 Function

This instruction provides all the information you need for mounting, connection and setup as well as important instructions for maintenance, fault rectification, the exchange of parts and the safety of the user. Please read this information before putting the instrument into operation and keep this manual accessible in the immediate vicinity of the device.

1.2 Target group

This operating instructions manual is directed to trained personnel. The contents of this manual must be made available to the qualified personnel and implemented.

1.3 Symbols used



Document ID
This symbol on the front page of this instruction refers to the Document ID. By entering the Document ID on www.vega.com you will reach the document download.



Information, note, tip: This symbol indicates helpful additional information and tips for successful work.



Note: This symbol indicates notes to prevent failures, malfunctions, damage to devices or plants.



Caution: Non-observance of the information marked with this symbol may result in personal injury.



Warning: Non-observance of the information marked with this symbol may result in serious or fatal personal injury.



Danger: Non-observance of the information marked with this symbol results in serious or fatal personal injury.



Ex applications
This symbol indicates special instructions for Ex applications.

- **List**
  The dot set in front indicates a list with no implied sequence.

1. **Sequence of actions**
   Numbers set in front indicate successive steps in a procedure.



Battery disposal
This symbol indicates special information about the disposal of batteries and accumulators.

57086-EN-210301

2 For your safety

2.1 Authorised personnel

All operations described in this documentation must be carried out only by trained, qualified personnel authorised by the plant operator.

During work on and with the device, the required personal protective equipment must always be worn.

2.2 Appropriate use

The VEGABAR 28 is a pressure transmitter for process pressure and hydrostatic level measurement.

You can find detailed information about the area of application in chapter " *Product description*".

Operational reliability is ensured only if the instrument is properly used according to the specifications in the operating instructions manual as well as possible supplementary instructions.

2.3 Warning about incorrect use

Inappropriate or incorrect use of this product can give rise to application-specific hazards, e.g. vessel overfill through incorrect mounting or adjustment. Damage to property and persons or environmental contamination can result. Also, the protective characteristics of the instrument can be impaired.

2.4 General safety instructions

This is a state-of-the-art instrument complying with all prevailing regulations and directives. The instrument must only be operated in a technically flawless and reliable condition. The operator is responsible for the trouble-free operation of the instrument. When measuring aggressive or corrosive media that can cause a dangerous situation if the instrument malfunctions, the operator has to implement suitable measures to make sure the instrument is functioning properly.

The safety instructions in this operating instructions manual, the national installation standards as well as the valid safety regulations and accident prevention rules must be observed by the user.

For safety and warranty reasons, any invasive work on the device beyond that described in the operating instructions manual may be carried out only by personnel authorised by the manufacturer. Arbitrary conversions or modifications are explicitly forbidden. For safety reasons, only the accessory specified by the manufacturer must be used.

To avoid any danger, the safety approval markings and safety tips on the device must also be observed.

2.5 Installation and operation in the USA and Canada

This information is only valid for USA and Canada. Hence the following text is only available in the English language.

Installations in the US shall comply with the relevant requirements of the National Electrical Code (ANSI/NFPA 70).

Installations in Canada shall comply with the relevant requirements of the Canadian Electrical Code.

3 Product description

3.1 Configuration

Scope of delivery

The scope of delivery encompasses:

- VEGABAR 28 pressure transmitter
- Information sheet " *Documents and software*" with:
  - Instrument serial number
  - QR code with link for direct scanning
- Information sheet " *PINs and Codes*" (with Bluetooth versions) with:
  - Bluetooth access code
- Information sheet " *Access protection*" (with Bluetooth versions) with:
  - Bluetooth access code
  - Emergency Bluetooth unlock code
  - Emergency device code

The further scope of delivery encompasses:

- Documentation
  - Quick setup guide VEGABAR 28
  - Ex-specific " *Safety instructions*" (with Ex versions)
  - Radio approvals (versions with Bluetooth)
  - If necessary, further certificates

Note:
Optional instrument features are also described in this operating instructions manual. The respective scope of delivery results from the order specification.

Scope of this operating instructions

This operating instructions manual applies to the following instrument versions:

- Hardware version from 1.0.0
- Software version from 1.3.0

Constituent parts

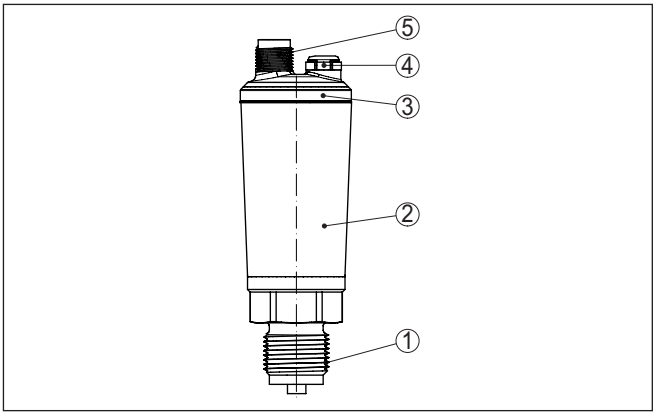

Fig. 1: Components of VEGABAR 28

1 *Process fitting*
2 *Electronics housing*
3 *LED illuminated ring*
4 *Ventilation/pressure compensation*
5 *Plug connector*

Type label

The type label contains the most important data for identification and use of the instrument.

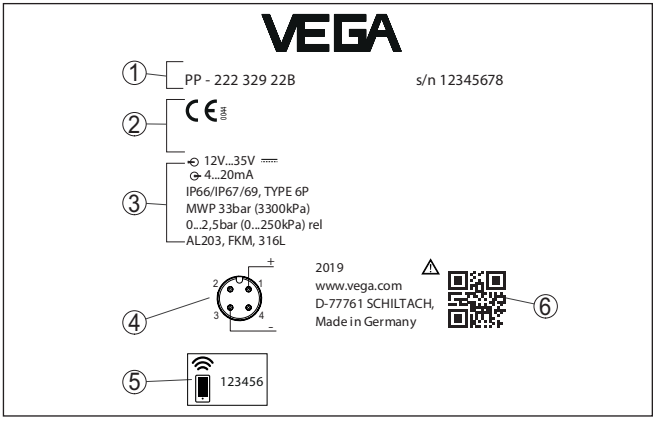

Fig. 2: Layout of the type label (example)

1 *Order/Serial number*
2 *Field for approvals*
3 *Technical data*
4 *Assignment*
5 *Bluetooth access code*
6 *QR code for device documentation*

Documents and software

Move to " www.vega.com" and enter in the search field the serial number of your instrument.

There you can find the following information about the instrument:

- Order data
- Documentation
- Software

Alternatively, you can find all via your smartphone:

- Scan the QR-code on the type label of the device or
- Enter serial number manually in the VEGA Tools app (available free of charge in the respective stores)

3.2 Principle of operation

Application area

VEGABAR 28 is suitable for applications in virtually all industries. It is used for the measurement of the following pressure types.

- Gauge pressure
- Absolute pressure
- Vacuum

Measured products

Measured products are gases, vapours and liquids.

Depending on the process fitting and measurement setup, measured products can be also viscous or contain abrasive substances.

Measured variables

The VEGABAR 28 is suitable for the measurement of the following process variables:

- Process pressure
- Level

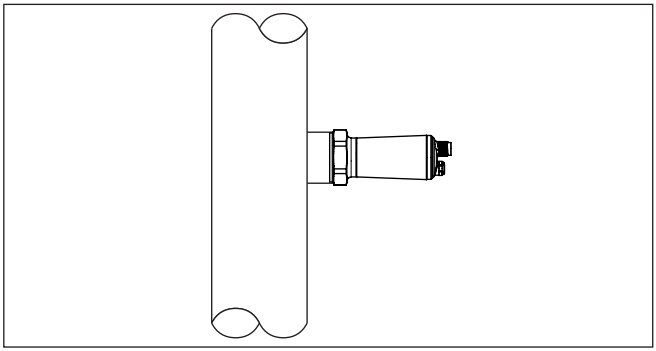

Fig. 3: Process pressure measurement VEGABAR 28

Measuring system pressure

The sensor element is the Mini-CERTEC® measuring cell with robust ceramic diaphragm. The process pressure deflects the ceramic diaphragm and causes a capacitance change in the measuring cell. This capacitance change is converted into an electrical signal and outputted as measured value via the output signal.

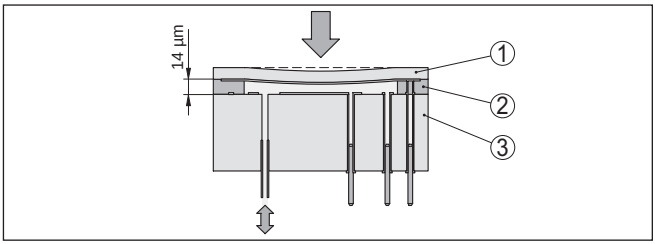

Fig. 4: Configuration of the Mini-CERTEC® measuring cell

1 Process diaphragm
2 Glass joint
3 Base element

Measuring system temperature

A temperature sensor in the electronics of the Mini-CERTEC® measuring cell measures the current process temperature. The temperature value is output via Bluetooth.

Pressure types

Relative pressure: the measuring cell is open to the atmosphere. The ambient pressure is detected in the measuring cell and compensated. It thus has no influence on the measured value.

Absolute pressure: the measuring cell contains vacuum and is encapsulated. The ambient pressure is not compensated and does hence influence the measured value.

Recessed installation

The recessed installation is particularly suitable for applications with gases, vapours and clear liquids. The measuring cell seals are positioned laterally as well as in front.

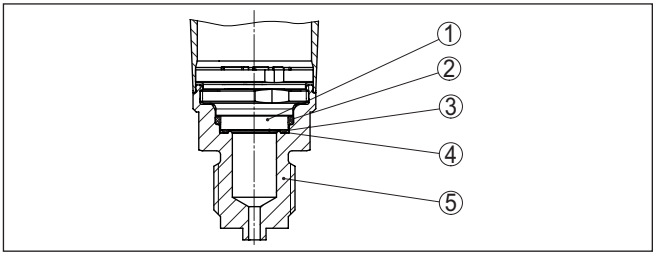

Fig. 5: Recessed installation of the measuring cell (example: manometer connection G½)

1 Measuring cell
2 Lateral measuring cell seal
3 Front measuring cell seal
4 Diaphragm
5 Process fitting

Front flush installation

The front-flush installation is particularly suitable for applications with viscous or abrasive media and for buildup.

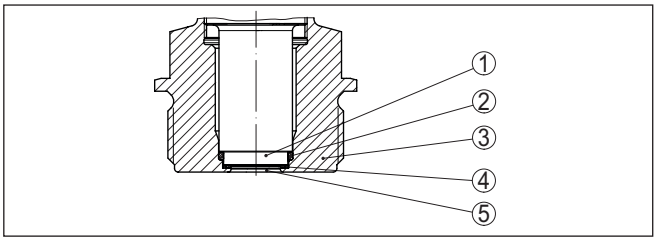

Fig. 6: Front-flush installation of the measuring cell (example: thread G1½)

1 Measuring cell
2 Lateral measuring cell seal
3 Front measuring cell seal
4 Process fitting
5 Diaphragm

Front-flush installation in hygienic fitting

The front-flush, hygienic installation of the measuring cell is particularly suitable for food applications. The front seal is installed gap-free.

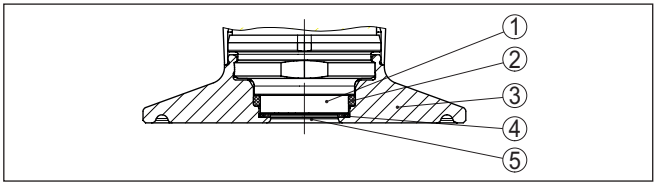

Fig. 7: Hygienic installation of the measuring cell (example: Clamp 2")

1 Measuring cell
2 Lateral measuring cell seal
3 Process fitting
4 Front measuring cell seal
5 Diaphragm

3.3 Adjustment

Wireless adjustment

Devices with integrated Bluetooth module can be adjusted wirelessly via standard adjustment tools: [1)]

- Smartphone/tablet (iOS or Android operating system)
- PC/notebook (Windows operating system)

[1)] Reduced effective range with M12 x 1 plug stainless steel (closed metal housing), see chapter "Technical Data"

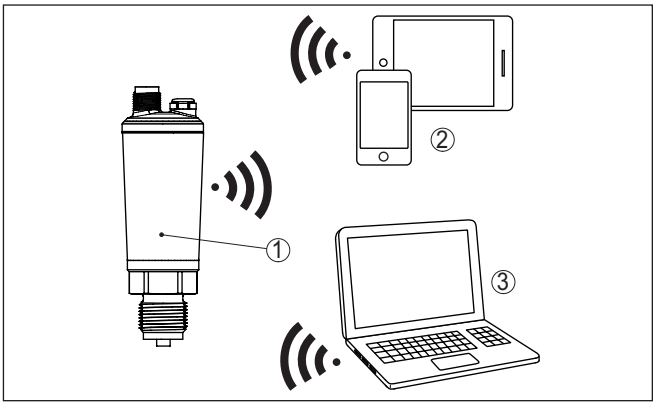

Fig. 8: Wireless connection to standard adjustment tools with integrated Bluetooth LE

1 Sensor
2 Smartphone/Tablet
3 Bluetooth USB adapter

3.4 Packaging, transport and storage

Packaging

Your instrument was protected by packaging during transport. Its capacity to handle normal loads during transport is assured by a test based on ISO 4180.

The packaging consists of environment-friendly, recyclable cardboard. For special versions, PE foam or PE foil is also used. Dispose of the packaging material via specialised recycling companies.

Transport

Transport must be carried out in due consideration of the notes on the transport packaging. Nonobservance of these instructions can cause damage to the device.

Transport inspection

The delivery must be checked for completeness and possible transit damage immediately at receipt. Ascertained transit damage or concealed defects must be appropriately dealt with.

Storage

Up to the time of installation, the packages must be left closed and stored according to the orientation and storage markings on the outside.

Unless otherwise indicated, the packages must be stored only under the following conditions:

- Not in the open
- Dry and dust free
- Not exposed to corrosive media
- Protected against solar radiation
- Avoiding mechanical shock and vibration

Storage and transport temperature

- Storage and transport temperature see chapter "*Supplement - Technical data - Ambient conditions*"

57086-EN-210301

- Relative humidity 20 … 85 %

3.5 Accessories

The instructions for the listed accessories can be found in the download area on our homepage.

Welded sockets and adapters

Welded sockets are used to connect the devices to the process.

Threaded adapters enable simple adaptation of devices with standard threaded fittings, e.g. to process-side hygiene connections.

Mounting accessories

The suitable mounting accessories for VEGABAR 28 includes siphons, blocking valves and measuring instrument holders.

4 Mounting

4.1 General instructions

Ambient conditions

The instrument is suitable for standard and extended ambient conditions acc. to DIN/EN/IEC/ANSI/ISA/UL/CSA 61010-1. It can be used indoors as well as outdoors.

Process conditions



Note:
For safety reasons, the instrument must only be operated within the permissible process conditions. You can find detailed information on the process conditions in chapter " *Technical data*" of the operating instructions or on the type label.

Hence make sure before mounting that all parts of the instrument exposed to the process are suitable for the existing process conditions.

These are mainly:

- Active measuring component
- Process fitting
- Process seal

Process conditions in particular are:

- Process pressure
- Process temperature
- Chemical properties of the medium
- Abrasion and mechanical influences

Permissible process pressure (MWP) - Device

The permissible process pressure range is specified by "MWP" (Maximum Working Pressure) on the type label, see chapter " *Structure*". The MWP takes the element of the measuring cell and processing fitting combination with the weakest pressure into consideration and may applied permanently. The specification refers to a reference temperature of +20 °C (+68 °F). It also applies when a measuring cell with a higher measuring range than the permissible pressure range of the process fitting is installed order-related.

In order to prevent damage to the device, a test pressure may only exceed the specified MWP briefly by 1.5 times at reference temperature. The pressure stage of the process fitting as well as the overload resistance of the measuring cell are taken into consideration here (see chapter " *Technical Data*").

In addition, a temperature derating of the process fitting, e. g. with flanges, can limit the permissible process pressure range according to the respective standard.

Protection against moisture

Protect your instrument against moisture ingress through the following measures:

- Use a suitable connection cable (see chapter " *Connecting to power supply*")
- Tighten the cable gland or plug connector
- Lead the connection cable downward in front of the cable entry or plug connector

57086-EN-210301

This applies mainly to outdoor installations, in areas where high humidity is expected (e.g. through cleaning processes) and on cooled or heated vessels.

Ventilation and pressure compensation

Ventilation and pressure compensation for VEGABAR 28 are provided by an air-permeable, moisture-blocking filter element.

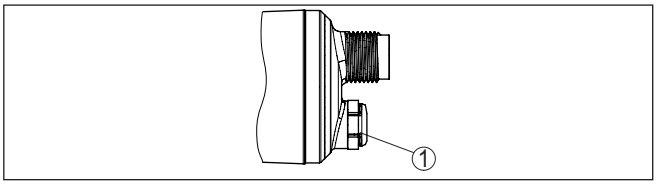

Fig. 9: Position of the filter element

1 Filter element

For effective ventilation, the filter element must always be free of buildup.

Screwing in

Devices with threaded fitting are screwed into the process fitting with a suitable wrench via the hexagon.

See chapter " *Dimensions*" for wrench size.

Warning:
The housing or the electrical connection may not be used for screwing in! Depending on the device version, tightening can cause damage, e. g. to the rotation mechanism of the housing.

Permissible process pressure (MWP) - Mounting accessory

The permissible process pressure range is stated on the type label. The instrument should only be operated with these pressures if the mounting accessory used also fulfils these values. This should be ensured by suitable flanges, welded sockets, tension rings with Clamp connections, sealings, etc.

Temperature limits

Higher process temperatures often mean also higher ambient temperatures. Make sure that the upper temperature limits stated in chapter " *Technical data*" for the environment of the electronics housing and connection cable are not exceeded.

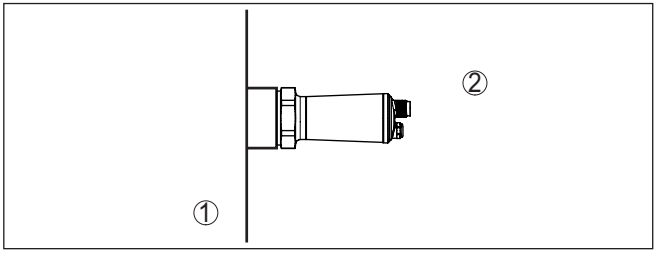

Fig. 10: Temperature ranges

1 Process temperature
2 Ambient temperature

4.2 Process pressure measurement

In gases

Keep the following in mind when setting up the measuring system:

- Mount the instrument above the measuring point

Possible condensation can then drain off into the process line.

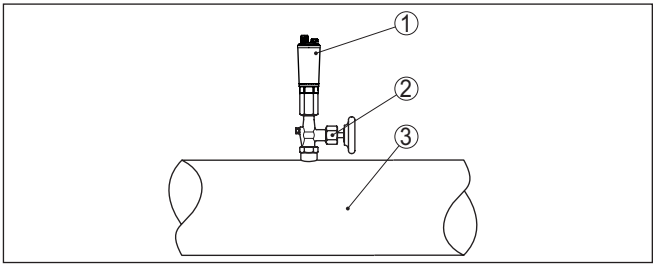

Fig. 11: Measurement setup for process pressure measurement of gases in pipelines

1 VEGABAR 28
2 Blocking valve
3 Pipeline

In vapours

Keep the following in mind when setting up the measuring system:

- Connect via a siphon

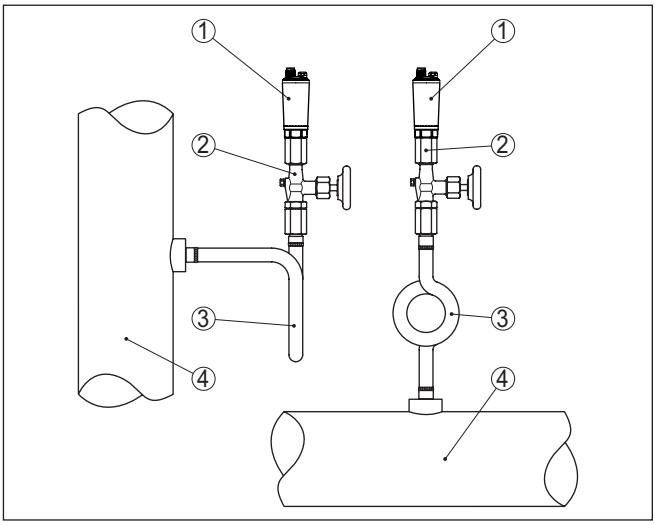

Fig. 12: Measurement setup for process pressure measurement of gases in pipelines

1 VEGABAR 28
2 Blocking valve
3 Siphon in U or circular form
4 Pipeline

57086-EN-210301

A protective accumulation of water is formed through condensation in the pipe bends. Even in applications with hot steam, a medium temperature < 100 °C on the transmitter is ensured.

In liquids

Keep the following in mind when setting up the measuring system:

- Mount the instrument below the measuring point

The effective pressure line is always filled with liquid and gas bubbles can bubble up to the process line.

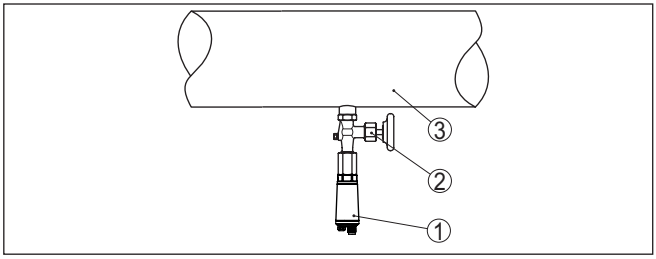

Fig. 13: Measurement setup for process pressure measurement of liquids in pipelines

1 VEGABAR 28
2 Blocking valve
3 Pipeline

4.3 Level measurement

Measurement setup

Keep the following in mind when setting up the measuring system:

- Mount the instrument below the min. level
- Do not mount the instrument close to the filling stream or emptying area
- Mount the instrument so that it is protected against pressure shocks from the stirrer

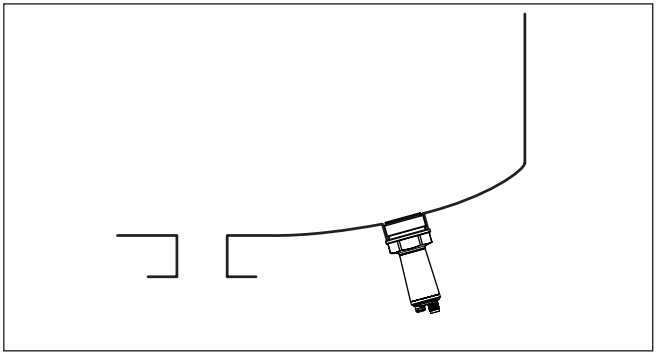

Fig. 14: Measurement setup for level measurement

5 Connecting to power supply

5.1 Preparing the connection

Safety instructions

Always keep in mind the following safety instructions:

- Carry out electrical connection by trained, qualified personnel authorised by the plant operator
- If overvoltage surges are expected, overvoltage arresters should be installed



Warning:
Only connect or disconnect in de-energized state.

Voltage supply

The data for power supply are specified in chapter " *Technical data*".



Note:
Power the instrument via an energy-limited circuit (power max. 100 W) acc. to IEC 61010-1, e.g.

- Class 2 power supply unit (acc. to UL1310)
- SELV power supply unit (safety extra-low voltage) with suitable internal or external limitation of the output current

Keep in mind the following additional factors that influence the operating voltage:

- Lower output voltage of the power supply unit under nominal load (e.g. with a sensor current of 20.5 mA or 22 mA in case of fault)
- Influence of additional instruments in the circuit (see load values in chapter " *Technical data*")

Connection cable

Use cable with round cross section. Depending on the plug connection, you have to select the outer diameter of the cable respectively so that the seal effect of the cable gland is ensured.

Depending on the connection method or signal output, the device is connected with standard two, three or four-wire cable without shielding.

5.2 Connection procedure

M12 x 1 plug

This plug connection requires a complete confectioned cable with counter plug.

Plug according to ISO 4400

Proceed as follows:

1. Loosen the screw on the rear of the plug connector
2. Remove the plug connector and seal from VEGABAR 28
3. Remove the plug insert from the plug housing

57086-EN-210301

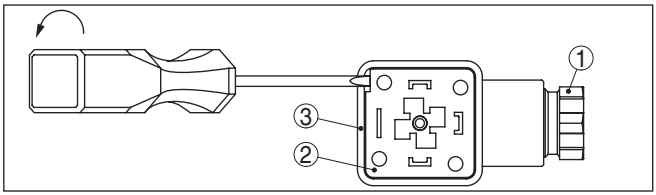

Fig. 15: Loosen the plug insert

1 Cable gland
2 Plug insert
3 Plug housing

4. Remove approx. 5 cm of the cable mantle, strip approx. 1 cm insulation from the individual wires
5. Lead the cable through the cable gland into the plug housing
6. Connect the wire ends to the screw terminals according to the wiring plan

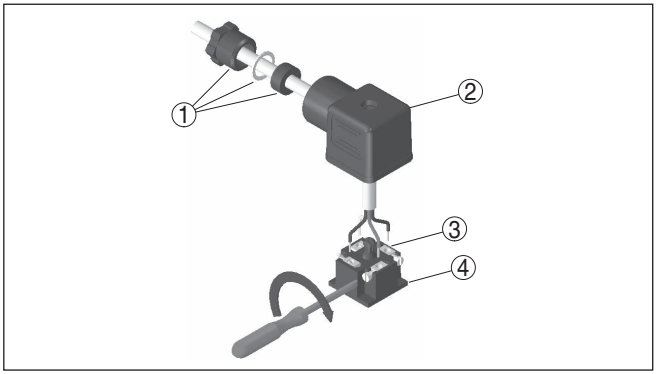

Fig. 16: Connection to the screw terminals

1 Cable gland
2 Plug housing
3 Plug insert
4 Plug seal

7. Snap the plug insert into the plug housing and insert the sensor seal
8. Plug the plug insert with seal to VEGABAR 28 and tighten the screw

The electrical connection is finished.

ISO 4400 plug with hinged cover

Proceed as follows:

1. Loosen the screw in the cover of the plug connector
2. Open the cover and remove it
3. Press the plug insert downwards
4. Loosen the screws of the strain relief and cable entry

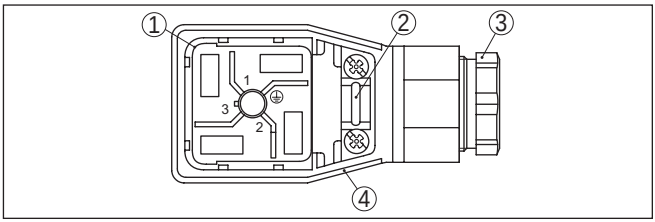

Fig. 17: Loosen the plug insert

1 Plug insert
2 Strain relief
3 Cable gland
4 Plug housing

5. Remove approx. 5 cm of the cable mantle, strip approx. 1 cm insulation from the individual wires
6. Lead the cable through the cable gland into the plug housing
7. Connect the wire ends to the screw terminals according to the wiring plan

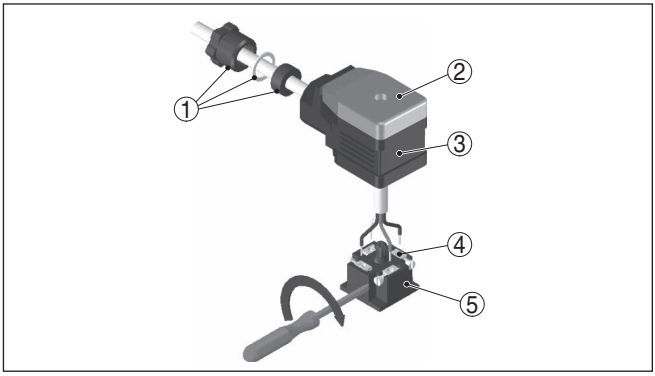

Fig. 18: Connection to the screw terminals

1 Cable gland
2 Cover
3 Plug housing
4 Plug insert
5 Plug seal

8. Snap the plug insert into the plug housing and insert the sensor seal

Information:
Note the correct arrangement, see illustration

9. Tighten the screws on the strain relief and cable entry
10. Hook in the cover and push onto the plug connection, tighten cover screw
11. Plug the plug insert with seal to VEGABAR 28 and tighten the screw

The electrical connection is finished.

Plug according to ISO 4400 with IDC method of termination

For this plug version you can use standard cable with round wire cross-section. The inner conductors do not have to be stripped. The plug connects the conductors automatically when screwing in. Cable diameter 5.5 … 8 mm, protection IP67.

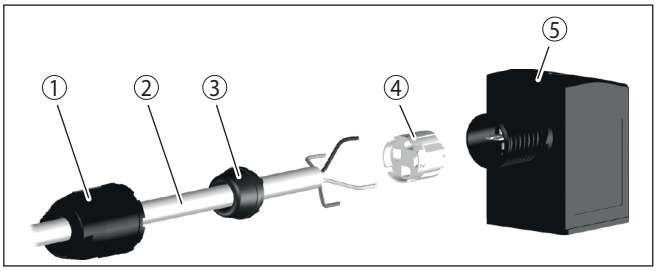

Fig. 19: Connection, valve plug ISO 4400 with IDC crimping technology

1 Compression nut
2 Cable
3 Seal ring
4 Terminal insert
5 Plug housing

5.3 Wiring plan

M12 x 1 plug

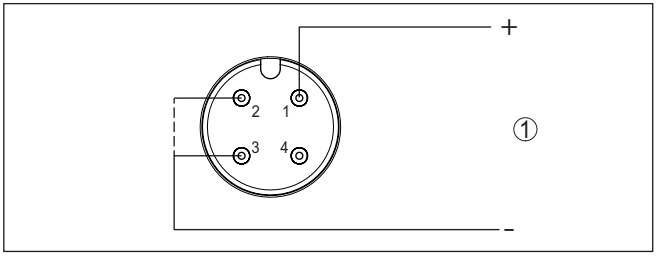

Fig. 20: Wiring plan - two-wire 4 … 20 mA - M12 x 1 plug

1 Voltage supply and signal output

Contact, plug connector	Function/Polarity
1	Voltage supply, signal output/Plus
2	Voltage supply, signal output/Minus
3	Voltage supply, signal output/Minus
4	Free

Note:
Contacts 2 and 3 are internally bridged from delivery status approx. week 17/2021. The negative supply can thus be made either on contact 2 or 3.

Plug according to ISO 4400

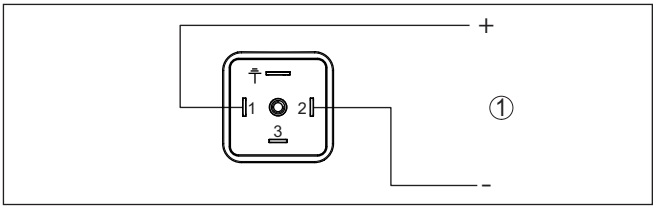

Fig. 21: Wiring plan - two-wire 4 … 20 mA - plug according to ISO 4400

1 Voltage supply and signal output

Contact, plug connector	Function/Polarity
1	Voltage supply, signal output/+
2	Voltage supply, signal output/-
3	Free
⏚	Electrically connected with metal housing

Direct cable outlet

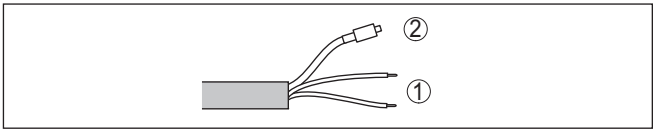

Fig. 22: Wiring plan - Two-wire 4 … 20 mA - direct cable outlet

1 Voltage supply, signal output
2 Ventilation

Wire colour	Function/Polarity
Brown	Voltage supply, signal output/Plus
Blue	Voltage supply, signal output/Minus

5.4 Switch-on phase

After switching on, the device first carries out a self-check:

- Internal check of the electronics
- The output signal jumps to the set fault current

The current measured value is then output on the signal cable.

6 Access protection

6.1 Bluetooth radio interface

Devices with a Bluetooth radio interface are protected against unwanted access from outside. This means that only authorized persons can receive measured and status values and change device settings via this interface.

Bluetooth access code

A Bluetooth access code is required to establish Bluetooth communication via the adjustment tool (smartphone/tablet/notebook). This code must be entered once when Bluetooth communication is established for the first time in the adjustment tool. It is then stored in the adjustment tool and does not have to be entered again.

The Bluetooth access code is individual for each device. It is printed on the device housing and is also supplied with the device in the information sheet " *PINs and Codes*". It can be changed by the user after the first connection has been established. If the Bluetooth access code has not been entered correctly, a new entry can only be made after a waiting period has elapsed. The waiting time increases with each additional incorrect entry.

Emergency Bluetooth unlock code

The emergency Bluetooth access code enables Bluetooth communication to be established in the event that the Bluetooth access code is no longer known. It can't be changed. The emergency Bluetooth access code can be found in information sheet " *Access protection*". If this document is lost, the emergency Bluetooth access code can be retrieved from your personal contact person after legitimation. The storage and transmission of Bluetooth access codes is always encrypted (SHA 256 algorithm).

6.2 Protection of the parameterization

The settings (parameters) of the device can be protected against unwanted changes. The parameter protection is deactivated on delivery, all settings can be made.

Device code

To protect the parameterization, the device can be locked by the user with the aid of a freely selectable device code. The settings (parameters) can then only be read out, but not changed. The device code is also stored in the adjustment tool. However, unlike the Bluetooth access code, it must be re-entered for each unlock. When using the adjustment app or DTM, the stored device code is then suggested to the user for unlocking.

Emergency device code

The emergency device code allows unlocking the device in case the device code is no longer known. It can't be changed. The emergency device code can also be found on the supplied information sheet " *Access protection*". If this document is lost, the emergency device code can be retrieved from your personal contact person after legitimation. The storage and transmission of the device codes is always encrypted (SHA 256 algorithm).

6.3 Storing the codes in myVEGA

If the user has a " *myVEGA*" account, then the Bluetooth access code as well as the device code are additionally stored in his account under " *PINs and Codes*". This greatly simplifies the use of additional adjustment tools, as all Bluetooth access and device codes are automatically synchronized when connected to the " *myVEGA*" account

7 Setup with smartphone/tablet (Bluetooth)

7.1 Preparations

System requirements

Make sure that your smartphone/tablet meets the following system requirements:

- Operating system: iOS 8 or newer
- Operating system: Android 5.1 or newer
- Bluetooth 4.0 LE or newer

Download the VEGA Tools app from the " *Apple App Store*", " *Google Play Store*" or " *Baidu Store*" to your smartphone or tablet.

7.2 Connecting

Connecting

Start the adjustment app and select the function " *Setup*". The smartphone/tablet searches automatically for Bluetooth-capable instruments in the area.

The message " *Connecting …*" is displayed.

The devices found are listed and the search is automatically continued.

Select the requested instrument in the device list.

As soon as the Bluetooth connection to a device is established, the LED display of the device in question flashes blue 4 times.

Authenticate

When establishing the connection for the first time, the operating tool and the sensor must authenticate each other. After the first correct authentication, each subsequent connection is made without a new authentication query.

Enter Bluetooth access code

For authentication, enter the 6-digit Bluetooth access code in the next menu window. You can find the code on the outside of the device housing and on the information sheet " *Pins and Codes*" in the device packaging.

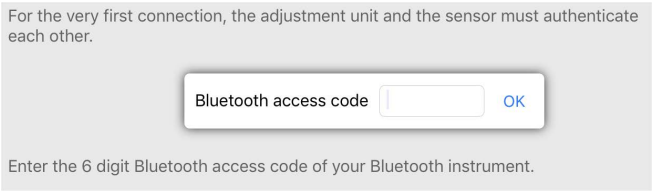

Fig. 23: Enter Bluetooth access code

Note:
If an incorrect code is entered, the code can only be entered again after a delay time. This time gets longer after each incorrect entry.

The message " *Waiting for authentication*" is displayed on the smartphone/tablet.

Connected

After connection, the sensor adjustment menu is displayed on the respective adjustment tool.

If the Bluetooth connection is interrupted, e.g. due to a too large distance between the two devices, this is displayed on the adjustment tool. The message disappears when the connection is restored.

Change device code

Parameter adjustment of the device is only possible if the parameter protection is deactivated. When delivered, parameter protection is deactivated by default and can be activated at any time.

It is recommended to enter a personal 6-digit device code. To do this, go to menu " *Extended functions*", " *Access protection*", menu item " *Protection of the parameter adjustment*".

7.3 Sensor parameter adjustment

Enter parameters

The sensor adjustment menu is divided into two halves:

On the left you'll find the navigation section with the menus " *Setup*", " *Display*", " *Diagnosis*" and others.

The selected menu item, recognisable by the colour change, is displayed in the right half.

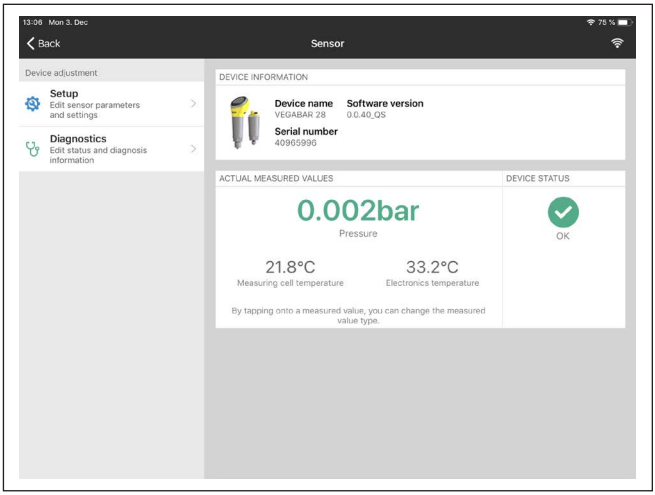

Fig. 24: Example of an app view - Setup measured values

8 Setup with PC/notebook (Bluetooth)

8.1 Preparations

System requirements

Make sure that your PC/notebook meets the following system requirements:

- Operating system Windows 10
- DTM Collection 10/2020 or newer
- Bluetooth 4.0 LE or newer

Activate Bluetooth connection

Activate the Bluetooth connection via the project assistant.

Note:
Older systems do not always have an integrated Bluetooth LE. In these cases, a Bluetooth USB adapter is required. Activate the Bluetooth USB adapter using the Project Wizard.

After activating the integrated Bluetooth or the Bluetooth USB adapter, devices with Bluetooth are found and created in the project tree.

8.2 Connecting

Connecting

Select the requested device for the online parameter adjustment in the project tree.

As soon as the Bluetooth connection to a device is established, the LED display of the device in question flashes blue 4 times.

Authenticate

When establishing the connection for the first time, the operating tool and the device must authenticate each other. After the first correct authentication, each subsequent connection is made without a new authentication query.

Enter Bluetooth access code

For authentication, enter in the next menu window the 6-digit Bluetooth access code:

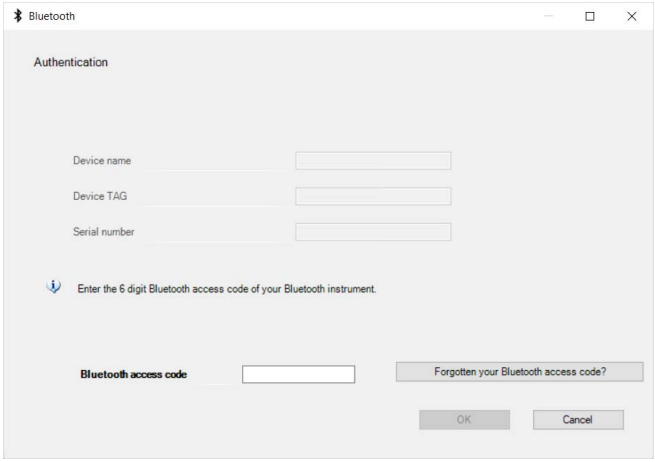

Fig. 25: Enter Bluetooth access code

You can find the code on the outside of the device housing and on the information sheet " *PINs and Codes*" in the device packaging.

Note:
If an incorrect code is entered, the code can only be entered again after a delay time. This time gets longer after each incorrect entry.

The message " *Waiting for authentication*" is displayed on the PC/notebook.

Connected

After connection, the device DTM appears.

If the connection is interrupted, e.g. due to a too large distance between device and adjustment tool, this is displayed on the adjustment tool. The message disappears when the connection is restored.

Change device code

Parameter adjustment of the device is only possible if the parameter protection is deactivated. When delivered, parameter protection is deactivated by default and can be activated at any time.

It is recommended to enter a personal 6-digit device code. To do this, go to menu " *Extended functions*", " *Access protection*", menu item " *Protection of the parameter adjustment*".

8.3 Parameter adjustment

Prerequisites

For parameter adjustment of the instrument via a Windows PC, the configuration software PACTware and a suitable instrument driver (DTM) according to FDT standard are required. The latest PACTware version as well as all available DTMs are compiled in a DTM Collection. The DTMs can also be integrated into other frame applications according to FDT standard.

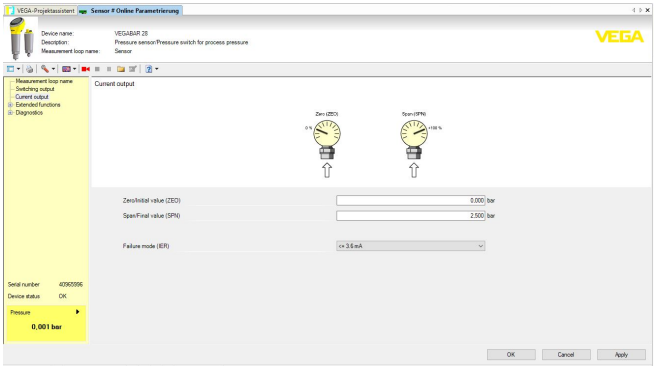

Fig. 26: Example of a DTM view - Adjustment current output

57086-EN-210301

9 Menu overview

9.1 VEGA Tools app and DTM (Bluetooth)

Start image (app)

Menu item	Device information	Actual measured values	Device status
Start image	Device name, software version, serial number	Pressure, output current, measuring cell temperature, electronics temperature, sensor TAG	OK, error indication

Main menu

Menu item	Parameter (code acc. to VDMA 24574-1)	Editing section	Basic setting
Measurement loop name	Measurement loop name	19 alphanumeric characters/ special characters	Sensor
Current output	Zero 4 mA (ZEO)	Measuring range begin … measuring range end	Measuring range begin
	Span 20 mA (SPN)		Measuring range end
	Reaction in case of fault (FER)	≤ 3.6 mA, ≥ 21 mA	≤ 3.6 mA
360° status display (free signalling)	Brightness (LED)	0 %, 10 %, 20 … 100 %	100 %
	Signalling	Acc. to NAMUR NE 107, free signalling	Switching output
	Fault	Red, yellow …, individual colour selection, no signalling	Yellow
	Flashing	Yes, no	No
	Operating states	Operating states 1, 2, 3, 4, 5	1
	Upper limit	Measuring range begin … measuring range end	
	Colour selection	Red, yellow …, individual colour selection, no signalling	Yellow
	Flashing	Yes, no	No

Extended functions

Menu item	Parameter (code acc. to VDMA 24574-1)	Editing section	Basic setting
Damping	Damping (DAM)	0 … 9.999 s	0 s
	Activate thermo-shock suppression	Yes, no	No
Offset correction	Offset correction (OFS)	Execute, automatic correction	0,000 bar
Adjustment with medium	Apply min. pressure on the sensor	Accept 4 mA (LRV)	-
	Apply max. pressure on the sensor	Accept 20 mA (URV)	

Menu item	Parameter (code acc. to VDMA 24574-1)	Editing section	Basic setting
Units	Pressure unit (UNI)	mbar, bar, Pa, kPa, MPa, psi, mmH2O, mmHg, inH2O, inHg	bar
	Temperature (TMP)	°C, °F	°C
Access protection	Bluetooth access code		Device-specific access code
	Protection of the parameterization		Deactivated
Reset	Reset		-

Diagnostics

Menu item	Parameter	Indication
Status	Device status, parameter change counter	Actual values
Peak value indicator	Process pressure, measuring cell temperature, electronics temperature	Acutal values, min. values, max. values
Measured values	Measured values, output, additional measured values	Actual values pressure, current output, electronics temperature, measuring cell temperature
Measured value memory (DTM)	Trend curve	Last values
Simulation	Pressure, current output	Simulated values
Sensor information		Device name, serial number, hardware version, software version, factory calibration date, Device Revision, measuring range begin, measuring range end
Sensor features (DTM)	Sensor characteristics	Features of the instrument version

10 Diagnostics and servicing

10.1 Maintenance

Maintenance

If the device is used properly, no special maintenance is required in normal operation.

Precaution measures against buildup

In some applications, product buildup on the diaphragm can influence the measuring result. Depending on the sensor and application, take precautions to ensure that heavy buildup, and especially a hardening thereof, is avoided.

Cleaning

The cleaning helps that the type label and markings on the instrument are visible.

Take note of the following:

- Use only cleaning agents which do not corrode the housings, type label and seals
- Use only cleaning methods corresponding to the housing protection rating

10.2 Rectify faults

Reaction when malfunction occurs

The operator of the system is responsible for taking suitable measures to rectify faults.

Causes of malfunction

The device offers maximum reliability. Nevertheless, faults can occur during operation. These may be caused by the following, e.g.:

- Sensor
- Process
- Voltage supply
- Signal processing

Fault rectification

The first measures are:

- Evaluation of fault messages
- Checking the output signal
- Treatment of measurement errors

A smartphone/tablet with the adjustment app or a PC/notebook with the software PACTware and the suitable DTM offer you further comprehensive diagnostic possibilities. In many cases, the causes can be determined in this way and the faults eliminated.

Reaction after fault rectification

Depending on the reason for the fault and the measures taken, the steps described in chapter "*Setup*" must be carried out again or must be checked for plausibility and completeness.

24 hour service hotline

Should these measures not be successful, please call in urgent cases the VEGA service hotline under the phone no. **+49 1805 858550**.

The hotline is also available outside normal working hours, seven days a week around the clock.

Since we offer this service worldwide, the support is provided in English. The service itself is free of charge, the only costs involved are the normal call charges.

10.3 Diagnosis, fault messages

4 … 20 mA signal

Connect a multimeter in the suitable measuring range according to the wiring plan. The following table describes possible errors in the current signal and helps to eliminate them:

Error	Cause	Rectification
4 … 20 mA signal not stable	Fluctuating measured value	Set damping
4 … 20 mA signal missing	Electrical connection faulty	Check connection, correct, if necessary
	Voltage supply missing	Check cables for breaks; repair if necessary
	Operating voltage too low, load resistance too high	Check, adapt if necessary
Current signal greater than 22 mA, less than 3.6 mA	Sensor electronics defective	Replace device or send in for repair depending on device version

LED illuminated ring

The LED illuminated ring on the device (see chapter " *Configuration*") indicates the status of the device. This enables simple on-site diagnosis without the need for tools.

Note:
The LED illuminated ring is not available for device versions with continuous stainless steel housing.

Colour [2]	Permanent light	Flashing
Green	voltage supply on, operation without failure	Message " *Maintenance required*" is displayed
Yellow	voltage supply on, operation without failure	-
Red	voltage supply on, operation with failure	Message acc. to to NE 107 " *Function check*", " *Out of specification*" or " *Simulation state*" is displayed

10.4 Status messages according to NE 107

The instrument features self-monitoring and diagnostics according to NE 107 and VDI/VDE 2650. In addition to the status messages in the following tables there are more detailed error messages available under the menu item " *Diagnostics*" via the respective adjustment module.

Status messages

The status messages are divided into the following categories:

- Failure
- Function check
- Out of specification
- Maintenance required

[2] Adjustable via VEGA Tools app or PACTware/DTM

and explained by pictographs:

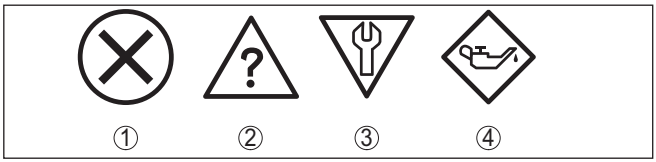

Fig. 27: Pictographs of the status messages

1 Failure - red
2 Out of specification - yellow
3 Function check - orange
4 Maintenance required - blue

Failure: Due to a malfunction in the instrument, a fault message is output.

This status message is always active. It cannot be deactivated by the user.

Function check: The instrument is being worked on, the measured value is temporarily invalid (for example during simulation).

This status message is inactive by default.

Out of specification: The measured value is unreliable because an instrument specification was exceeded (e.g. electronics temperature).

This status message is inactive by default.

Maintenance required: Due to external influences, the instrument function is limited. The measurement is affected, but the measured value is still valid. Plan in maintenance for the instrument because a failure is expected in the near future (e.g. due to buildup).

This status message is inactive by default.

Failure

Code Text message	Cause	Rectification
F013 no measured value available	Hardware error in the area of the measuring cell	Send instrument for repair
F017 Adjustment span too small	Adjustment not within specification	Change adjustment
F036 no operable sensor software	Failed or interrupted software update	Repeat software update
F080 General software error	General software error	Restart
F110 Switching points too close together	Selected switching points too close together	Increase the distance between the switching points
F111 Switching points interchanged	Switching point 1 is smaller than switching point 2	Select switching point 1 to greater than switching point 2

Code Text message	Cause	Rectification
F260 Error in the calibration	Checksum error in the calibration values	Send instrument for repair
F261 Error in the instrument settings	Checksum error in the configuration values	Carry out a reset

Function check

Code Text message	Cause	Rectification
C700 Simulation active	A simulation is active	Finish simulation Wait for the automatic end after 60 mins.

Out of specification

Code Text message	Cause	Rectification
S600 Impermissible electronics temperature	Temperature of the electronics in the non-specified range	Check ambient temperature Insulate electronics
S604 Switching output overloaded	Overload or short circuit at output 1 or 2	Electrical connection, check load resistance

Maintenance

Code Text message	Cause	Rectification
M504 Error at a device interface	Interference of the internal communication to Bluetooth	Restart Send instrument for repair
M510 No communication with the main controller	Fault in internal communication with the display	Restart Send instrument for repair

10.5 Software update

The device software is updated via Bluetooth.

The following components are required:

- Instrument
- Voltage supply
- PC/notebook with PACTware/DTM and Bluetooth USB adapter
- Current instrument software as file

You can find the current instrument software as well as detailed information on the procedure in the download area of our homepage.

Caution:
Instruments with approvals can be bound to certain software versions. Therefore make sure that the approval is still effective after a software update is carried out.

You can find detailed information in the download area on our homepage.

10.6 How to proceed if a repair is necessary

You can find an instrument return form as well as detailed information about the procedure in the download area of our homepage. By doing this you help us carry out the repair quickly and without having to call back for needed information.

In case of repair, proceed as follows:

- Print and fill out one form per instrument
- Clean the instrument and pack it damage-proof
- Attach the completed form and, if need be, also a safety data sheet outside on the packaging
- Ask the agency serving you to get the address for the return shipment. You can find the agency on our homepage.

11 Dismount

11.1 Dismounting steps



Warning:
Before dismounting, be aware of dangerous process conditions such as e.g. pressure in the vessel or pipeline, high temperatures, corrosive or toxic media etc.

Take note of chapters " *Mounting*" and " *Connecting to voltage supply*" and carry out the listed steps in reverse order.

11.2 Disposal

The device is made of recyclable materials. For this reason, it should be disposed of by a specialist recycling company. Observe the applicable national regulations.

12 Certificates and approvals

12.1 Radio licenses

Bluetooth
The Bluetooth radio module in the device has been tested and approved according to the current edition of the applicable country-specific norms or standards.

The confirmations as well as regulations for use can be found in the document " *Radio licenses*" supplied or on our homepage.

12.2 Approvals for Ex areas

Approved versions for use in hazardous areas are available or in preparation for the device series.

You can find the relevant documents on our homepage.

12.3 Approvals as overfill protection

Approved versions for use as part of an overfill protection system are available or in preparation for this device series.

The corresponding approvals can be found on our homepage.

12.4 Food and pharmaceutical certificates

Versions for use in the food and pharmaceutical industries are available or in preparation.

The corresponding certificates can be found on our homepage.

12.5 EU conformity

The device fulfils the legal requirements of the applicable EU directives. By affixing the CE marking, we confirm the conformity of the instrument with these directives.

The EU conformity declaration can be found on our homepage.

Due to the design of its process fittings, the device does not subject of EU pressure device directive if it is operated at process pressures ≤ 200 bar.

12.6 NAMUR recommendations

NAMUR is the automation technology user association in the process industry in Germany. The published NAMUR recommendations are accepted as the standard in field instrumentation.

The device fulfils the requirements of the following NAMUR recommendations:

- NE 21 – Electromagnetic compatibility of equipment
- NE 43 – Signal level for fault information from measuring transducers
- NE 53 – Compatibility of field devices and display/adjustment components
- NE 107 – Self-monitoring and diagnosis of field devices

For further information see www.namur.de.

12.7 Environment management system

Protection of the environment is one of our most important duties. That is why we have introduced an environment management system with the goal of continuously improving company environmental protection. The environment management system is certified according to DIN EN ISO 14001. Please help us fulfil this obligation by observing the environmental instructions in chapters " *Packaging, transport and storage*", " *Disposal*" of these operating instructions.

13 Supplement

13.1 Technical data

Note for approved instruments

The technical data in the respective safety instructions which are included in delivery are valid for approved instruments (e.g. with Ex approval). These data can differ from the data listed herein, for example regarding the process conditions or the voltage supply.

All approval documents can be downloaded from our homepage.

Materials and weights

Materials, wetted parts

Process fitting	316L, PVDF, Duplex steel (1.4462)
Diaphragm	Sapphire-ceramic® (> 99.9 % Al_2O_3 ceramic)
Measuring cell seal	FKM (VP2/A), EPDM (A+P 70.10-02), FFKM (Perlast G74S)
Seal for process fitting (in the scope of delivery)	
– Thread G½ (EN 837), thread G½ inside G¼ (ISO 228-1), thread G½ inside 11.4 mm (ISO 228-1), thread M20 x 1.5 (EN 837), thread G1½ (DIN 3852-A)	Klingersil C-4400
– Further thread versions	Depending on the configuration

Materials for applications in foodstuffs

Surface quality, hygienic fittings, typ.	
– Process fitting	R_a < 0.8 µm
– Ceramic diaphragm	R_a < 0.5 µm

Materials, non-wetted parts

Electronics housing	316L
M12 x 1 plug connector	
– Contact support/Housing cap	PBT/PC, 1.4404
– Contacts	CuZn, nickel layer and 0.8 µm gold-plated
Plug connector according to ISO 4400	
– Contact, housing plug	PBT/PC
– Housing connector plug	PA
– Lid screw	StSt
– Contact surface	German silver
– Plug seal	Silicone
Direct cable outlet	
– Cable enclosure	PBT/PC, 1.4404
– Cable	PUR
Weight	approx. 0.25 kg (0.55 lbs)

Torques

Max. torque for process fitting (examples)

- Clamp — 5/10 Nm (3.688/7.376 lbf ft)
- Thread G1 (DIN 3852-E) PEEK, G1½ (DIN 3852-A-B) PEEK — 10 Nm (7.376 lbf ft)
- Varivent — 20 Nm (14.75 lbf ft)
- Thread G½ (ISO 228-1), G¾ (DIN 3852-E), M30 x 1.5, Ingold, NPT connections — 30 Nm (22.13 lbf ft)
- SMS, collar socket DIN 11851, DIN 11864-1, Form A — 40 Nm (29.50 lbf ft)
- Thread G½ (EN 837), G½ (DIN 3852-A), G1 (ISO 228-1), G1½ (DIN 3852-A) — 50 Nm (36.88 lbf ft)
- Thread G1 with conus — 100 Nm (73.76 lbf ft)

Input variable

The specifications are only an overview and refer to the measuring cell. Limitations due to the material and version of the process fitting as well as the selected pressure type are possible. The specifications on the nameplate apply. [3)]

Nominal measuring ranges and overload capability in bar/kPa

Nominal range	Overload capacity, max. pressure	Overload capacity, min. pressure
Gauge pressure		
0 … +0.1 bar/0 … +10 kPa	+15 bar/+1500 kPa	-0.2 bar/-20 kPa
0 … +0.4 bar/0 … +40 kPa	+30 bar/+3000 kPa	-0.8 bar/-80 kPa
0 … +1 bar/0 … +100 kPa	+35 bar/+3500 kPa	-1 bar/-100 kPa
0 … +2.5 bar/0 … +250 kPa	+50 bar/+5000 kPa	-1 bar/-100 kPa
0 … +5 bar/0 … +500 kPa	+65 bar/+6500 kPa	-1 bar/-100 kPa
0 … +10 bar/0 … +1000 kPa	+90 bar/+9000 kPa	-1 bar/-100 kPa
0 … +25 bar/0 … +2500 kPa	+130 bar/+13000 kPa	-1 bar/-100 kPa
0 … +60 bar/0 … +6000 kPa	+200 bar/+20000 kPa	-1 bar/-100 kPa
-0.05 … +0.05 bar/-5 … +5 kPa	+15 bar/+1500 kPa	-0.2 bar/-20 kPa
-0.2 … +0.2 bar/-20 … +20 kPa	+20 bar/+2000 kPa	-0.4 bar/-40 kPa
-0.5 … +0.5 bar/-50 … +50 kPa	+35 bar/+3500 kPa	-1 bar/-100 kPa
-1 … 0 bar/-100 … 0 kPa	+35 bar/+3500 kPa	-1 bar/-100 kPa
-1 … +1.5 bar/-100 … +150 kPa	+40 bar/+4000 kPa	-1 bar/-100 kPa
Absolute pressure		
0 … 0,1 bar/0 … 10 kPa	15 bar/1500 kPa	0 bar abs.
0 … 1 bar/0 … 100 kPa	35 bar/3500 kPa	0 bar abs.
0 … 2.5 bar/0 … 250 kPa	50 bar/5000 kPa	0 bar abs.

[3)] Data on overload capability apply for reference temperature.

Nominal range	Overload capacity, max. pressure	Overload capacity, min. pressure
0 … +5 bar/0 … +500 kPa	65 bar/+6500 kPa	0 bar abs.
0 … 10 bar/0 … 1000 kPa	90 bar/9000 kPa	0 bar abs.
0 … 25 bar/0 … 2500 kPa	+130 bar/+13000 kPa	0 bar abs.
0 … 60 bar/0 … 6000 kPa	+200 bar/+20000 kPa	0 bar abs.

Nominal measuring ranges and overload capacity in psi

Nominal range	Overload capacity, max. pressure	Overload capacity, min. pressure
Gauge pressure		
0 … +1.5 psig	+225 psig	-3 psig
0 … +5 psig	+435 psig	-12 psig
0 … +15 psig	+525 psig	-14.51 psig
0 … +30 psig	+725 psig	-14.51 psig
0 … +75 psig	+950 psig	-14.51 psig
0 … +150 psig	+1300 psig	-14.51 psig
0 … +300 psig	+1900 psig	-14.51 psig
0 … +900 psig	+2900 psig	-14.51 psig
-0.7 … +0.7 psig	+225 psig	-3 psig
-3 … +3 psig	+290 psi	-6 psig
-7 … +7 psig	+525 psig	-14.51 psig
-14.5 … 0 psig	+525 psig	-14.51 psig
-14.5 … +20 psig	+580 psig	-14.51 psig
Absolute pressure		
0 … 15 psi	525 psi	0 psi
0 … 30 psi	600 psi	0 psi
0 … +75 psi	975 psi	0 psi
0 … 150 psi	1350 psi	0 psi
0 … 300 psi	1500 psi	0 psi
0 … 900 psi	+2900 psi	0 psi

Adjustment ranges

Specifications refer to the nominal measuring range, pressure values lower than -1 bar cannot be set

Zero/Span adjustment:

– Zero	-20 … +95 %
– Span	-120 … +120 %
Maximum permissible Turn Down	Unlimited (recommended 20 : 1)

Switch-on phase	
Start-up time with operating voltage U_B	≤ 2 s
Starting current for run-up time	≤ 3.6 mA

Output variable - two-wire 4 … 20 mA	
Output signal	4 … 20 mA - passive
Connection technology	Two-wire
Range of the output signal	3.8 … 20.5 mA
Signal resolution	5 µA
Fault signal, current output (adjustable)	≤ 3.6 mA, ≥ 21 mA, last measured value
Max. output current	21.5 mA
Load	See load resistance under Power supply
Transferred measured value	Pressure

Dynamic behaviour output

Dynamic characteristics - Current output

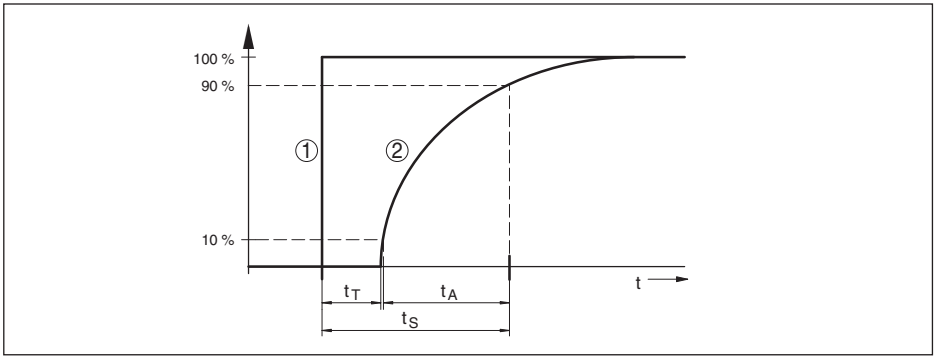

Fig. 28: Behaviour the current output in case of sudden change of the process variable. t_T: dead time; t_A: rise time; t_S: jump response time

1 Process variable
2 Output signal

Size	Time
Dead time	≤ 2 ms
Rise time (10 … 90 %)	≤ 4 ms
Step response time (ti: 0 s, 10 … 90 %)	≤ 6 ms

Damping (63 % of the input variable) 0 … 9 s, adjustable

Reference conditions and influencing variables (according to DIN EN 60770-1)

Reference conditions according to DIN EN 61298-1

- Temperature +15 … +25 °C (+59 … +77 °F)
- Relative humidity 45 … 75 %

57086-EN-210301

– Air pressure	860 … 1060 mbar/86 … 106 kPa (12.5 … 15.4 psig)
Determination of characteristics	Limit point adjustment according to IEC 61298-2
Characteristic curve	Linear
Reference installation position	upright, diaphragm points downward
Influence of the installation position	< 0.2 mbar/20 Pa (0.003 psig)

Deviation (according to IEC 60770)

Applies to the 4 … 20 mA current output and refers to the adjusted span. Turn down (TD) is the relation nominal measuring range/adjusted span.

Accuracy class	Non-linearity, hysteresis and repeatability with TD 1 : 1 up to 5 : 1	Non-linearity, hysteresis and repeatability with 5 : 1
0.3 %	< 0.3 %	< 0.06 % x TD

Influence of the medium or ambient temperature

Average temperature coefficient of the zero signal

– In the compensated temperature range [4]	< 0.15 %/10 K
– Outside the compensated temperature range typ.	0.3 %/10 K

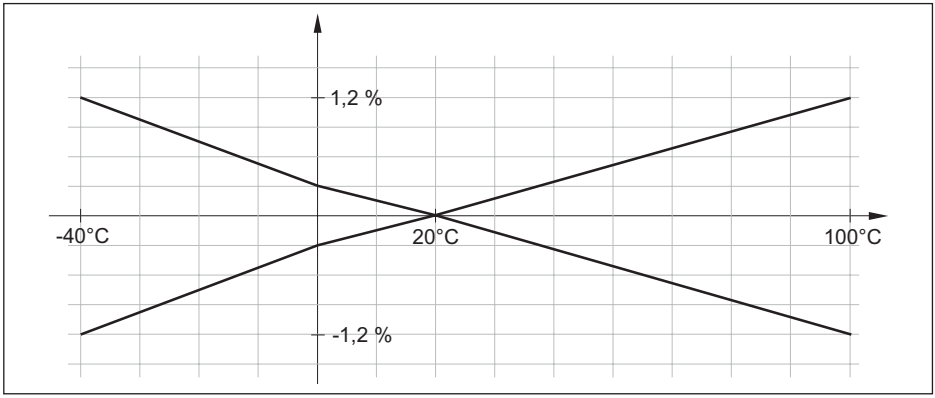

Fig. 29: Temperature error with TD 1 : 1

Long-term stability (according to DIN 16086)

Specifications refer to the set span. Turn down (TD) is the ratio: nominal measuring range/set span.

Time period	Long-term drift zero signal and output span
One year	< 0.1 % x TD
Two years	< 0.15 % x TD
Five years	< 0.2 % x TD
Ten years	< 0.4 % x TD

[4] 0 … +100 °C (+32 … +212 °F)

Ambient conditions	
Ambient temperature	-40 … +80 °C (-40 … +176 °F)
Storage and transport temperature	-40 … +80 °C (-40 … +176 °F)
Relative humidity	20 … 85 %

Mechanical environmental conditions	
Vibrations (oscillations)	Classe 4M8 acc. to IEC 60271-3-4 (5 g at 4 … 200 Hz)
Impacts (mechanical shock)	Class 6M4 acc. to IEC 60271-3-6 (50 g, 2.3 ms)
Impact resistance	
– Plug according to ISO 4400	IK07 acc. to IEC 62262
– M12 x 1 plug, direct cable outlet	IK05 acc. to IEC 62262

Process conditions

Process temperature

Measuring cell seal		Process temperature	Process temperature with process fitting PVDF
FKM	VP2/A	-20 … +130 °C (-4 … +266 °F)	-20 … +80 °C (-4 … +176 °F) [5]
EPDM	A+P 70.10-02	-40 … +130 °C (-40 … +266 °F)	
FFKM	Perlast G74S	-15 … +130 °C (+5 … +266 °F)	

Temperature derating

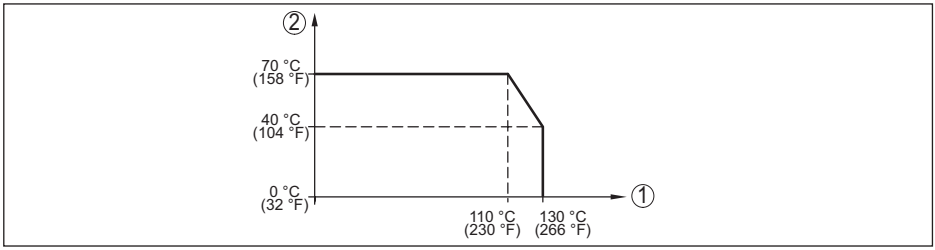

Fig. 30: Temperature derating VEGABAR 28

1 Process temperature
2 Ambient temperature

[5] Process pressures > 5 bar: 20 … +60 °C (-4 … +140 °F)

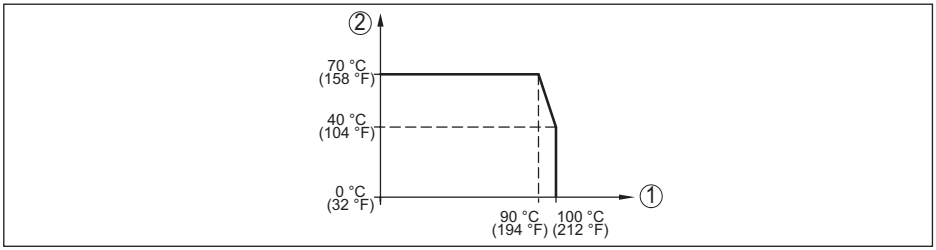

Fig. 31: Temperature derating VEGABAR 28, with activated Bluetooth communication

1 Process temperature
2 Ambient temperature

SIP process temperature[6)]

Device configuration suitable for vapour, i.e. measuring cell seal EPDM or FFKM (Perlast G74S), previous CIP cleaning up to max. +80 °C (+176 °F): [7)]

SIP process temperature with vapour stratification up to

– 15 minutes	+150 °C (+302 °F)
– 30 minutes	+140 °C (+284 °F)
– 1 hour	+135 °C (+275 °F)

Process pressure

Permissible process pressure	see specification " *MWP*" on the type label [8)]

Indication	
Status indication	LED illuminated ring (green-yellow-red)

Adjustment	
PC/Notebook	PACTware/DTM
Smartphone/Tablet	Adjustment app

Measuring cell temperature	
Range	-40 … +130 °C (-40 … +266 °F)
Resolution	< 0.2 K
Deviation	±3 K
Output of the temperature values via [9)]	Display and adjustment unit, Bluetooth, IO-Link

Bluetooth interface	
Bluetooth standard	Bluetooth 5.0 (downward compatible to Bluetooth 4.0 LE)
Frequency	2.402 … 2.480 GHz
Max. emitted power	+2.2 dBm
Max. number of participants	1

6) SIP = Sterilization in place
7) CIP = Cleaning in place
8) MWP: Maximum Working Pressure
9) Depending on the instrument version

Effective range typ. [10]	25 m (82 ft)

Electromechanical data

Angled plug connector	
– Version	4-pin according to ISO 4400
– Cable gland	M16 x 1.5 (for cable diameter 4.5 … 7 mm)
– Screw terminals for cable cross-section up to	1.5 mm^2 (AWG 15)
Angle plug connector with flap lid	
– Version	4-pin according to ISO 4400
– Cable gland	M16 x 1.5 (for cable diameter 4.5 … 11 mm)
– Screw terminals for cable cross-section	up to 1.5 mm^2 (AWG 15)
Angled plug connector with IDC method of termination	
– Version	4-pin according to ISO 4400
– Wire cross-section	0.5 … 1 mm^2 (AWG 20 … AWG 17)
– Strand diameter	> 0.1 mm
– Wire diameter	1.6 … 2 mm
– Outer cable diameter	5.5 … 8 mm
– Connection frequency (on the same cross-section)	10 x
Round plug connector	4-pole with M12 x 1 screw connection
Direct cable outlet	
– Length	5 m (16.4 ft), 10 m (32.81 ft), 25 m (82.02 ft)
– Wire cross-section	0.34 mm^2 (AWG 21)
– Diameter two-wire	approx. 6 mm
– Diameter three-wire	approx. 8 mm
– Min. bending radius (at 25 °C/77 °F)	25 mm

Voltage supply

Operating voltage U_B	12 … 35 V DC
Reverse voltage protection	Integrated
Permissible residual ripple	
– for U_N 12 V DC (12 V < U_B < 18 V)	≤ 0.7 V_{eff} (16 … 400 Hz)
– for U_N 24 V DC (18 V < U_B < 35 V)	≤ 1.0 V_{eff} (16 … 400 Hz)
Load resistor	
– Calculation	(U_B - U_{min})/0.022 A
– Example - for U_B= 24 V DC	(24 V - 12 V)/0.022 A = 545 Ω

Electrical protective measures

Potential separation	Electronics potential free up to 500 V AC

[10] Depending on the local conditions; with M12 x 1 plug stainless steel (closed full metal housing) effective range up to approx. 5 m (16.40 ft)

Protection rating

Connection technology	Protection according to EN 60529/IEC 529	Protection according to NEMA/ UL 50E
M12 x 1 plug	IP66/IP67/IP69	Type 6P
Plug according to ISO 4400	IP65	Type 4X
ISO 4400 plug with hinged cover		
Plug according to ISO 4400 with IDC method of termination		
Direct cable outlet	IP66/IP68 (0.5 bar)	Type 6P

Altitude above sea level	5000 m (16404 ft)
Protection class	III
Pollution degree	4

13.2 Dimensions

Connection technology

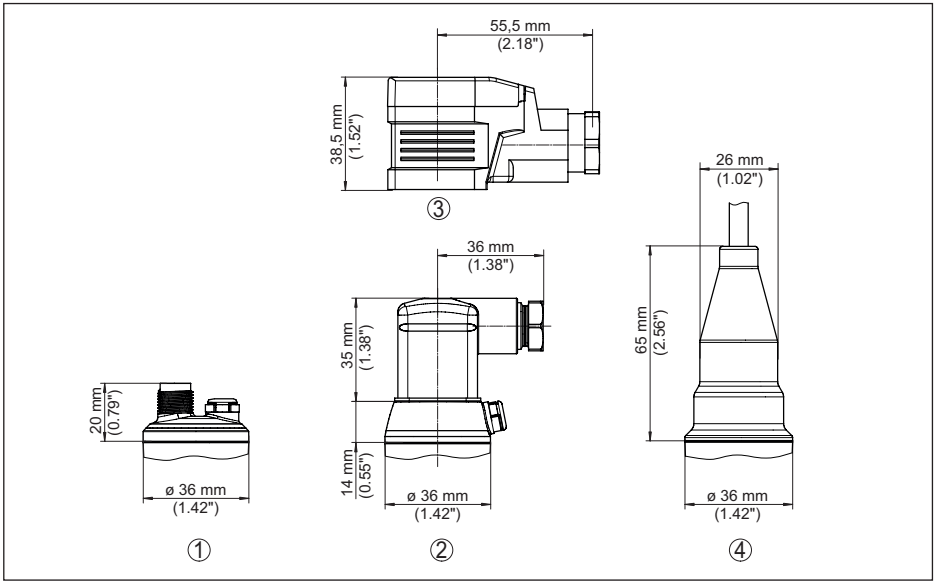

Fig. 32: Connection technology VEGABAR 28

1 M12 x 1 plug connector
2 Plug connector according to ISO 4400
3 Plug connector according to ISO 4400 with hinged cover
4 Direct cable outlet

VEGABAR 28, threaded fitting not front-flush

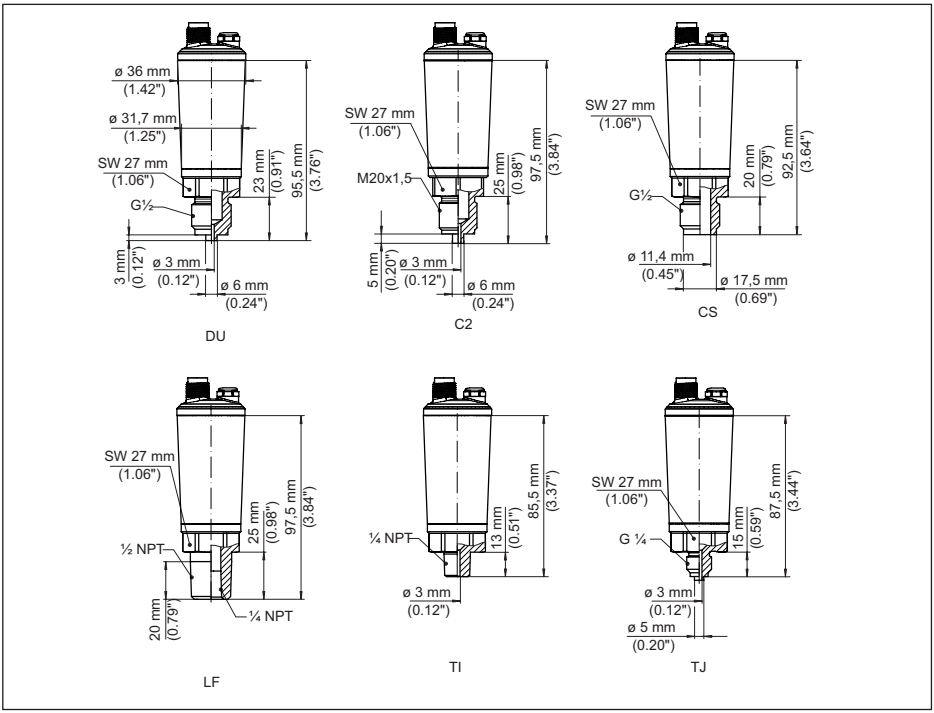

Fig. 33: VEGABAR 28, threaded fitting not front-flush

DU Thread G½ (EN 837), manometer connection
C2 Thread M20 x 1.5 (EN 837), manometer connection
CS Thread G½, inside G¼ A (ISO 228-1), Duplex (1.4462)
LF Thread ½ NPT, inside ¼ NPT (ASME B1.20.1)
TI Thread ¼ NPT (ASME B1.20.1)
TJ Thread G¼ (ISO 228-1)

VEGABAR 28, threaded fitting front-flush

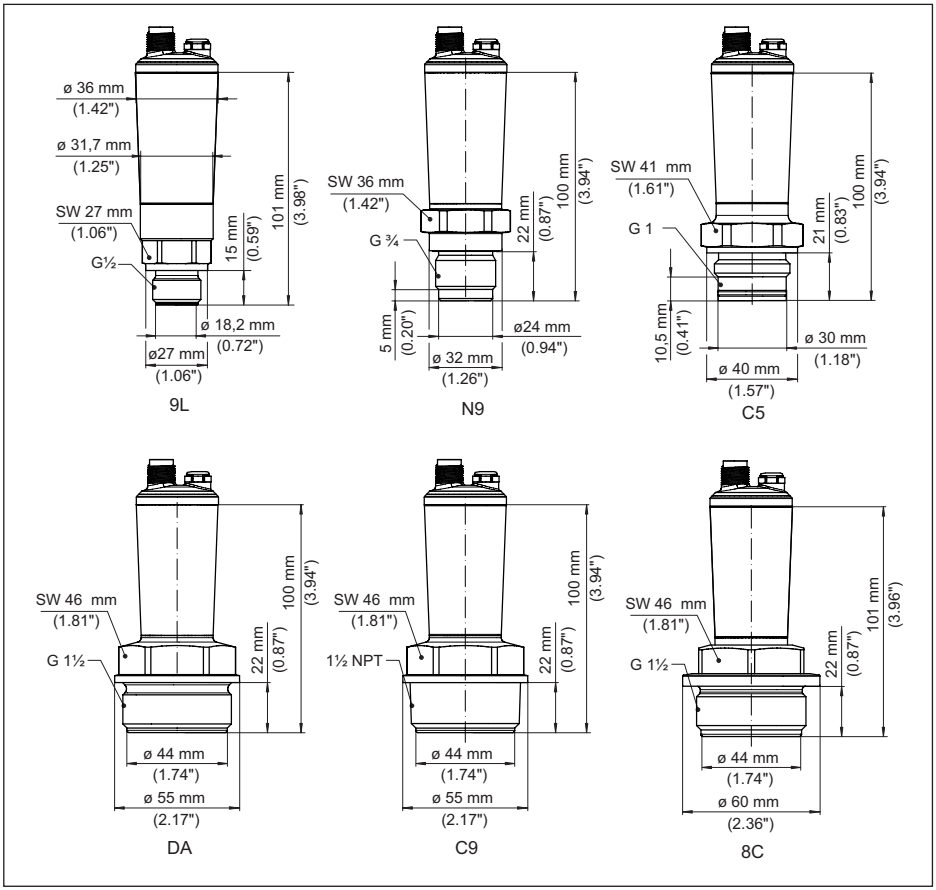

Fig. 34: VEGABAR 28, threaded fitting front-flush

9L Thread G½ (DIN 3852-A)
N9 Thread G¾ (DIN 3852-E)
C5 Thread G1 (ISO 228-1)
DA Thread G1½ (DIN 3852-A)
C9 Thread 1½ NPT (ASME B1.20.1)
8C Thread G1½ (DIN 3852-E), PEEK

VEGABAR 28, threaded fitting front-flush with cone/extension

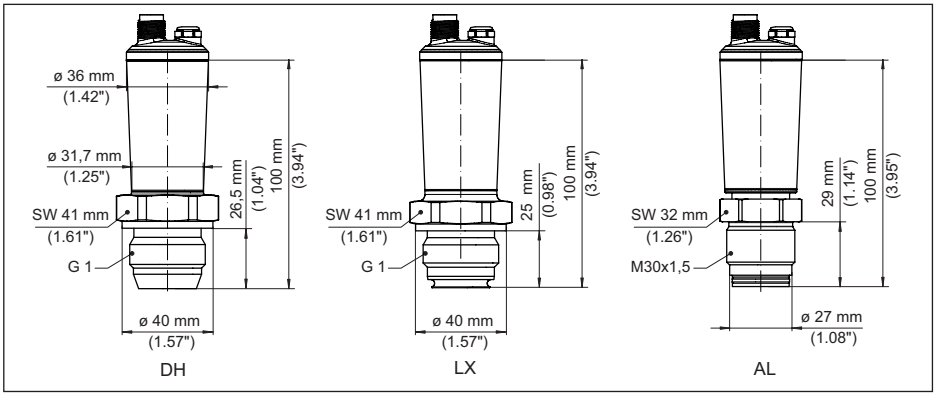

Fig. 35: VEGABAR 28, cone/extension fitting

DH Thread G1 (ISO 228-1), cone 40°
LX Thread G1 (ISO 228-1), hygienic design
AL Thread M30 x 1.5 (DIN 13)

VEGABAR 28, hygienic fitting

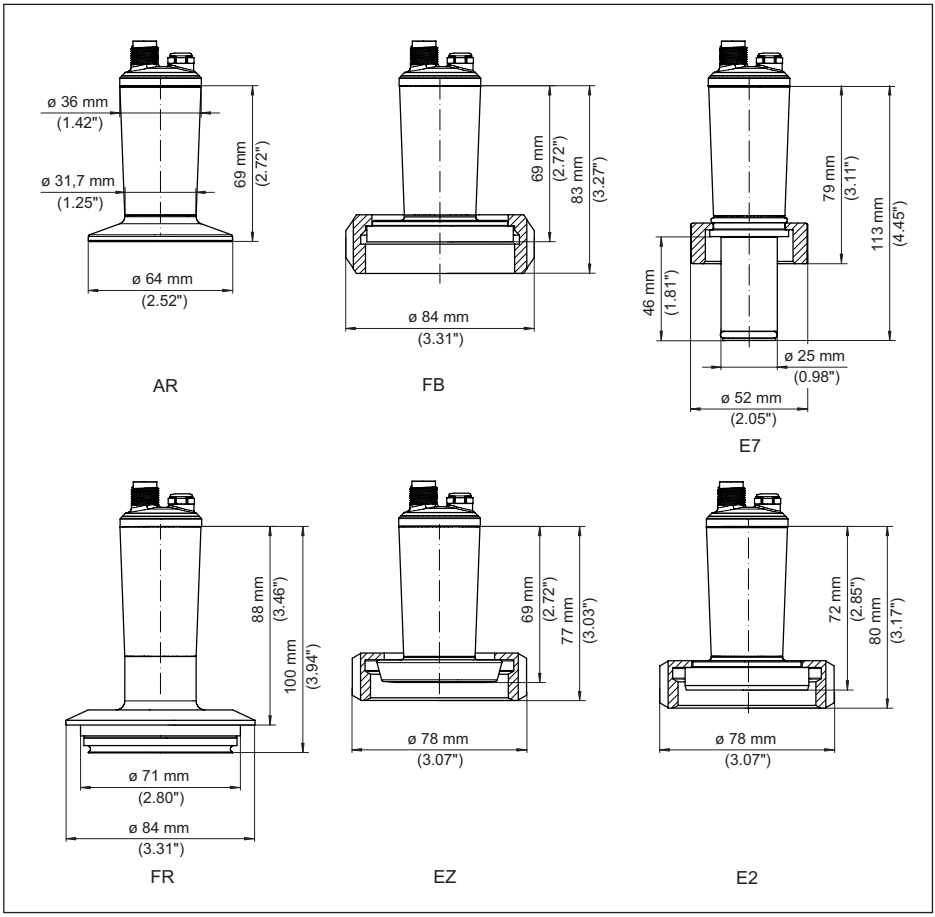

Fig. 36: VEGABAR 28, hygienic fitting

AR Clamp 2" PN 40, ø 64 mm (DIN 32676, ISO 2852)
FB SMS DN 51 PN 6
E7 Ingold connection PN 10
FR Varivent N50-40 PN 25, front-flush
EZ Collar socket DN 40 PN 40 (DIN 11851), front-flush
E2 Collar socket DN 40 PN 40 (DIN 11864-1, Form A)

13.3 Industrial property rights

VEGA product lines are global protected by industrial property rights. Further information see www.vega.com.

VEGA Produktfamilien sind weltweit geschützt durch gewerbliche Schutzrechte.

Nähere Informationen unter www.vega.com.

Les lignes de produits VEGA sont globalement protégées par des droits de propriété intellectuelle. Pour plus d'informations, on pourra se référer au site www.vega.com.

VEGA lineas de productos están protegidas por los derechos en el campo de la propiedad industrial. Para mayor información revise la pagina web www.vega.com.

Линии продукции фирмы ВЕГА защищаются по всему миру правами на интеллектуальную собственность. Дальнейшую информацию смотрите на сайте www.vega.com.

VEGA系列产品在全球享有知识产权保护。

进一步信息请参见网站< www.vega.com。

13.4 Licensing information for open source software

Open source software components are also used in this device. A documentation of these components with the respective license type, the associated license texts, copyright notes and disclaimers can be found on our homepage.

13.5 Trademark

All the brands as well as trade and company names used are property of their lawful proprietor/ originator.

Printing date:

All statements concerning scope of delivery, application, practical use and operating conditions of the sensors and processing systems correspond to the information available at the time of printing.
Subject to change without prior notice

© VEGA Grieshaber KG, Schiltach/Germany 2021

57086-EN-210301

VEGA Grieshaber KG
Am Hohenstein 113
77761 Schiltach
Germany

Phone +49 7836 50-0
E-mail: info.de@vega.com
www.vega.com