Main switch 4P, mounting, padlock

Part no. DMM-125/4/I5/P-G
Article no. 172853
Catalog No. DMM-125/4/I5/P-G

Delivery programme

Product range			Switch-disconnectors Dumeco
Basic function			Main switches Maintenance switches Manual override switches
Part group reference			DMM
Protection type			IP20
Emergency switching OFF/ emergency STOP			without emergency switching off/ emergency stop function in CI-K5 enclosure with grey knob
Design			main switch surface mounting
Locking facility			1 padlock, Ø 5 mm
Contacts			auxiliary contact fitted by user
Main circuits Poles [M]			4
Contact sequence			
Rated uninterrupted current	I_u	A	125

General

Standards			IEC/EN 60947, VDE 0660, IEC/EN 60204, CSA Switch-disconnector according to IEC/EN 60947-3
Certifications			CE, RoHs, KEMA, GOST-R, Lloyds
Ambient temperature		°C	
Operation	ϑ	°C	-25 - +55
Storage	ϑ	°C	-30 - +80
Overvoltage category/pollution degree			III/3
Rated impulse withstand voltage	U_{imp}	V AC	6000
Rated insulation voltage	U_i	V AC	1000
Mounting position			As required
Protection against direct contact when actuated from front (EN 50274)			Finger and back-of-hand proof

Contacts

Mechanical variables			
Main circuits Poles			4
Electrical characteristics			
Rated operational voltage	U_e	V AC	690
Rated uninterrupted current	I_u	A	125
Note on rated uninterrupted current I_u			Rated uninterrupted current Iu is specified for max. cross-section.
Short-circuit rating			
fuse			125
Rated conditional short-circuit current	Iq	kA	50
Breaking current		kA	14.5
max. let-through energy		kA^2s	140

Rated short-time withstand current (1 s current)	I_{cw}	A_{rms}	2500
Note on rated short-time withstand current Icw			Current for a time of 1 second

Switching capacity

Bemessungsausschaltvermögen cos φ nach IEC 60947-3		A	
400/415 V		A	480
500 V		A	520
690 V		A	352
Safe isolation to EN 61140			
Current heat loss per contact at I_e		W	4.5
Lifespan, mechanical	Operations		10000
AC			
AC-22A			
Bemessungsbetriebsstrom Lastschalter			
400 V 415 V	I_e	A	125
500 V	I_e	A	125
690 V	I_e	A	125
AC-23A			
Bemessungsbetriebsstrom Lastschalter			
400 V 415 V	I_e	A	60
500 V	I_e	A	65
690 V	I_e	A	44
Bemessungsbetriebsleistung AC-23A, 50 - 60 Hz	P	kW	
400 V 415 V	P	kW	30
500 V	P	kW	45
690 V	P	kW	40

Terminal capacities

Flexible with ferrules to DIN 46228	mm^2	
flexible	mm^2	6 - 70
Max. tightening torque	Nm	7

Dimensions

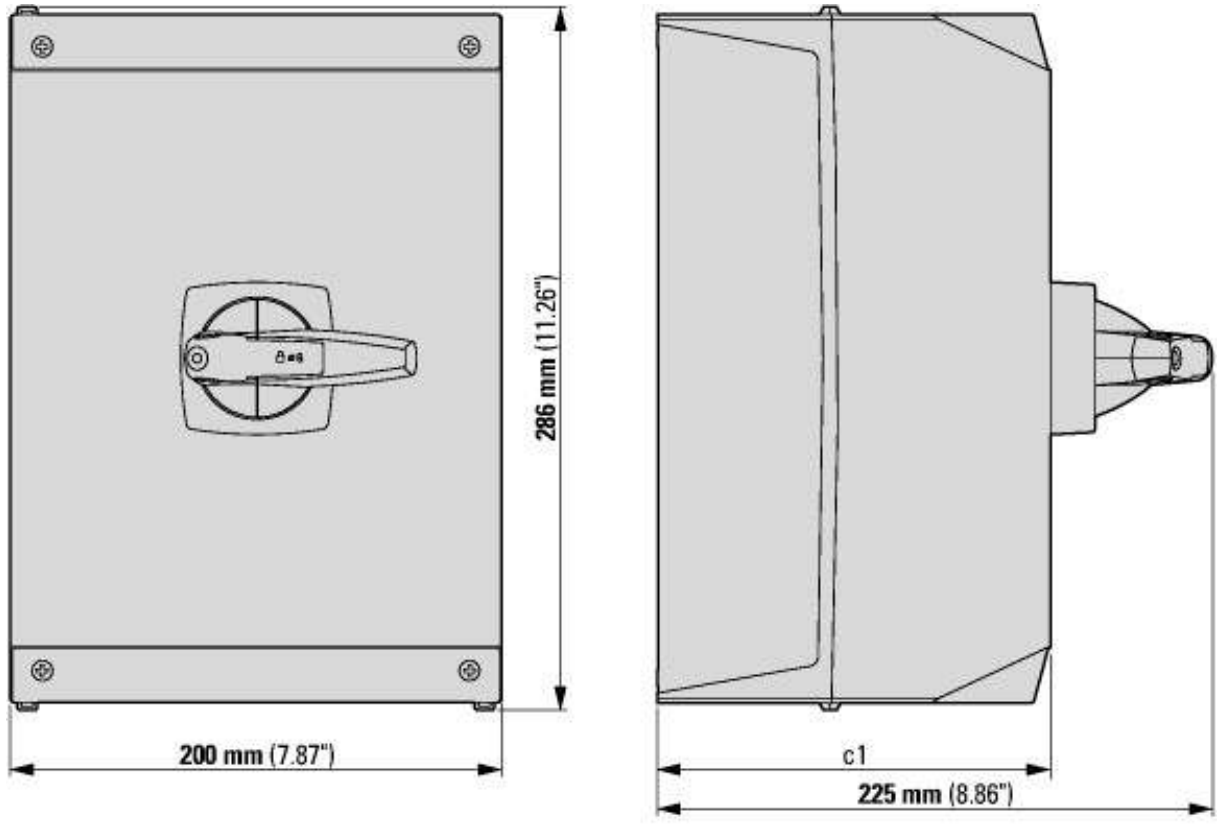

Additional product information (links)

http://de.ecat.moeller.net/flip-cat/?edition=HPLTEv1&startpage=4.2
http://de.ecat.moeller.net/flip-cat/?edition=HPLTEv1&startpage=4.4
http://de.ecat.moeller.net/flip-cat/?edition=HPLTEv1&startpage=4.6
http://de.ecat.moeller.net/flip-cat/?edition=HPLTEv1&startpage=4.8
http://de.ecat.moeller.net/flip-cat/?edition=HPLTEv1&startpage=4.8

© 12/2013 by Eaton Industries GmbH