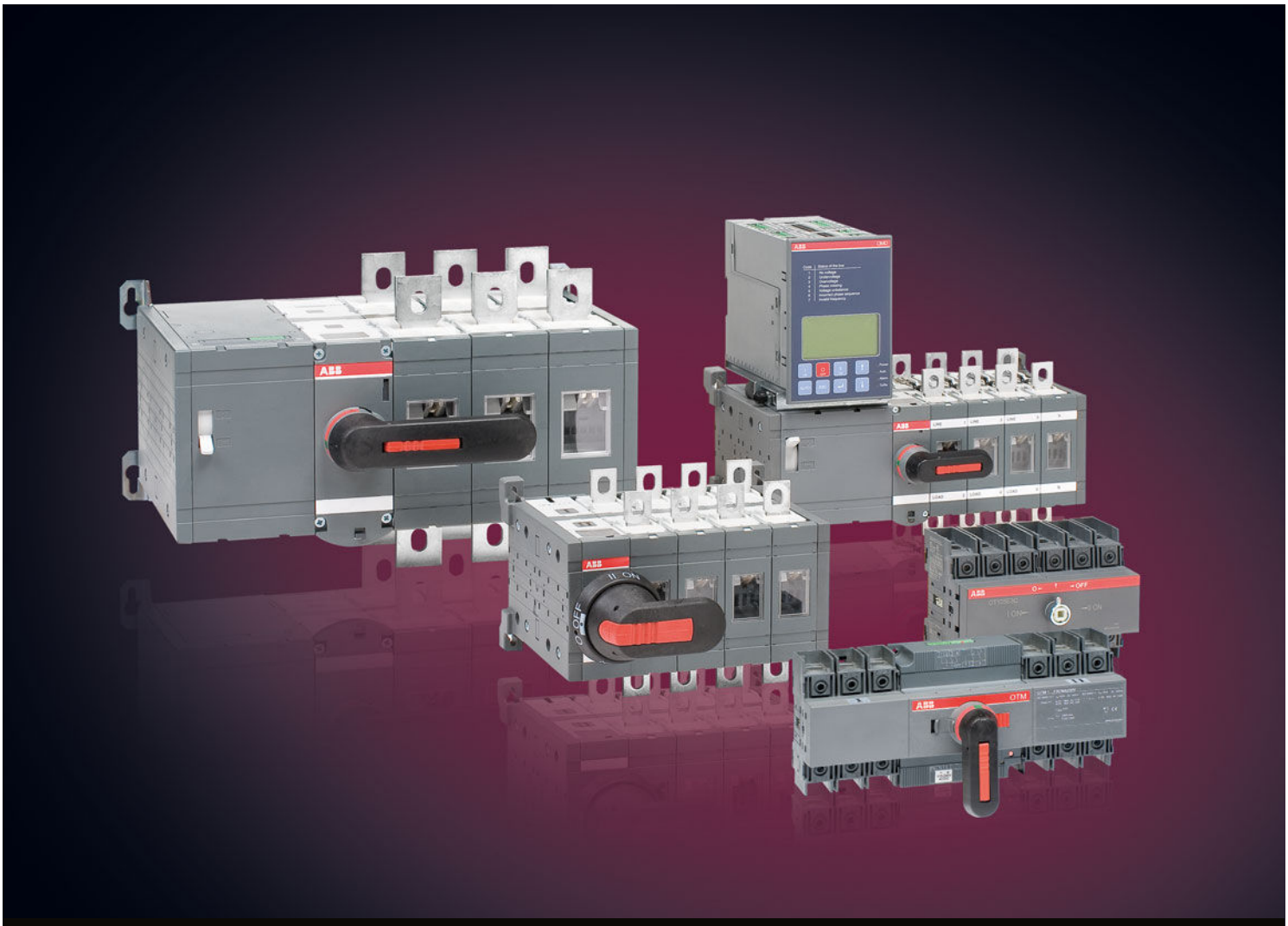

Breakers and Switches

Switches
Change-over and transfer switches

Power and productivity
for a better world™

Change-over and transfer switches 16...2500 A

Contents:

4 Product overview, features

8 Technical data
8 Manual, motorized and automatic transfer switches
14 Motor operators
16 Automatic transfer switches
19 UL/CSA manual change-over switches

20 Ordering information, IEC-types, open transition
20 Manual change-over switches
24 Manual change-over switches, fast transition
25 Motorized change-over switches
31 Automatic transfer switches

35 Ordering information, IEC-types, closed transition
35 Manual change-over switches

37 Ordering information, UL/CSA-types, open transition
37 UL/CSA manual change-over switches

38 Accessories overview

41 Ordering information, accessories
41 Handles
45 Extended shafts
47 Auxiliary contacts
48 Fourth poles
49 Terminal shrouds and phase separators
51 Connecting accessories
53 Conversion kits
55 Parallel connection kits and bridging bars
57 Automatic control units and dual power source

59 Dimension drawings

84 Contact functions

86 Index

Change-over and transfer switches 16...2500A

Manual operation








			OT16F			OT63F			OT100F			OT160E			OT160E_W			OT315E	
			OT25F			OT80F			OT125F			OT200E			OT200E_W			OT400E	
			OT40F									OT250E			OT250E_W				
I_{th} /A	**25**	**32**	**40**	**63**	**80**		**115**	**125**	**160**	**200**	**250**	**160**	**200**	**250**		**315**	**400**		
I_e /AC-22A, < 415V	16	25	40	63	80		100	125	160	200	250	160	200	250		315	400		
I_e /AC-23A, < 415V	16	20	23	45	75		80	90	160	200	250	160	200	250		315	400		
I_e /AC-21B, < 415V																			

Motor operation






						OTM40F_C			OTM160E_C			OTM160E_WC			OTM315E_C				
						OTM63F_C			OTM200E_C			OTM200E_WC			OTM400E_C				
						OTM80F_C			OTM250E_C			OTM250E_WC							
						OTM100F_C													
						OTM125F_C													
I_{th} /A				**40**	**63**	**80**	**115**	**125**	**160**	**200**	**250**	**160**	**200**	**250**		**315**	**400**		
I_e /AC-22A, < 415V				40	63	80	100	125	160	200	250	160	200	250		315	400		
I_e /AC-23A, < 415V				40	63	80	80	90	160	200	250	160	200	250		315	400		
I_e /AC-21B, < 415V																			

Automatic operation




									OTM160E_C_D						OTM160E_WC_D				
									OTM200E_C_D						OTM200E_WC_D				
									OTM250E_C_D						OTM250E_WC_D				
I_{th} /A									**160**	**200**	**250**				**160**	**200**	**250**		
I_e /AC-22A, < 415V									160	200	250				160	200	250		
I_e /AC-23A, < 415V									160	200	250				160	200	250		

Accessories

- Optional handles
- Terminal shrouds
- Extended shafts
- Connecting accessories
- Auxiliary contacts
- Locking accessories











OT630E	OT1000E	OT1600E	OT2000E
OT800E	OT1250E		OT2500E

630 800	**1000 1250**	**1600**	**2000 2500**
630 800	1000 1250	1600	
630 800	1000 1250	1250	
			2000 2500









OTM630E_C	OTM1000E_C	OTM1600E_C	OTM2000E_C
OTM800E_C	OTM1250E_C		OTM2500E_C

630 800	**1000 1250**	**1600**	**2000 2500**
630 800	1000 1250	1600	
630 800	1000 1250	1600	
			2000 2500









OTM315E_C_D	OTM630E_C_D	OTM1000E_C_D	OTM1600E_C_D
OTM400E_C_D	OTM800E_C_D	OTM1250E_C_D	

315 400	**630 800**	**1000 1250**	**1600**
315 400	630 800	1000 1250	1600
315 400	630 800	1000 1250	1250

Growing importance of a secure power supply



High performance level

In change-over applications where the loaded switch may need to be operated remotely, adequate durability has been ensured by testing against the IEC 60947-6-1 standard in the specification of endurance requirements.

Utilization categories:

– AC-31 for non-inductive or slightly inductive load
– AC-33 for motor loads or mixed loads including motors

- ABB change-over switches are rated according to IEC 60947-6-1 standard

Easy installation for local or remote control

ABB change-over switches are very easy to install: the manually operated switch is operated via a handle fixed directly on the switch or on the panel door. The 16 to 125 Ampere sizes can be snapped on to a DIN rail and the front fits in the 45 mm consumer unit cut-out.

The motorized change-over switches have snap-on control wire connections. Auxiliary contacts can be snapped on to the sides of the switches and the power terminals can be connected in parallel with bridging bars.

The automatic transfer switches feature the automatic control unit, which can be adjusted according to the mounting depth of the panel. The voltage sensing kit is installed at the factory thus reducing the expensive and time consuming installation work.

- Quick and easy installation
  – savings in time and expenses

As industrial processes and IT applications diversify, a secure power supply is increasingly important to cut production and maintenance costs. In emergency situations, the system logic of power distribution can become complex with mechanical devices looking after making, breaking, conducting and isolating power. Loads need to be transferred from one supply to another — this will be the case when energy use is restricted or when the supply source is overloaded.

Safe and reliable

ABB automatic transfer switches ensure service continuity with a number of built-in, integrated safety features. The change-over mechanism, for example, offers three stable positions which ensure isolation of the two asynchronous power supplies. This eliminates any risk of short-circuit between them, even in the presence of transient voltages. The automatic transfer switches are equipped with a handle for manual operation in case of emergency.

- Inbuilt safety

Compact design

The design of ABB change-over switches is advanced and compact, allowing installation in confined spaces at considerable savings. Compact double layer construction.

- Minimizing the need for space

Technical data
Manual change-over switches
OT16...125_C_

Manual change-over switches

Data according to IEC 60947-3		Switch size	
Rated insulation voltage and rated operational voltage AC20/DC20		Pollution degree 3	V
Dielectric strength		50 Hz 1min.	kV
Rated impulse withstand voltage			kV
Rated thermal current and rated operational current AC20/DC20	/ ambient 40°C	In open air	A
	/ ambient 40°C	In enclosure	A
	/ ambient 60°C	In enclosure	A
..with minimum conductor cross section		Cu	mm^2
Rated operational current, AC-21A		up to 500 V	A
		690 V	A
Rated operational current, AC-22A		up to 500 V	A
		690 V	A
Rated operational current, AC-23A		up to 415 V	A
		440 V	A
		500 V	A
		690 V	A
Rated operational current / poles in series, DC-21A		up to 48 V[1]	A
		110 V	A
		220 V	A
		440 V	A
		500 V	A
Rated operational current / poles in series, DC-22A		up to 48 V[1]	A
		110 V	A
		220 V	A
		440 V	A
Rated operational current / poles in series, DC-23A		up to 48 V[1]	A
		110 V	A
		220 V	A
		440 V	A
Rated operational power, AC-23A[2]		230 V	kW
The kW-ratings are accurate for 3-phase 1500		400 V	kW
R.P.M. standard asychronous motors		415 V	kW
		500 V	kW
		690 V	kW
Rated breaking capacity in		up to 415 V	A
category AC-23		500 V	A
		690 V	A
Rated conditional short-circuit current I_p (r.m.s.) and	I_p (r.m.s.) 50 kA, 415 V	$\hat{i}_c$ (peak)	kA
corresponding max. allowed cut-off current $\hat{i}_c$ (peak)	Max. OFA_ fuse size	gG/aM	A/A
value. The cut-off current $\hat{i}_c$ refers to values listed by	I_p (r.m.s.) 100 kA, 500 V	$\hat{i}_c$ (peak)	kA
fuse manufacturers (single phase test acc. to IEC60269).	Max. OFA_ fuse size	gG/aM	A
Rated short-time withstand current	I_{cw} (r.m.s.)	690 V 1s	kA
Rated short-time making capacity[3]	I_{cm} (peak)	690 V	kA
Power loss / pole	With rated current		W
Mechanical endurance	Number of oper. cycles[4]		Cycles
Mechanical endurance / switch	Number of operations		Oper.
Cable size	Cu-wire size suitable for		mm^2
	terminal clamps		AWG
Terminal tightening torque	Counter torque required		Nm
Operating torque	Typical for 3-pole switches		Nm
Weight without accessories	3-pole switch		kg
	4-pole switch		kg
Data according to UL508 (Listed)			
Current			A
Horsepower, 3-phase		200 V	HP
		208 V	HP
		240 V	HP
		480 V	HP
		600 V	HP

[1] Below 48 V, two poles in parallel up to OT80 are recommended particularly in polluted atmosphere
[2] These values are given for guidance and may vary acc. to the motor manufacturer
[3] Short circuit duration >50ms, without fuse protection
[4] Operating cycle: O - I - O - II - O

OT16_	OT25_	OT40_	OT63_	OT80_	OT100_	OT125_
750	750	750	750	750	750	750
6	6	6	6	6	6	6
8	8	8	8	8	8	8
25	32	40	63	80	115	125
25	32	40	63	80	115	125
20	25	32	50	63	80	100
4	6	10	16	25	35	50
16	25	40	63	80	100	125
16	25	40	63	80	100	125
16	25	40	63	80	100	125
16	25	40	63	80	100	125
16	20	23	45	75	80	90
16	20	23	45	65	65	78
16	20	23	45	58	60	70
10	11	12	20	20	40	50
16/1	25/1	32/1	63/1	80/1	100/1	125/1
16/2	25/2	32/2	63/2	80/2	100/2	125/2
16/3	25/3	32/3	63/4	63/4	100/4	100/4
16/4	16/4	16/4	16/4	16/4		
16/4	16/4	16/4	16/4	16/4		
16/1	25/1	32/1	63/1	80/1	100/1	125/1
16/2	25/2	32/2	63/2	80/2	100/2	125/2
16/3	25/3	32/4	45/4	45/4	63/4	80/4
10/4	10/4	10/4	10/4	10/4		
16/1	25/1	32/1	63/1	80/1	100/1	125/1
16/2	25/2	32/2	63/2	80/2	100/2	125/2
16/4	25/4	32/4	45/4	45/4	63/4	63/4
10/4	10/4	10/4	10/4	10/4		
3	4	5,5	11	22	22	22
7.5	9	11	22	37	37	45
7.5	9	11	22	37	37	45
7.5	9	11	22	37	37	45
7.5	9	11	15	18.5	37	45
128	160	184	360	640	640	720
128	160	184	360	464	480	560
80	88	96	160	160	320	400
6.5	6.5	6.5	13	13	16.5	16.5
40/32	40/32	40/32	100/80	100/80	125/125	125/125
			17	17		
			100/80	100/80		
0.5	0.5	0.5	1	1.5	2.5	2.5
0.7	0.7	0.7	1.4	2.1	3.6	3.6
0.3	0.6	1.6	2.8	4.5	4.0	6.3
10 000	10 000	10 000	10 000	10 000	10 000	10 000
20 000	20 000	20 000	20 000	20 000	20 000	20 000
0.75-10	0.75-10	0.75-10	1.5-35	1.5-35	10-70	10-70
18-8	18-8	18-8	14-4	14-4	8-00	8-00
0.8	0.8	0.8	2	2	6	6
1	1	1	1.2	1.2	2	2
0.25	0.25	0.25	0.64	0.64	0.90	0.90
0.31	0.31	0.31	0.70	0.70	1.18	1.18

16	25	40	60	80		
3	7.5	10	15	20		
3	7.5	10	15	20		
5	7.5	10	15	20		
10	15	20	30	40		
10	20	25	30	40		

Technical data
Motorized change-over switches
OTM40...125_C_

Motorized change-over switches

Data according to IEC 60947-3		Switch size	
Rated insulation voltage and rated operational voltage AC20/DC20		Pollution degree 3	V
Dielectric strength		50 Hz 1min.	kV
Rated impulse withstand voltage			kV
Rated thermal current and rated operational current AC20/DC20	/ ambient 40°C	In open air	A
	/ ambient 40°C	In enclosure	A
	/ ambient 60°C	In enclosure	A
..with minimum conductor cross section		Cu	mm^2
Rated operational current, AC-21A		up to 500 V	A
		690 V	A
Rated operational current, AC-22A		up to 500 V	A
		690 V	A
Rated operational current, AC-23A		up to 415 V	A
		500 V	A
		690 V	A
Rated operational current / poles in series, DC-21A		up to 48 V	A
		110 V	A
		220 V	A
Rated operational current / poles in series, DC-22A		up to 48 V	A
		110 V	A
		220 V	A
Rated operational current / poles in series, DC-23A		up to 48 V	A
		110 V	A
		220 V	A
Rated operational power, AC-23A[1]		230 V	kW
The kW-ratings are accurate for 3-phase 1500		400 V	kW
R.P.M. standard asychronous motors		415 V	kW
		500 V	kW
		690 V	kW
Rated breaking capacity in		up to 415 V	A
category AC-23		500 V	A
		690 V	A
Rated conditional short-circuit current I_p (r.m.s.) and corresponding max. allowed cut-off current $\hat{i}_c$ (peak) value. The cut-off current $\hat{i}_c$ refers to values listed by fuse manufacturers (single phase test acc. to IEC60269).	I_p (r.m.s.) 50 kA, 415 V	$\hat{i}_c$ (peak)	kA
	Max. OFA_ fuse size	gG/aM	A/A
	I_p (r.m.s.) 18 kA, 690 V	$\hat{i}_c$ (peak)	kA
	Max. OFA_ fuse size	gG	A
	I_p (r.m.s.) 50 kA, 690 V	$\hat{i}_c$ (peak)	kA
	Max. OFA_ fuse size	gG/aM	A/A
Rated short-time withstand current	I_{cw} (r.m.s.)	690 V 1s	kA
Rated short-time making capacity[2]	I_{cm} (peak)	690 V	kA
Power loss / pole	With rated current		W
Mechanical endurance	Number of oper. cycles[3]		Cycles
Mechanical endurance / switch	Number of operations		Oper.
Cable size	Cu-wire size suitable		mm^2
	for terminal clamps		AWG
Terminal tightening torque	Counter torque required		Nm
Operating torque	Typical for 3-pole switches		Nm
Weight without accessories	3-pole switch		kg
	4-pole switch		kg

Data according to IEC 60947-6-1			
Class of equipment			
Rated short-time withstand current	I_{cw} (r.m.s.)	690 V 0.1s	kA
Conditional short-circuit current	I_{cc} (r.m.s.)	415 V	kA
Corresponding fuse rating	gG/aM fuse	415 V	A
Rated operational current, AC-31B		up to 415 V	A
Rated operational current, AC-32B		up to 415 V	A
Rated operational current, AC-33B		up to 415 V	A

[1] These values are given for guidance and may vary acc. to the motor manufacturer
[2] Short circuit duration > 50ms, without fuse protection
[3] Operating cycle: O - I - O - II - O

OTM40_	OTM63_	OTM80_	OTM100_	OTM125_
800	800	800	800	800
6	6	6	6	6
8	8	8	8	8
40	63	80	115	125
40	63	80	115	125
32	50	63	80	100
10	16	25	35	50
40	63	80	100	125
40	63	80	100	125
40	63	80	100	125
40	63	80	100	125
40	63	80	80	90
40	60	60	60	70
40	40	40	40	50
40/1	63/1	80/1	100/1	125/1
40/2	63/2	80/2	100/2	125/2
40/4	63/4	80/4	100/4	100/4
40/1	63/1	80/1	100/1	125/1
40/2	63/2	80/2	100/2	125/2
40/4	63/4	80/4	80/4	80/4
40/1	63/1	80/1	100/1	125/1
40/2	63/2	80/2	100/2	125/2
40/4	63/4	63/4	63/4	63/4
7.5	15	22	22	22
18.5	30	37	37	45
18.5	30	37	37	45
22	37	37	37	45
37	37	37	37	45
320	504	640	640	720
320	480	480	480	560
320	320	320	320	400
16.5	16.5	16.5	16.5	16.5
125/125	125/125	125/125	125/125	125/125
11	11	11	11	11
125	125	125	125	125
10	10	10	10	10
63/63	63/63	63/63	63/63	63/63
2.5	2.5	2.5	2.5	2.5
3.6	3.6	3.6	3.6	3.6
1.6	2.8	3.5	4.0	6.3
10 000	10 000	10 000	10 000	10 000
20 000	20 000	20 000	20 000	20 000
2.5-25/2x2.5-16	10-70	10-70	10-70	10-70
14-4/2x14-6	8-00	8-00	8-00	8-00
6	6	6	6	6
5	5	5	5	5
1.37	1.37	1.37	1.37	1.37
1.60	1.60	1.60	1.60	1.60

PC	PC	PC	PC	PC
5	5	5	5	
50	50	50	50	50
125	125	125	125	125
40	63	80	100	125
40	63	80	100	125
40	63	80	80	80

Technical data
Manual, motorized and automatic transfer switches OT/OTM160...2500_C_

Manual / motorized change-over switches and automatic transfer switches

Data according to IEC 60947-3		Switch size		OT_160_	OT_200_
Rated insulation voltage and rated operational voltage AC20/DC20[1]		Pollution degree 3[2]	V	1000	1000
Dielectric strength		50 Hz 1min.	kV	10	10
Rated impulse withstand voltage[3]			kV	12	12
Rated thermal current and rated operational current AC20/DC20	/ ambient 40°C	In open air	A	160	200
	/ ambient 40°C	In enclosure	A	160	200
..with minimum conductor cross section		Cu	mm^2	70	95
Rated operational current, AC-21A		up to 500 V	A	160	200
		690 V	A	160	200
Rated operational current, AC-22A		up to 500 V	A	160	200
		690 V	A	160	200
Rated operational current, AC-23A		up to 415 V	A	160	200
		440 V	A	160	200
		500 V	A	160	200
		690 V	A	160	200
Rated operational current / poles in series, DC-21A...23A		≤ 110 V	A	160/2	200/2
		220 V	A	160/2	200/2
		440 V	A	160/3	200/3
		660 V	A	160/4	200/4
Rated operational power, AC-23A[5]		230 V	kW	45	60
The kW-ratings are accurate for 3-phase 1500		400 V	kW	90	110
R.P.M. standard asychronous motors		415 V	kW	90	110
		500 V	kW	110	132
		690 V	kW	160	200
Rated breaking capacity in category AC-23		up to 415 V	A	1 280	1 600
		500 V	A	1 280	1 600
		690 V	A	1 280	1 600
Rated conditional short-circuit current I_p (r.m.s.) and cut-off current $\hat{i}_c$ (peak) value. The cut-off current $\hat{i}_c$ refers to values listed by fuse manufacturers (single phase test acc. to IEC60269).	I_p (r.m.s.) 80 kA, 415 V	$\hat{i}_c$ (peak)	kA	40.5	40.5
	Max. OFA_ fuse size	gG/aM	A/A	355/315	355/315
	I_p (r.m.s.) 100 kA, 500 V	$\hat{i}_c$ (peak)	kA	40.5	40.5
	Max. OFA_ fuse size	gG/aM	A	315/315	315/315
	I_p (r.m.s.) 80 kA, 690 V	$\hat{i}_c$ (peak)	kA	40.5	40.5
	Max. OFA_ fuse size	gG/aM	A	355/315	355/315
Rated short-time withstand current	I_{cw} (r.m.s.)	690 V 0.15s	kA	15	15
		690 V 0.25s	kA	15	15
		690 V 1s	kA	8	8
Rated short-time making capacity[6]	I_{cm} (peak)[7]	690 V	kA	30	30
Power loss / pole	With rated current		W	2.4	4
Mechanical endurance	Number of oper. cycles[8]		Cycles	8 000	8 000
Mechanical endurance / switch	Number of operations		Oper.	16 000	16 000
Terminal bolt size	Metric thread diameter x length		mm	M8x25	M8x25
Terminal tightening torque	Counter torque required		Nm	15-22	15-22
Operating torque	Typical for 3-pole switches		Nm	7	7
Weight without accessories	Manual change-over switches	3-pole switch	kg	2.5	2.5
		4-pole switch	kg	3.2	3.2
	Motorized and automatic transfer switches	3-pole switch	kg	5.7	5.7
		4-pole switch	kg	6.4	6.4
Data according to IEC 60947-6-1					
Class of equipment				PC	PC
Rated short-time withstand current	I_{cw} (r.m.s.)	690 V 0.1s	kA	15	15
Rated operational current, AC-31B		up to 415 V	A	160	200
Rated operational current, AC-33B		up to 415 V	A	160	200

[1] Automatic transfer switches: operational voltage = max. 415 V AC for OTM_C2D_, OTM_C3D_ and OTM_C8D_
[2] Automatic transfer switches: pollution degree 2 for OTM_C2D_, OTM_C3D_ and OTM_C8D_
[3] Automatic transfer switches: U_{imp} = 6 kV for OTM_C2D_, OTM_C3D_ and OTM_C8D_
[4] Utilization category B
[5] These values are given for guidance and may vary acc. to the motor manufacturer
[6] Short circuit duration > 50ms, without fuse protection
[7] Max. distance from switch frame to nearest busbar / cable support 150 mm
[8] Operating cycle: O - I - O - II - O
[9] Category AC-21B, up to 415V
[10] For manual change-over switches
[11] For motorized and automatic transfer switches

OT_250_	OT_315_	OT_400_	OT_630_	OT_800_	OT_1000_	OT_1250_	OT_1600_	OT_2000_	OT_2500_
1000	1000	1000	1000	1000	1 000	1 000	1 000	1 000	1 000
10	10	10	10	10	10	10	10	10	10
12	12	12	12	12	12	12	12	12	12
250	315	400	630	800	1 000	1 250	1 600	2000	2500
250	315	400	630	800					
120	185	240	2x185	2x240	2x300	2x400	2x500	3x500	4x500
250	315	400	630	800	1 000	1 250	1 600	2000[9)]	2500[9)]
250	315	400	630	800	1 000	1 250	1 600		
250	315	400	630	800	1 000	1 250	1 600		
250	315	400	630	800	1 000	1 250	1 600		
250	315	400	630	800	1 000	1 250	1 250		
250	315	400	630	800	1 000	1 250	1 250		
250	315	400	630	800	1 000	1 250	1 250		
250	315	400	630	800	1 000	1 250	1 250		
250/2	315/1[4)]	400/1[4)]	630/1	800/1					
250/2	315/2[4)]	400/2[4)]	630/1	800/1					
230/3	315/3	360/3	630/2	720/2					
200/4	315/4	315/4	630/4[4)]	630/4[4)]					
75	100	132	200	250	315	400	400		
140	160	220	355	450	560	710	710		
145	180	230	355	450	560	710	710		
170	220	280	400	560	710	900	900		
250	315	400	630	800	1 000	1 200	1 200		
2 000	2 520	3 200	5 040	6 400	10 000	10 000	10 000		
2 000	2 520	3 200	5 040	6 400	10 000	10 000	10 000		
2 000	2 520	3 200	5 040	6 400	10 000	10 000	10 000		
40.5	59	59	83.5	83.5	100	100	100		
355/315	500/500	500/500	800/1 000	800/1 000	1 250/1 250	1 250/1 250	1 250/1 250		
40.5	61.5	61.5	90	90	106	106	106		
315/315	500/450	500/450	800/800	800/800	1 250/1 250	1 250/1 250	1 250/1 250		
40.5	59	59	83.5	83.5					
355/315	500/500	500/500	800/1 000	800/1 000					
15	31	31	38	38	50	50	50	50	50
15	24	24	36	36	50	50	50	50	50
8	15	15	20	20	50	50	50	55	55
30	65	65	80	80	92	92	92	110	110
6.5	6.5	10	25	40	19	29	48	55	85
8 000	8 000	8 000	5 000	5 000	3 000	3 000	3 000	2000	2000
16 000	16 000	16 000	10 000	10 000	6 000	6 000	6 000	4000	4000
M8x25	M10x30	M10x30	M12x40	M12x40	M12x60	M12x60	M12x60	M12x60	M12x60
15-22	30-44	30-44	50-75	50-75	50-75	50-75	50-75	50-75	50-75
7	16	16	27	27	78	78	78	78	78
2.5	4.7	4.7	12.8	12.8	32.3	32.3	34.8	48	48
3.2	5.8	5.8	15.6	15.6	40.2	40.2	43.3	60	60
5.7	10.2	10.2	17.5	17.5	42	42	44	56	56
6.4	11.4	11.4	20.4	20.4	50	50	52	70	70
PC	PC	PC	PC	PC	PC	PC	PC	PC	PC
15	25	25	38	38	50	50	50	50	50
250	315	400	630[10)]/650[11)]	800[10)]/720[11)]	1 000	1 250	1 600	2000[10)]	2000[10)]
250	315	400	630[10)]/650[11)]	800[10)]/650[11)]	1 000	1 000	1 000		

Technical data, motor operators
Motorized change-over switches
OTM40...125_C_

Motor operator

Data according to IEC 60947			Switch size	40...125
Rated operational voltage U_e	Pollution degree 3		V AC/DC	110 - 240
	50/60 Hz			
Operating voltage range				0.85 - 1.1 x U_e
Operating time[1]	90° I-0, 0-I, 0-II, II-0		s	0.5-1.0
Operating transfer time[1]	180° I-II, II-I		s	1.2-1.5
OFF -time when operating I-II or II-I[1]	180° I-II, II-I		s	0.4-0.8
Nominal current I_n[1]			A	0.2-0.5
Current inrush[1]			A	1.5-3.0
Operating rate	Cycle 0-I-0-II-0			
	Max. continuous		cycles/min	1
	Max. short-time ≤ 10 cycles		cycles/min	10
Overvoltage category				III
Rated impulse withstand voltage U_{imp}			kV	4
Dielectric strength		50 Hz 1 min.	kV	1.5
Impulse command		Min. impulse duration	ms	100
Terminals				
Voltage supply wiring for U_e				PE - N - L
Cross section		Solid/stranded	mm^2	1.5 - 2.5
Short-circuit protection device		Max. MCB	A	C16
Control terminal				C - II - I - O
Cross section		Solid/stranded	mm^2	1.5 - 2.5
Maximum cable length			m	100
Terminal for state information				
Terminal for state information	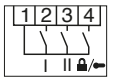	Solid/stranded	mm^2	1.5
Also used with the OMD automatic control unit		Rating	A	3
				AC-1/250V
Common, voltage supply	1			
Position of switch I	2			
Position of switch II	3			
Handle attached or motor operator locked	4			
Short-circuit protection device		Max. MCB	A	C2
Control terminal for OMD automatic control unit				
Control terminal for OMD automatic control unit	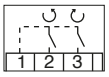	Solid/stranded	mm^2	1.5 - 2.5
Common, voltage supply from motor operator	1		V DC	24
Close switch I or open switch II	2		V DC	24
			mW	500
Close switch II or open switch I	3		V DC	24
			mW	500
Operating temperature			°C	-25...+55
Transportation and storage temperature			°C	-40...+70
Max. altitude			m	2000
Protection degree (front panel)				IP20

[1] Under nominal conditions

Technical data, motor operators
Motorized change-over switches
OTM160...2500_C_

Motor operator

Data according to IEC 60947			Switch size	160...250	315...400	630...800	1000...1600	2000...2500
Rated operational voltage U_e	Pollution degree 3							
	50/60 Hz		V AC			220 - 240		
			V AC/DC			110 - 125		
			V DC			48		
			V DC			24		
Operating voltage range						0,85 - 1,1 x U_e		
Operating time[1]	90° I-0, 0-I, 0-II, II-0	220-240VAC	s	0.4-1.0	0.4-1.0	0.4-1.0	0.5-1.5	0.5-1.5
		110-125VAC/DC	s	0.5-1.5	0.5-1.5	0.6-1.2	0.5-1.5	0.5-1.5
		48VDC	s	0.5-1.5	0.4-1.0	0.6-1.6	0.5-1.5	0.5-1.5
		24VDC	s	0.4-1.0	0.4-1.0	0.5-1.5	1.0-2.0	1.0-2.0
Operating transfer time[1]	180° I-0-II, II-0-I	220-240VAC	s	1.0-2.0	0.9-2.0	0.9-2.0	1.5-3.0	1.5-3.0
		110-125VAC/DC	s	1.1-2.5	1.2-2.6	1.2-3.0	1.5-3.0	1.5-3.0
		48VDC	s	1.4-2.5	1.0-2.0	1.3-3.0	1.5-3.0	1.5-3.0
		24VDC	s	1.0-2.0	1.0-2.0	1.1-2.5	2.0-3.5	2.0-3.5
OFF -time when operating I-II or II-I[1]	180° I-II, II-I	220-240VAC	s	0.4-1.0	0.4-1.0	0.4-1.0	0.5-1.5	0.5-1.5
		110-125VAC/DC	s	0.4-1.1	0.5-1.5	0.6-1.5	0.5-1.5	0.5-1.5
		48VDC	s	0.5-1.1	0.4-1.0	0.7-1.6	0.5-1.5	0.5-1.5
		24VDC	s	0.4-1.0	0.4-1.0	0.5-1.5	0.8-1.7	0.8-1.7
Nominal current I_n[1]		220-240VAC	A	0.2	0.5	0.7	1.8	1.8
		110-125VAC/DC	A	0.5	0.6	0.8	3.0	3.0
		48VDC	A	1.1	2.1	2.6	5.3	5.3
		24VDC	A	3.3	4.2	4	8.0	8.0
Current inrush[1]		220-240VAC	A	1.3	2.1	2.8	7.7	7.7
		110-125VAC/DC	A	2.1	2.5	4.6	13.3	13.3
		48VDC	A	4.4	8.3	8.4	22.4	22.4
		24VDC	A	16.8	17.5	22.4	26.6	26.6
Overload fuse	Type / I_n / Capacity	220-240VAC	mA	T/315/H	T/500/H	T/1000/H	T/2000/H	T/2000/H
		110-125VAC/DC	mA	T/500/H	T/630/H	T/1000/H	T/4000/H	T/4000/H
		48VDC	A	T/1,25/H	T/2,5/H	T/2,5/H	T/5/H	T/5/H
		24VDC	A	T/4,0/H	T/5,0/H	T/5,0/H	T/10/H	T/10/H
	Size		mm	5x20	5x20	5x20	5x20	5x20
Operating rate	Cycle 0-I-0-II-0							
	Max. continuous	220-240VAC	cycles/min	1	1	1	0.5	0.5
		110-125VAC/DC	cycles/min	1	1	1	0.5	0.5
		48VDC	cycles/min	1	1	1	0.5	0.5
		24VDC	cycles/min	1	1	1	0.5	0.5
	Max. short-time ≤ 10 cycles	220-240VAC	cycles/min	10	10	10	5	5
		110-125VAC/DC	cycles/min	10	10	10	5	5
		48VDC	cycles/min	10	10	10	5	5
		24VDC	cycles/min	10	10	10	5	5
Overvoltage category						III		
Rated impulse withstand voltage U_{imp}			kV			4		
Dielectric strength		50 Hz 1 min.	kV			1.5		
Impulse command		Min. impulse duration	ms			100		

Terminals

Voltage supply wiring for U_e						PE - N - L		
Cross section		solid/stranded	mm^2			1.5 - 2.5		
Short-circuit protection device		max. MCB	A			C16		
Control terminal (no SELV)						C - II - I - O		
Cross section		solid/stranded	mm^2			1.5 - 2.5		
Maximum cable length			m			100		

State information of locking (no SELV)

Handle attached or motor operator locked		11-12-14 (C/O)				5A/250V/cosφ=1		
Locking motor operator		23-24 (NO)				5A/250V/cosφ=1		
Short-circuit protection device		Max. MCB	A			C2		
Protection degree						IP20		
Operating temperature			°C			-25…+55		
Transportation and storage temperature			°C			-40…+70		
Max. altitude			m			2000		

[1] Under nominal conditions

Technical data, power circuit
Automatic transfer switches

Technical data for automatic transfer switches, power circuit

OTM_C2D_ (OMD200)	
Rated operational voltage U_e	208 - 415 V AC +/- 20 % + N
Phase - Neutral	120 - 240 V AC +/- 20 %
Rated frequency	50 / 60 Hz +/- 10 %
Rated impulse withstand voltage U_{imp}	6 kV
OTM_C3D_ (OMD300)	
Rated operational voltage U_e	208 - 415 V AC +/- 20 % + N
Phase - Neutral	120 - 240 V AC +/- 20 %
Rated frequency	50 / 60 Hz +/- 10 %
Rated impulse withstand voltage U_{imp}	6 kV
OTM_C8D_ (OMD800)	
Rated operational voltage U_e on 3 phase system	100 - 415 V AC +/- 20 %
Phase - Neutral	57,7 - 240 V AC +/- 20 %
Rated operational voltage U_e on 1 phase system[1)]	57,7 - 240 V AC +/- 20 %
Rated frequency	50 / 60 Hz +/- 10 %
Rated impulse withstand voltage U_{imp}	6 kV
AUX voltage[1)]	24 V DC - 110 V DC (-10 to 15 %)
Operating temperature	-5…+40°C
Transportation and storage temperature	-25…+70°C
Altitude	Max.2000m

[1)] If on 1 phase system the voltage level is between 57,7 – 109 V AC, AUX voltage supply must be used

Technical data, motor operator
Automatic transfer switches

Technical data for motor operator, control circuit

Motor operator, control circuit				OTM160...250	OTM315...400	OTM630...800	OTM1000...1600
Rated operational voltage U [V]	Pollution degree 3	50/60 Hz			220 - 240 V AC		
Operating voltage range					0,8…1,2 x U_e		
Operating times					See the table below		
Nominal current I_n[a]			A	0.2	0.5	0.7	1.8
Current Inrush[a]			A	1.3	2.1	2.8	7.7
Overload fuse	Type / In / Capacity		mA	T/315/H	T/500/H	T/1000/H	T/2000/H
	Size		mm	5x20	5x20	5x20	5x20
Operating rate	Cycle 0 - I - 0 - II - 0						
	Max. continuous		cycles / min	1	1	1	0.5
Max. short-time ≤ 10 cycles			cycles / min	10	10	10	5
Overvoltage category					III		
Rated impulse withstand voltage U_{imp}			kV		4		
Dielectric strength		50 Hz 1 min.	kV		1.5		
Terminals							
Voltage supply wiring for U					PE - N - L		
Cross section		solid/stranded	mm^2		1.5 - 2.5		
Short-circuit protection device		max. MCB	A		C16		
State information of locking (no SELV)							
Cross section		solid/stranded	mm^2		1.5 - 2.5		
Locking motor operator		23-24 (NO)			5A/250V/cosφ=1		
Short-circuit protection device		Max. MCB	A		C2		
Protection degree					IP20		
Operating temperature			°C		-25…+55		
Transportation and storage temperature			°C		-40…+70		
Max. altitude			m		2000		

Operating times

Type	Operating transfer time[a] I - II, II - I [s]	OFF-time when operating[a] I - II, II - I [s]
OTM160…250_C2D_	2.0 - 4.0	0.4 - 1.0
OTM160…250_C3D_	2.0 - 4.0	0.4 - 1.0
OTM160…250_C8D_	1.5 - 3.0	0.4 - 1.0
OTM315…400_C2D_	2.0 - 5.0	0.4 - 1.0
OTM315…400_C3D_	2.0 - 5.0	0.4 - 1.0
OTM315…400_C8D_	1.5 - 3.0	0.4 - 1.0
OTM630…800_C2D_	2.0 - 5.0	0.4 - 1.0
OTM630…800_C3D_	2.0 - 5.0	0.4 - 1.0
OTM630…800_C8D_	1.5 - 3.0	0.4 - 1.0
OTM1000…1600_C2D_	3.0 - 6.0	0.6 - 1.5
OTM1000…1600_C3D_	3.0 - 6.0	0.6 - 1.5
OTM1000…1600_C8D_	2.5 - 4.0	0.6 - 1.5

[a] Under nominal conditions

Technical data
Automatic control units and dual power source

Technical data for automatic control units OMD200/300/800

OMD200 and OMD300	
Rated operational voltage U_e	208 V AC - 480 V AC +/- 20% + N
Phase - Neutral	120 V AC - 277 V AC +/- 20%
Rated frequency	50 / 60 Hz +/- 10%
Voltage sensing precision	5%
Frequency sensing precision	1%
Relay ratings:	
X21, X22	12 A, AC1, 250 V / 12 A, DC1, 24 V
X23, X24	8 A, AC1, 250 V / 8 A, DC1, 24 V
X26, X27, X28	10 A, AC1, 250 V / 5 A, DC1, 24 V
Rated impulse withstand voltage, U_{imp}	6 kV
Overvoltage category	III
Pollution degree	2
OMD800	
Rated operational voltage Ue on 3 phase system	100 V AC - 480 V AC +/- 20%
Phase - Neutral	57,7 V AC - 277 V AC +/- 20%
Rated operational voltage Ue on 1 phase system[1)]	57,7 V AC - 277 V AC +/- 20%
Rated frequency	50 / 60 Hz +/- 10%
Voltage sensing precision	1%
Frequency sensing precision	1%
Relay ratings:	
X21, X22, X24	12 A, AC1, 250 V / 12 A, DC1, 24 V
X23	8 A, AC1, 250 V / 8 A, DC1, 24 V
X29	5 A, AC1, 250 V / 6 A, DC1, 24 V
Rated impulse withstand voltage, U_{imp}	6 kV
Overvoltage category	III
Pollution degree	2
AUX voltage[1)]	24 V DC - 110 V DC (-10% to +15%)
Protection rating for the front panel	IP40
Operating temperature	– 20...+ 60 °C
Transportation and storage temperature	– 25...+ 80 °C
Altitude	Max. 2000m
Humidity	
With condensation	5 %...98 %
Without condensation	5 %...90 %

[1)] If on 1 phase system the voltage level is between 57,7 – 109 V AC, AUX voltage supply must be used

Technical data for dual power source ODPSE230C

Dual power source ODPSE230C	
Rated operational voltage U [V]	220…240 V AC +/- 20%
Rated frequency	50 / 60 Hz +/- 10%
Short-circuit protection device	Max. MCB 4 A
Nominal output current I_n [A]	4 A
Startup time	Max. 1.0 s (with 230 V AC)
Operating transfer time LN1 - LN2 or LN2 - LN1	Max. 0.5 s (with 230 V AC)
Cable size	0,2…2,5 mm^2
Rated impulse withstand voltage, U_{imp}	4 kV
Overvoltage category	III
Pollution degree	3
Protection rating for the front panel	IP20
Operating temperature	– 25...+ 60 °C
Transportation and storage temperature	– 40...+ 70 °C
Altitude	Max. 2000m

Technical data
UL/CSA manual change-over switches OT200...800U_C_ and auxiliary contacts

Manual change-over switches

Data according to UL and CSA		Switch size		OT200U_	OT400U_	OT600U_	OT800U_
Standards				UL98	UL98	UL98	UL98
				CSA 22.2#4	CSA 22.2#4	CSA 22.2#4	CSA 22.2#4
General use ratings - 1- or 3-phase ratings			V	600	600	600	600
			A	200	400	600	800
Horsepower, 3-phase ratings		240V	HP	75	125	200	250
		480V	HP	150	250	450	500
		600V	HP	200	350	500	500
Short-circuit ratings	Required protection	Circuit breaker	kA	14	25	35	42
		Class J/L fuse	kA	65/100	100	100	100
		…fuse size	A	400/200	600	800	800
		Class RK5 fuse	kA			100	
		…fuse size	A			600	
Data according to IEC 60947-3							
Rated insulation voltage and rated operational voltage AC20/DC20	Pollution degree 3		V	1000	1000	1000	1000
Dielectric strength	50 Hz 1min.		kV	10	10	10	10
Rated impulse withstand voltage			kV	12	12	12	12
Rated thermal current and rated operational current AC20/DC20	/ ambient 40°C	In open air	A	250	400	800	1600
..with minimum conductor cross section		Cu	mm^2	120	240	2x240	2x500
Rated operational current, AC-21A		up to 690 V	A	250	400	800	1600
Rated operational current, AC-22A		up to 500 V	A	250	400	800	1600
		690 V	A	250	400	800	1600
Rated operational current, AC-23A		up to 500 V	A	250	400	800	1250
		690 V	A	250	400	800	1250
Rated conditional short-circuit current I_p (r.m.s.) and corresponding max. allowed cut-off current $\hat{i}_c$ peak value[1]	I_p (r.m.s.) : 100 kA, 500 V	$\hat{i}_c$ (peak)	kA	40.5	61.5	90	106
	Max. OFA_ fuse size	gG/aM	A	315/315	500/450	800/800	1250/1250
	I_p (r.m.s.) : 80 kA, 690 V	$\hat{i}_c$ (peak)	kA	40.5	59	83,5	
	Max. OFA_ fuse size	gG/aM	A	355/315	500/500	800/1000	
Rated short-time withstand current	I_{cw} (r.m.s.)	690V, 1s	kA	8	15	20	50
Rated short-circuit making capacity	I_{cm} (peak)	690V	kA	30	65	80	92
Mechanical endurance	Number of operating cycles[2]		Cycles	8000	8000	5000	3000
Mechanical endurance / switch	Number of operations		Oper.	16000	16000	10000	6000
Terminal bolt size	Metric thread diameter x length		mm	M8x25	M10x30	M12x40	M12x60
Terminal tightening torque	Counter torque required		Nm	15...22	30...44	50...75	50...75
Operating torque	3-pole switches		Nm	7	16	27	78
Weight without accessories	3-pole switch		kg	2.8	5.0	13.1	34,8
	4-pole switch		kg	3.5	6.1	15.9	43,3
Data according to IEC 60947-6-1							
Class of equipment				PC	PC	PC	PC
Rated short-time withstand current	I_{cw} (r.m.s.)	690 V 0.1s		15	25	38	50
Rated operational current, AC-31B		up to 415 V	A	250	400	800	1600
Rated operational current, AC-33B		up to 415 V	A	250	400	800	1000

[1] The fuse in single-phase test according to IEC 60269
[2] Operating cycle: O - I - O - II - O

Auxiliary contacts

Technical data for auxiliary contacts according to IEC 60947-5-1

For OA1G_, OA2G_, OA3G_, OA7G_, OA8G_

	AC15		DC12		DC13	
U_e/[V]	I_e/[A]	U_e/[V]	I_e/[A]	P/[W]	I_e/[A]	P/[W]
230	6	24	10	240	2	50
400	4	72	4	290	0.8	60
415	4	125	2	250	0.55	70
690	2	250	0.55	140	0.27	70
		440	0.1	44		

Ordering information
Manual change-over switches, IEC-types

OT16...40F3C



OT63...80F3C



OT100...125F3C



Manual change-over switches, I-O-II -operation, open transition

Including terminal clamps, IP20. Handle and shaft has to be ordered separately. OT 16...80 are UL Listed.

No. of poles	Rated current and power AC-21A/AC-22A ≤ 415V I[A]	AC-21A/AC-22A 400V S[kVA]	AC-23A 400...415V I[A]/P[kW]	Type	Order number	Units/ type [pcs]	Weight/ unit [kg]
3	16	11	16/7.5	OT16F3C	1SCA104816R1001	1	0.25
4	16	11	16/7.5	OT16F4C	1SCA104831R1001	1	0.31
3	25	17	20/9	OT25F3C	1SCA104863R1001	1	0.25
4	25	17	20/9	OT25F4C	1SCA104877R1001	1	0.31
3	40	27	23/11	OT40F3C	1SCA104913R1001	1	0.25
4	40	27	23/11	OT40F4C	1SCA104934R1001	1	0.31
3	63	43	45/22	OT63F3C	1SCA105338R1001	1	0.64
4	63	43	45/22	OT63F4C	1SCA105369R1001	1	0.70
3	80	55	75/37	OT80F3C	1SCA105402R1001	1	0.64
4	80	55	75/37	OT80F4C	1SCA105418R1001	1	0.70
3	100	70	80/37	OT100F3C	1SCA105008R1001	1	0.90
4	100	70	80/37	OT100F4C	1SCA105019R1001	1	1.18
3	125	86	90/45	OT125F3C	1SCA105037R1001	1	0.90
4	125	86	90/45	OT125F4C	1SCA105054R1001	1	1.18

Cable cross section of the change-over switches

Suitable for switches	Cable cross section [mm²]
OT16...40F_C	0.75 ... 10
OT63...80F_C	1.5 ... 35
OT100...125F_C	10 ... 70

Ordering information
Manual change-over switches, IEC-types

OT160...250E03CP



OT160...250E03WCP



OT160...250E04CP



OT160...250E04WCP



OT160...250E33CP



OT160...250E33WCP



Manual change-over switches, I-O-II -operation, open transition

Including a black plastic IP65 I-0-II pistol type handle (see the table below), shaft and bolt set for the cable connection. Handle padlockable in the 0-position, door interlock in the I- and II-positions and when padlocked.

No. of poles	Rated current and power AC-21A/AC-22A ≤415V I[A]	400V S[kVA]	AC-23A 400...415V I[A]/P[kW]	Type	Order number	Units/ type [pcs]	Weight/ unit [kg]
Types -W: with wide phase distance.							
3	160	110	160/90	OT160E03CP	1SCA022772R6510	1	3.3
3	160	110	160/90	OT160E12CP	1SCA022776R9080	1	3.3
3	160	110	160/90	OT160E03WCP	1SCA022772R8210	1	3.6
4	160	110	160/90	OT160E04CP	1SCA022775R9440	1	4.1
4	160	110	160/90	OT160E13CP	1SCA022777R0170	1	4.1
4	160	110	160/90	OT160E04WCP	1SCA022775R0220	1	4.4
6	160	110	160/90	OT160E33CP	1SCA118537R1001	1	5.7
6	160	110	160/90	OT160E33WCP	1SCA118603R1001	1	6.0
3	200	135	200/110	OT200E03CP	1SCA022771R7520	1	3.3
3	200	135	200/110	OT200E12CP	1SCA022776R8510	1	3.3
3	200	135	200/110	OT200E03WCP	1SCA022772R8720	1	3.6
4	200	135	200/110	OT200E04CP	1SCA022771R7280	1	4.1
4	200	135	200/110	OT200E13CP	1SCA022777R0250	1	4.1
4	200	135	200/110	OT200E04WCP	1SCA022775R0650	1	4.4
6	200	135	200/110	OT200E33CP	1SCA118541R1001	1	5.7
6	200	135	200/110	OT200E33WCP	1SCA118607R1001	1	6.0
3	250	170	250/140	OT250E03CP	1SCA022771R3450	1	3.3
3	250	170	250/140	OT250E12CP	1SCA022776R9320	1	3.3
3	250	170	250/140	OT250E03WCP	1SCA022772R8300	1	3.6
4	250	170	250/140	OT250E04CP	1SCA022775R4640	1	4.1
4	250	170	250/140	OT250E13CP	1SCA022777R0330	1	4.1
4	250	170	250/140	OT250E04WCP	1SCA022775R0810	1	4.4
6	250	170	250/140	OT250E33CP	1SCA118551R1001	1	5.7
6	250	170	250/140	OT250E33WCP	1SCA118608R1001	1	6.0

Shafts, handle and bolt kits included as standard

Suitable for switches	Shaft	Handle	Bolt kit
OT160...250_C	OXP6x161	OHB65J6E011	M8x25

Ordering information
Manual change-over switches, IEC-types

OT315...400E03CP



OT315...400E13CP



OT315...400E33CP



OT630...800E03CP



OT630...800E04CP



OT630...800E33CP



Manual change-over switches, I-O-II -operation, open transition

Including a black plastic IP65 I-0-II pistol type handle (see the table below), shaft and bolt set for the cable connection. Handle padlockable in the 0-position, door interlock in the I- and II-positions and when padlocked.

No. of poles	Rated current and power AC-21A/AC-22A ≤ 415V I[A]	400V S[kVA]	AC-23A 400...415V I[A]/P[kW]	Type	Order number	Units/ type [pcs]	Weight/ unit [kg]
Place of mechanism, see the pictures.							
3	315	215	315/160	OT315E03CP	1SCA022772R6780	1	5.9
3	315	215	315/160	OT315E12CP	1SCA022776R9910	1	5.9
4	315	215	315/160	OT315E04CP	1SCA022775R7150	1	7.1
4	315	215	315/160	OT315E13CP	1SCA022777R0410	1	7.1
6	315	215	315/160	OT315E33CP	1SCA118635R1001	1	9.5
3	400	275	400/220	OT400E03CP	1SCA022771R8500	1	5.9
3	400	275	400/220	OT400E12CP	1SCA022776R9590	1	5.9
4	400	275	400/220	OT400E04CP	1SCA022771R8680	1	7.1
4	400	275	400/220	OT400E13CP	1SCA022777R0500	1	7.1
6	400	275	400/220	OT400E33CP	1SCA118629R1001	1	9.5
3	630	435	630/355	OT630E03CP	1SCA022785R6050	1	17.7
3	630	435	630/355	OT630E12CP	1SCA022785R8690	1	17.7
4	630	435	630/355	OT630E04CP	1SCA022785R6130	1	21
4	630	435	630/355	OT630E13CP	1SCA022785R9070	1	21
6	630	435	630/355	OT630E33CP	1SCA118652R1001	1	27.6
3	800	550	800/450	OT800E03CP	1SCA022785R6300	1	17.7
3	800	550	800/450	OT800E12CP	1SCA022785R8850	1	17.7
4	800	550	800/450	OT800E04CP	1SCA022785R6210	1	21
4	800	550	800/450	OT800E13CP	1SCA022785R9230	1	21
6	800	550	800/450	OT800E33CP	1SCA118649R1001	1	27.6

Shafts, handle and bolt kits included as standard

Suitable for switches	Shaft	Handle	Bolt kit
OT315...400_C	OXP12x166	OHB95J12E011	M10x30
OT630...800_C	OXP12x185	OHB125J12E011	M12x40

Ordering information
Manual change-over switches, IEC-types

OT1250E03CP



OT1000...1250E22CP



OT1600E03CP



OT2000...2500E03CP



Manual change-over switches, I-O-II -operation, open transition

Including a black plastic IP65 I-0-II pistol type handle (see the table below), shaft and bolt set for the cable connection. Handle padlockable in the 0-position, door interlock in the I- and II-positions and when padlocked.

No. of poles	Rated current[1] and power AC-21A/AC-22A ≤ 415V I[A]	AC-22A 400V S[kVA]	AC-23A 400...415V I[A]/P[kW]	Type	Order number	Units/ type [pcs]	Weight/ unit [kg]
Place of mechanism, see the pictures.							
3	1000	680	1000/560	OT1000E03CP	1SCA022872R1680	1	48
3	1000	680	1000/560	OT1000E12CP	1SCA103287R1001	1	48
4	1000	680	1000/560	OT1000E04CP	1SCA022872R1500	1	60
4	1000	680	1000/560	OT1000E13CP	1SCA103291R1001	1	60
4	1000	680	1000/560	OT1000E22CP	1SCA103289R1001	1	60
3	1250	850	1250/710	OT1250E03CP	1SCA022872R0790	1	48
3	1250	850	1250/710	OT1250E12CP	1SCA103308R1001	1	48
4	1250	850	1250/710	OT1250E04CP	1SCA022872R1250	1	60
4	1250	850	1250/710	OT1250E13CP	1SCA103313R1001	1	60
4	1250	850	1250/710	OT1250E22CP	1SCA103311R1001	1	60
3	1600	1000	1250/710	OT1600E03CP	1SCA022872R1840	1	51
3	1600	1000	1250/710	OT1600E12CP	1SCA103293R1001	1	51
4	1600	1000	1250/710	OT1600E04CP	1SCA022872R2310	1	63
4	1600	1000	1250/710	OT1600E13CP	1SCA103306R1001	1	63
4	1600	1000	1250/710	OT1600E22CP	1SCA103303R1001	1	63
3	2000	1350		OT2000E03CP	1SCA103908R1001	1	70
3	2000	1350		OT2000E12CP	1SCA103915R1001	1	70
4	2000	1350		OT2000E04CP	1SCA103912R1001	1	86
4	2000	1350		OT2000E13CP	1SCA103918R1001	1	86
4	2000	1350		OT2000E22CP	1SCA103953R1001	1	86
3	2500	1700		OT2500E03CP	1SCA105615R1001	1	70
3	2500	1700		OT2500E12CP	1SCA103891R1001	1	70
4	2500	1700		OT2500E04CP	1SCA103906R1001	1	86
4	2500	1700		OT2500E13CP	1SCA103895R1001	1	86
4	2500	1700		OT2500E22CP	1SCA103902R1001	1	86

[1] OT2000...2500: Category AC-21B

Shafts, handle and bolt kits included as standard

Suitable for switches	Shaft	Handle	Bolt kit
OT1000...2500_C	OXP12x185	OHB200J12PE011	M12x60

Ordering information
Manual change-over switches, IEC-types

OT160...250E03CFP



OT160...250E03WCFP



OT315...400E13CFP



OT630...800E03CFP



Manual change-over switches, I-O-II -operation, fast transition

Including a black plastic IP65 I-0-II pistol type handle (see the table below), shaft and bolt set for the cable connection. Handle not padlockable and no door interlocking. Operating angle 90° to achieve fast switching. Minimum OFF-time between transfer from I-II or II-I is 20 ms.

No. of poles	Rated current and power AC-21A/AC-22A ≤ 415V I[A]	400V S[kVA]	AC-23A 400...415V I[A]/P[kW]	Type	Order number	Units/ type [pcs]	Weight/ unit [kg]
Place of mechanism, see the pictures. Types -W: with wide phase distance.							
3	160	110	160/90	OT160E03CFP	1SCA106086R1001	1	3.3
3	160	110	160/90	OT160E12CFP	1SCA108496R1001	1	3.3
3	160	110	160/90	OT160E03WCFP	1SCA108484R1001	1	3.6
4	160	110	160/90	OT160E04CFP	1SCA108489R1001	1	4.1
4	160	110	160/90	OT160E13CFP	1SCA108502R1001	1	4.1
4	160	110	160/90	OT160E04WCFP	1SCA108492R1001	1	4.4
3	200	135	200/110	OT200E03CFP	1SCA108520R1001	1	3.3
3	200	135	200/110	OT200E12CFP	1SCA108535R1001	1	3.3
3	200	135	200/110	OT200E03WCFP	1SCA107578R1001	1	3.6
4	200	135	200/110	OT200E04CFP	1SCA108528R1001	1	4.1
4	200	135	200/110	OT200E13CFP	1SCA108543R1001	1	4.1
4	200	135	200/110	OT200E04WCFP	1SCA108531R1001	1	4.4
3	250	170	250/140	OT250E03CFP	1SCA108591R1001	1	3.3
3	250	170	250/140	OT250E12CFP	1SCA108609R1001	1	3.3
3	250	170	250/140	OT250E03WCFP	1SCA107577R1001	1	3.6
4	250	170	250/140	OT250E04CFP	1SCA108600R1001	1	4.1
4	250	170	250/140	OT250E13CFP	1SCA108615R1001	1	4.1
4	250	170	250/140	OT250E04WCFP	1SCA108606R1001	1	4.4
3	315	215	315/160	OT315E03CFP	1SCA108629R1001	1	5.9
3	315	215	315/160	OT315E12CFP	1SCA108633R1001	1	5.9
4	315	215	315/160	OT315E04CFP	1SCA114535R1001	1	7.1
4	315	215	315/160	OT315E13CFP	1SCA106436R1001	1	7.1
3	400	275	400/220	OT400E03CFP	1SCA106360R1001	1	5.9
3	400	275	400/220	OT400E12CFP	1SCA108652R1001	1	5.9
4	400	275	400/220	OT400E04CFP	1SCA108650R1001	1	7.1
4	400	275	400/220	OT400E13CFP	1SCA106441R1001	1	7.1
3	630	435	630/355	OT630E03CFP	1SCA106915R1001	1	17.7
3	630	435	630/355	OT630E12CFP	1SCA106963R1001	1	17.7
4	630	435	630/355	OT630E04CFP	1SCA108753R1001	1	21
4	630	435	630/355	OT630E13CFP	1SCA106988R1001	1	21
3	800	550	800/450	OT800E03CFP	1SCA106916R1001	1	17.7
3	800	550	800/450	OT800E12CFP	1SCA106966R1001	1	17.7
4	800	550	800/450	OT800E04CFP	1SCA106945R1001	1	21
4	800	550	800/450	OT800E13CFP	1SCA106983R1001	1	21

Shafts, handle and bolt kits included as standard

Suitable for switches	Shaft	Handle	Bolt kit
OT160...250_CF	OXP6x161	OHB65J6E69	M8x25
OT315...400_CF	OXP12x166	OHB95J12E69	M10x30
OT630...800_CF	OXP12x185	OHB145J12E69	M12x40

Ordering information
Motorized change-over switches, IEC-types

OTM40...125F3C_



OTM40...125F4C_



Change-over switches, motor operation, I-O-II -operation, open transition

Including a handle for manual operation, a storage clip for the handle and male connectors for control circuits.

No. of poles	Rated current AC-21A, AC-22A ≤ 415V, I[A]	Rated power 400V S[kVA]	Rated current AC-31B/ AC-33B 415V, I[A]	Type	Order number	Units/ type [pcs]	Weight/ unit [kg]
Motor voltage U_e 110...240 V AC/DC							
3	40	27	40/40	OTM40F3CMA230V	1SCA120096R1001	1	1.64
4	40	27	40/40	OTM40F4CMA230V	1SCA120102R1001	1	1.86
3	63	43	63/63	OTM63F3CMA230V	1SCA120095R1001	1	1.64
4	63	43	63/63	OTM63F4CMA230V	1SCA120101R1001	1	1.86
3	80	55	80/80	OTM80F3CMA230V	1SCA120093R1001	1	1.64
4	80	55	80/80	OTM80F4CMA230V	1SCA120100R1001	1	1.86
3	100	70	100/80	OTM100F3CMA230V	1SCA120071R1001	1	1.64
4	100	70	100/80	OTM100F4CMA230V	1SCA120098R1001	1	1.86
3	125	86	125/80	OTM125F3CMA230V	1SCA120070R1001	1	1.64
4	125	86	125/80	OTM125F4CMA230V	1SCA120097R1001	1	1.86

Handles included as standard, cable cross section

Suitable for switches	Cable cross section [mm²]	Handle
OTM40F_	2.5...25 or 2 x 2.5...16	OHB65D6CM
OTM63...125F_	10 ... 70	OHB65D6CM

Ordering information
Motorized change-over switches, IEC-types

OTM160...250E2C_



OTM160...250E2WC_



OTM160...250E3C_



OTM160...250E3WC_



OTM315...400E2C_



OTM315...400E3C_



OTM315...400E4C_



Change-over switches, motor operation, I-O-II -operation, open transition

Including a handle for manual operation, bolt kit with nut and washers for all terminals and male connectors for control circuits. Types OTM160...400E_ include a storage clip for the handle and spare fuses. Types OTM160...250E_W are equipped with extended phase distance.

No. of poles	Rated current AC-21A, AC-22A ≤ 415V, I[A]	Rated power 400V S[kVA]	Rated current AC-31B/ AC-33B 415V, I[A]	Type	Order number	Units/ type [pcs]	Weight/ unit [kg]
Motor voltage U_e 220...240 V AC[1)]							
2	160	110	160/160	OTM160E2CM230V	1SCA121216R1001	1	5.7
2	160	110	160/160	OTM160E2WCM230V	1SCA121218R1001	1	5.9
3	160	110	160/160	OTM160E3CM230C	1SCA022845R8610	1	6.6
3	160	110	160/160	OTM160E3WCM230C	1SCA022846R4000	1	6.9
4	160	110	160/160	OTM160E4CM230C	1SCA022848R1510	1	7.5
4	160	110	160/160	OTM160E4WCM230C	1SCA022846R7440	1	7.9
2	200	135	200/200	OTM200E2CM230V	1SCA121209R1001	1	5.7
2	200	135	200/200	OTM200E2WCM230V	1SCA121294R1001	1	5.9
3	200	135	200/200	OTM200E3CM230C	1SCA022845R8960	1	6.6
3	200	135	200/200	OTM200E3WCM230C	1SCA022846R3960	1	6.9
4	200	135	200/200	OTM200E4CM230C	1SCA022846R1590	1	7.5
4	200	135	200/200	OTM200E4WCM230C	1SCA022846R7870	1	7.9
2	250	170	250/250	OTM250E2CM230V	1SCA121211R1001	1	5.7
2	250	170	250/250	OTM250E2WCM230V	1SCA121220R1001	1	5.9
3	250	170	250/250	OTM250E3CM230C	1SCA022845R9260	1	6.6
3	250	170	250/250	OTM250E3WCM230C	1SCA022846R4770	1	6.9
4	250	170	250/250	OTM250E4CM230C	1SCA022846R1910	1	7.5
4	250	170	250/250	OTM250E4WCM230C	1SCA022846R8250	1	7.9
2	315	215	315/315	OTM315E2CM230V	1SCA121221R1001	1	9.7
3	315	215	315/315	OTM315E3CM230C	1SCA022847R1210	1	11.1
4	315	215	315/315	OTM315E4CM230C	1SCA022847R2870	1	12.5
2	400	275	400/400	OTM400E2CM230V	1SCA121226R1001	1	9.7
3	400	275	400/400	OTM400E3CM230C	1SCA022847R1630	1	11.1
4	400	275	400/400	OTM400E4CM230C	1SCA022847R3250	1	12.5

[1)] 2-pole versions, motor voltage U_e 220...240V AC/DC

Handles and bolt kits included as standard

Suitable for switches	Handle	Bolt kit
OTM160...250	OTV250ECMK	M8x25
OTM315...400	OTV400ECMK	M10x30

Ordering information
Motorized change-over switches, IEC-types

OTM630...800E2C_



OTM630...800E3C_



OTM1000...1250E2C_



OTM1000...1250E3C_



OTM1600E2C_



OTM1600E3C_



OTM2000...2500E2C_



OTM2000...2500E3C_



Change-over switches, motor operation, I-O-II -operation, open transition

Including a handle for manual operation, bolt kit with nut and washers for all terminals and male connectors for control circuits. Types OTM630...2500E_ include a storage clip for the handle and spare fuses.

No. of poles	Rated current[1] AC-21A, AC-22A ≤ 415V, I[A]	Rated power 400V S[kVA]	Rated current AC-31B/ AC-33B 415V, I[A]	Type	Order number	Units/ type [pcs]	Weight/ unit [kg]
Motor voltage U_e 220...240 V AC[2]							
2	630	435	650/650	OTM630E2CM230V	1SCA121268R1001	1	19
3	630	435	650/650	OTM630E3CM230C	1SCA103567R1001	1	22
4	630	435	650/650	OTM630E4CM230C	1SCA022873R1990	1	25
2	800	550	720/650	OTM800E2CM230V	1SCA121270R1001	1	19
3	800	550	720/650	OTM800E3CM230C	1SCA103570R1001	1	22
4	800	550	720/650	OTM800E4CM230C	1SCA022872R8340	1	25
2	1000	680	1000/1000	OTM1000E2CM230V	1SCA121279R1001	1	45
3	1000	680	1000/1000	OTM1000E3CM230C	1SCA112677R1001	1	55
4	1000	680	1000/1000	OTM1000E4CM230C	1SCA112703R1001	1	65
2	1250	850	1250/1000	OTM1250E2CM230V	1SCA121293R1001	1	45
3	1250	850	1250/1000	OTM1250E3CM230C	1SCA112676R1001	1	55
4	1250	850	1250/1000	OTM1250E4CM230C	1SCA112702R1001	1	65
2	1600	1000	1600/1000	OTM1600E2CM230V	1SCA121280R1001	1	49
3	1600	1000	1600/1000	OTM1600E3CM230C	1SCA112678R1001	1	59
4	1600	1000	1600/1000	OTM1600E4CM230C	1SCA112704R1001	1	69
2	2000	1350		OTM2000E2CM230V	1SCA121289R1001	1	61
3	2000	1350		OTM2000E3CM230C	1SCA112709R1001	1	78
4	2000	1350		OTM2000E4CM230C	1SCA112712R1001	1	95
2	2500	1700		OTM2500E2CM230V	1SCA121291R1001	1	61
3	2500	1700		OTM2500E3CM230C	1SCA112710R1001	1	78
4	2500	1700		OTM2500E4CM230C	1SCA112713R1001	1	95

[1] OTM2000...2500: Category AC-21B
[2] 2-pole versions, motor voltage U_e 220...240V AC/DC

Handles and bolt kits included as standard

Suitable for switches	Handle	Bolt kit
OTM630...800	OTV800ECMK	M12x40
OTM1000...2500	OTV1000ECMK	M12x60

Ordering information
Motorized change-over switches, IEC-types

OTM160...250E3C_



OTM160...250E3WC_



OTM315...400E3C_



OTM630...800E3C_



OTM1000...1250E3C_

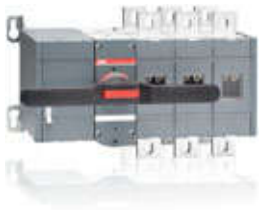

OTM1600E3C_



OTM2000...2500E3C_



Change-over switches, motor operation, I-O-II -operation, open transition

Including a handle for manual operation, bolt kit with nut and washers for all terminals and male connectors for control circuits. Types OTM160...2500E_ include a storage clip for the handle and spare fuses. Types OTM160...250E_W are equipped with extended phase distance.

No. of poles	Rated current[1] AC-21A, AC-22A ≤ 415V, I[A]	Rated power 400V S[kVA]	Rated current AC-31B/ AC-33B 415V, I[A]	Type	Order number	Units/ type [pcs]	Weight/ unit [kg]
Motor voltage U_e 110...125 V AC/DC							
3	160	110	160/160	OTM160E3CM110V	1SCA022845R8530	1	6.6
3	160	110	160/160	OTM160E3WCM110V	1SCA022846R3450	1	6.9
4	160	110	160/160	OTM160E4CM110V	1SCA022846R1080	1	7.5
4	160	110	160/160	OTM160E4WCM110V	1SCA022846R7360	1	7.9
3	200	135	200/200	OTM200E3CM110V	1SCA022845R8880	1	6.6
3	200	135	200/200	OTM200E3WCM110V	1SCA022846R3880	1	6.9
4	200	135	200/200	OTM200E4CM110V	1SCA022846R1410	1	7.5
4	200	135	200/200	OTM200E4WCM110V	1SCA022846R7790	1	7.9
3	250	170	250/250	OTM250E3CM110V	1SCA022845R9180	1	6.6
3	250	170	250/250	OTM250E3WCM110V	1SCA022846R4690	1	6.9
4	250	170	250/250	OTM250E4CM110V	1SCA022846R1830	1	7.5
4	250	170	250/250	OTM250E4WCM110V	1SCA022846R8170	1	7.9
3	315	215	315/315	OTM315E3CM110V	1SCA022847R1120	1	11.1
4	315	215	315/315	OTM315E4CM110V	1SCA022847R2790	1	12.5
3	400	275	400/400	OTM400E3CM110V	1SCA022847R1550	1	11.1
4	400	275	400/400	OTM400E4CM110V	1SCA022847R3170	1	12.5
3	630	435	650/650	OTM630E3CM110V	1SCA022873R1050	1	22
4	630	435	650/650	OTM630E4CM110V	1SCA022873R1810	1	25
3	800	550	720/650	OTM800E3CM110V	1SCA022872R5750	1	22
4	800	550	720/650	OTM800E4CM110V	1SCA022872R8260	1	25
3	1000	680	1000/1000	OTM1000E3CM110V	1SCA113653R1001	1	55
4	1000	680	1000/1000	OTM1000E4CM110V	1SCA113656R1001	1	65
3	1250	850	1250/1000	OTM1250E3CM110V	1SCA113652R1001	1	55
4	1250	850	1250/1000	OTM1250E4CM110V	1SCA113655R1001	1	65
3	1600	1000	1600/1000	OTM1600E3CM110V	1SCA113654R1001	1	59
4	1600	1000	1600/1000	OTM1600E4CM110V	1SCA113657R1001	1	69
3	2000	1350		OTM2000E3CM110V	1SCA113683R1001	1	78
4	2000	1350		OTM2000E4CM110V	1SCA113685R1001	1	95
3	2500	1700		OTM2500E3CM110V	1SCA113684R1001	1	78
4	2500	1700		OTM2500E4CM110V	1SCA113686R1001	1	95

[1] OTM2000...2500: Category AC-21B

Handles and bolt kits included as standard

Suitable for switches	Handle	Bolt kit
OTM160...250	OTV250ECMK	M8x25
OTM315...400	OTV400ECMK	M10x30
OTM630...800	OTV800ECMK	M12x40
OTM1000...2500	OTV1000ECMK	M12x60

Ordering information
Motorized change-over switches, IEC-types

OTM160...250E3C_



OTM160...250E3WC_



OTM315...400E3C_



OTM630...800E3C_



OTM1000...1250E3C_

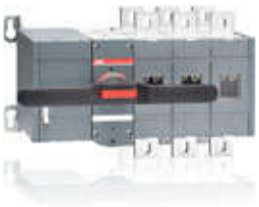

OTM1600E3C_



OTM2000...2500E3C_

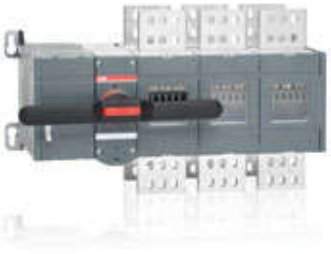

Change-over switches, motor operation, I-O-II -operation, open transition

Including a handle for manual operation, bolt kit with nut and washers for all terminals and male connectors for control circuits. Types OTM160...2500E_ include a storage clip for the handle and spare fuses. Types OTM160...250E_W are equipped with extended phase distance.

No. of poles	Rated current[1] AC-21A, AC-22A ≤ 415V, I[A]	Rated power 400V S[kVA]	Rated current AC-31B/ AC-33B 415V, I[A]	Type	Order number	Units/ type [pcs]	Weight/ unit [kg]
Motor voltage U_e 48 V DC							
3	160	110	160/160	OTM160E3CM48D	1SCA022845R8450	1	6.6
3	160	110	160/160	OTM160E3WCM48D	1SCA022846R3370	1	6.9
4	160	110	160/160	OTM160E4CM48D	1SCA022846R0940	1	7.5
4	160	110	160/160	OTM160E4WCM48D	1SCA022846R7280	1	7.9
3	200	135	200/200	OTM200E3CM48D	1SCA022845R8700	1	6.6
3	200	135	200/200	OTM200E3WCM48D	1SCA022846R3700	1	6.9
4	200	135	200/200	OTM200E4CM48D	1SCA022846R1320	1	7.5
4	200	135	200/200	OTM200E4WCM48D	1SCA022846R7610	1	7.9
3	250	170	250/250	OTM250E3CM48D	1SCA022845R9000	1	6.6
3	250	170	250/250	OTM250E3WCM48D	1SCA022846R4510	1	6.9
4	250	170	250/250	OTM250E4CM48D	1SCA022846R1750	1	7.5
4	250	170	250/250	OTM250E4WCM48D	1SCA022846R8090	1	7.9
4	315	215	315/315	OTM315E4CM48D	1SCA022847R2610	1	11.1
3	400	275	400/400	OTM400E3CM48D	1SCA022847R1470	1	12.5
4	400	275	400/400	OTM400E4CM48D	1SCA022847R3090	1	11.1
3	315	215	315/315	OTM315E3CM48D	1SCA022847R1040	1	12.5
3	630	435	650/650	OTM630E3CM48D	1SCA022873R1300	1	22
4	630	435	650/650	OTM630E4CM48D	1SCA022873R2110	1	25
3	800	550	720/650	OTM800E3CM48D	1SCA022872R6050	1	22
4	800	550	720/650	OTM800E4CM48D	1SCA022872R8510	1	25
3	1000	680	1000/1000	OTM1000E3CM48D	1SCA113663R1001	1	55
4	1000	680	1000/1000	OTM1000E4CM48D	1SCA113666R1001	1	65
3	1250	850	1250/1000	OTM1250E3CM48D	1SCA113662R1001	1	55
4	1250	850	1250/1000	OTM1250E4CM48D	1SCA113665R1001	1	65
3	1600	1000	1600/1000	OTM1600E3CM48D	1SCA113664R1001	1	59
4	1600	1000	1600/1000	OTM1600E4CM48D	1SCA113667R1001	1	69
3	2000	1350		OTM2000E3CM48D	1SCA113689R1001	1	78
4	2000	1350		OTM2000E4CM48D	1SCA113691R1001	1	95
3	2500	1700		OTM2500E3CM48D	1SCA113690R1001	1	78
4	2500	1700		OTM2500E4CM48D	1SCA113692R1001	1	95

[1] OTM2000...2500: Category AC-21B

Handles and bolt kits included as standard

Suitable for switches	Handle	Bolt kit
OTM160...250	OTV250ECMK	M8x25
OTM315...400	OTV400ECMK	M10x30
OTM630...800	OTV800ECMK	M12x40
OTM1000...2500	OTV1000ECMK	M12x60

Ordering information
Motorized change-over switches, IEC-types

OTM160...250E3C_



OTM160...250E3WC_



OTM315...400E3C_



OTM630...800E3C_



OTM1000...1250E3C_



OTM1600E3C_



OTM2000...2500E3C_



Change-over switches, motor operation, I-O-II -operation, open transition

Including a handle for manual operation, bolt kit with nut and washers for all terminals and male connectors for control circuits. Types OTM160...2500E_ include a storage clip for the handle and spare fuses. Types OTM160...250E_W are equipped with extended phase distance.

No. of poles	Rated current[1] AC-21A, AC-22A ≤ 415V, I[A]	Rated power 400V S[kVA]	Rated current AC-31B/ AC-33B 415V, I[A]	Type	Order number	Units/ type [pcs]	Weight/ unit [kg]
Motor voltage U_e 24 V DC							
3	160	110	160/160	OTM160E3CM24D	1SCA022845R8110	1	6.6
3	160	110	160/160	OTM160E3WCM24D	1SCA022846R3290	1	6.9
4	160	110	160/160	OTM160E4CM24D	1SCA022846R0860	1	7.5
4	160	110	160/160	OTM160E4WCM24D	1SCA022846R7100	1	7.9
3	200	135	200/200	OTM200E3CM24D	1SCA022845R8290	1	6.6
3	200	135	200/200	OTM200E3WCM24D	1SCA022846R3610	1	6.9
4	200	135	200/200	OTM200E4CM24D	1SCA022846R1240	1	7.5
4	200	135	200/200	OTM200E4WCM24D	1SCA022846R7520	1	7.9
3	250	170	250/250	OTM250E3CM24D	1SCA022845R8370	1	6.6
3	250	170	250/250	OTM250E3WCM24D	1SCA022846R4420	1	6.9
4	250	170	250/250	OTM250E4CM24D	1SCA022846R1670	1	7.5
4	250	170	250/250	OTM250E4WCM24D	1SCA022846R7950	1	7.9
3	315	215	315/315	OTM315E3CM24D	1SCA022847R0910	1	11.1
4	315	215	315/315	OTM315E4CM24D	1SCA022847R2520	1	12.5
3	400	275	400/400	OTM400E3CM24D	1SCA022847R1390	1	11.1
4	400	275	400/400	OTM400E4CM24D	1SCA022847R2950	1	12.5
3	630	435	650/650	OTM630E3CM24D	1SCA022873R1210	1	22
4	630	435	650/650	OTM630E4CM24D	1SCA022873R2020	1	25
3	800	550	720/650	OTM800E3CM24D	1SCA022872R5910	1	22
4	800	550	720/650	OTM800E4CM24D	1SCA022872R8420	1	25
3	1000	680	1000/1000	OTM1000E3CM24D	1SCA113672R1001	1	55
4	1000	680	1000/1000	OTM1000E4CM24D	1SCA113675R1001	1	65
3	1250	850	1250/1000	OTM1250E3CM24D	1SCA113671R1001	1	55
4	1250	850	1250/1000	OTM1250E4CM24D	1SCA113674R1001	1	65
3	1600	1000	1600/1000	OTM1600E3CM24D	1SCA113673R1001	1	59
4	1600	1000	1600/1000	OTM1600E4CM24D	1SCA113676R1001	1	69
3	2000	1350		OTM2000E3CM24D	1SCA113695R1001	1	78
4	2000	1350		OTM2000E4CM24D	1SCA113697R1001	1	95
3	2500	1700		OTM2500E3CM24D	1SCA113696R1001	1	78
4	2500	1700		OTM2500E4CM24D	1SCA113698R1001	1	95

[1] OTM2000...2500: Category AC-21B

Handles and bolt kits included as standard

Suitable for switches	Handle	Bolt kit
OTM160...250	OTV250ECMK	M8x25
OTM315...400	OTV400ECMK	M10x30
OTM630...800	OTV800ECMK	M12x40
OTM1000...2500	OTV1000ECMK	M12x60

Ordering information
Automatic transfer switches



Automatic transfer switches functionality

	OTM_C2D_	OTM_C3D_	OTM_C8D_
OTM_C_D products overview			
Includes automatic control unit	OMD200_	OMD300_	OMD800_
Manual operation with handle	x	x	x
Local operation with front panel keypad	x	x	x
Automatic transfer switching equipment (ATSE)	x	x	x
Dual power source for the motor operator[1)]	o	x	o
Measurements			
Three phase voltage measurement on LINE 1	x	x	x
Single phase voltage measurement on LINE 1	x	x	x
Three phase voltage measurement on LINE 2	x	x	x
Single phase voltage measurement on LINE 2	x	x	x
Frequency on LINE 1	x	x	x
Frequency on LINE 2	x	x	x
Possibility to check the measurements via LCD			x
Source failure detections			
No voltage	x	x	x
Undervoltage	x	x	x
Overvoltage	x	x	x
Phase missing	x	x	x
Voltage unbalance	x	x	x
Invalid frequency	x	x	x
Incorrect phase sequence			x
Configuration			
By DIP switches	x	x	
By rotary switches	x	x	
By keypad and LCD			x
Voltage threshold setting	x	x	x
Voltage hysteresis setting			x
Frequency threshold setting			x
Frequency hysteresis setting			x
Time delays			
Switching delay	x[2)]	x[2)]	x
Delay on transfer[3)]			x
Dead band time I-II (stop switching to position O)			x
Back-switching delay	x[4)]	x[4)]	x
Dead band time II-I (stop switching to position O)			x
Generator stop delay	x[5)]	x[5)]	x
Status of time delays on the LCD			x

[1)] Dual power source allows the motor operator to be supplied by two separate voltage supplies. This way the motor operator is always energized from the available line.
[2)] Four options: 0, 5, 10 or 30 seconds
[3)] Delaying the switching sequence before transferring to generator, guaranteeing that in cold locations the generator is properly warmed up
[4)] Two options: the duration of back-switching delay is the same as switching delay, i.e. the time delay is same for I - II and II - I, or the back-switching delay is fixed 300 seconds
[5)] Two options: the duration of generator stop delay is the same as Switching delay or fixed 5 min

x = included as standard
o = as an accessory

Ordering information
Automatic transfer switches



Automatic transfer switches functionality

	OTM_C2D_	OTM_C3D_	OTM_C8D_
Features			
Generator start and stop	x	x	x
Off-load test sequence	x	x	x
On-load test sequence	x	x	x
Source status via front panel	x	x	x
Source status via digital outputs			x
Switch position via front panel	x	x	x
LCD[6)]			x
Fieldbus interface[7)]			x
Event/alarm log			x
Counter for number of operations			x
Auxiliary voltage supply[8)]			x
Programmable digital inputs (eight) and digital outputs (six)			x
Secondary load control (load shedding)			x
Digital input - Allow transfer to secondary[9)]			x
Digital input - Generator alarm[10)]			x
Digital input - Remote control to positions I, O and II			x
Operating mode			
Line priority	x[11)]	x[11)]	x[12)]
Manual back-switching[13)]	x	x	x
Automatic operation to position O, in case of source failure[14)]			x
Applications			
Transfer between two transformers	x	x	x
Transfer between a transformer and a generator	x	x	x

[6)] Menus available in eight languages; English, French, German, Italian, Spanish, Russian, Chinese and Finnish
[7)] Two-way communication, bus communication protocol is Modbus
[8)] In case of source failure, the control unit can be supplied with an external auxiliary supply with 24…110 V DC
[9)] Control unit requires an external signal before allowing the transfer to secondary
[10)] Two options for the operating mode after receiving the alarm: control unit either works normally, or initiates generator stop with operation to position O
[11)] Two options: No line priority, or Source 1 is the priority source
[12)] Three options: No line priority, Source 1 or Source 2 is the priority source
[13)] Automatic back-switching to primary source is prevented
[14)] Control unit and motor operator must be energized

x = included as standard
o = as an accessory

Ordering information
Automatic transfer switches, IEC-types

OTM160...250E4WC3D_



OTM630...800E4C2D_



OTM1000...1250E4C3D_



Automatic transfer switches, I-O-II operation, open transition

Including a handle for manual operation, PCB connectors, bolt kit with nuts and washers for all terminals. Types OTM160…1600_C_D_, including a voltage sensing kit on the top of the switch. Voltage sensing kit on the bottom on the switch, available on request, please add letter “B” to the type code. For example, OTM160E4C2D230C ▸ OTM160E4C**B**2D230C. Types OTM160...1600E_ include a storage clip for the handle and spare fuses. Types OTM160...250_WC_D_ are equipped with extended phase distance.

No. of poles	Rated current AC-21A, AC-22A ≤ 415V, I[A]	Rated power 400V S[kVA]	Rated current AC-31B/ AC-33B 415V, I[A]	Type	Order number	Units/ type [pcs]	Weight/ unit [kg]
Automatic operation, OTM_C2D_ types, voltage sensing on the top							
Motor operator voltage U_e = 220...240 V AC[1)]							
4	160	110	160/160	OTM160E4C2D230C	1SCA106230R1001	1	11
4	160	110	160/160	OTM160E4WC2D230C	1SCA101033R1001	1	11
4	200	135	200/200	OTM200E4C2D230C	1SCA106671R1001	1	11
4	200	135	200/200	OTM200E4WC2D230C	1SCA101034R1001	1	11
4	250	170	250/250	OTM250E4C2D230C	1SCA101016R1001	1	11
4	250	170	250/250	OTM250E4WC2D230C	1SCA101035R1001	1	11
4	315	215	315/315	OTM315E4C2D230C	1SCA101059R1001	1	15
4	400	275	400/400	OTM400E4C2D230C	1SCA101060R1001	1	15
4	630	435	650/650	OTM630E4C2D230C	1SCA108434R1001	1	37
4	800	550	720/650	OTM800E4C2D230C	1SCA108439R1001	1	37
4	1000	680	1000/1000	OTM1000E4C2D230C	1SCA112858R1001	1	66
4	1250	850	1250/1000	OTM1250E4C2D230C	1SCA112857R1001	1	66
4	1600	1000	1600/1000	OTM1600E4C2D230C	1SCA112854R1001	1	70
Automatic operation, OTM_C3D_ types, voltage sensing on the top							
Including in-built dual power source for the motor operator. Motor operator voltage Ue = 220...240 V AC[1)]							
4	160	110	160/160	OTM160E4C3D230C	1SCA106305R1001	1	11
4	160	110	160/160	OTM160E4WC3D230C	1SCA106306R1001	1	11
4	200	135	200/200	OTM200E4C3D230C	1SCA106309R1001	1	11
4	200	135	200/200	OTM200E4WC3D230C	1SCA106310R1001	1	11
4	250	170	250/250	OTM250E4C3D230C	1SCA106313R1001	1	11
4	250	170	250/250	OTM250E4WC3D230C	1SCA106314R1001	1	11
4	315	215	315/315	OTM315E4C3D230C	1SCA106317R1001	1	15
4	400	275	400/400	OTM400E4C3D230C	1SCA106318R1001	1	15
4	630	435	650/650	OTM630E4C3D230C	1SCA108726R1001	1	37
4	800	550	720/650	OTM800E4C3D230C	1SCA108728R1001	1	37
4	1000	680	1000/1000	OTM1000E4C3D230C	1SCA112852R1001	1	66
4	1250	850	1250/1000	OTM1250E4C3D230C	1SCA112851R1001	1	66
4	1600	1000	1600/1000	OTM1600E4C3D230C	1SCA112848R1001	1	70

[1)] Under nominal conditions

Handles and bolt kits included as standard

Suitable for switches	Handle	Bolt kit
OTM160...250	OTV250ECMK	M8x25
OTM315...400	OTV400ECMK	M10x30
OTM630...800	OTV800ECMK	M12x40
OTM1000...1600	OTV1000ECMK	M12x60

Ordering information
Automatic transfer switches, IEC-types

OTM160...250E3C8D_



OTM315...400E4C8D_



OTM1600E3C8D_



Automatic transfer switches, I-O-II operation, open transition

Including a handle for manual operation, PCB connectors, bolt kit with nuts and washers for all terminals. Types OTM160…1600_C_D_, including a voltage sensing kit on the top of the switch. Voltage sensing kit on the bottom on the switch, available on request, please add letter “B” to the type code. For example, OTM160E4C8D230C ▸ OTM160E4C**B**8D230C. Types OTM160...1600E_ include a storage clip for the handle and spare fuses. Types OTM160...250_ WC_D_ are equipped with extended phase distance.

No. of poles	Rated current AC-21A, AC-22A ≤ 415V, I[A]	Rated power 400V S[kVA]	Rated current AC-31B/ AC-33B 415V, I[A]	Type	Order number	Units/ type [pcs]	Weight/ unit [kg]
Automatic operation, OTM_C8D_ types, voltage sensing on the top							
Motor operator voltage U_s = 220...240 V AC[1]							
3	160	110	160/160	OTM160E3C8D230C	1SCA101017R1001	1	10
3	160	110	160/160	OTM160E3WC8D230C	1SCA101036R1001	1	10
4	160	110	160/160	OTM160E4C8D230C	1SCA101020R1001	1	11
4	160	110	160/160	OTM160E4WC8D230C	1SCA101039R1001	1	11
3	200	135	200/200	OTM200E3C8D230C	1SCA101018R1001	1	10
3	200	135	200/200	OTM200E3WC8D230C	1SCA101037R1001	1	10
4	200	135	200/200	OTM200E4C8D230C	1SCA101021R1001	1	11
4	200	135	200/200	OTM200E4WC8D230C	1SCA101040R1001	1	11
3	250	170	250/250	OTM250E3C8D230C	1SCA101019R1001	1	10
3	250	170	250/250	OTM250E3WC8D230C	1SCA101038R1001	1	10
4	250	170	250/250	OTM250E4C8D230C	1SCA101022R1001	1	11
4	250	170	250/250	OTM250E4WC8D230C	1SCA101041R1001	1	11
3	315	215	315/315	OTM315E3C8D230C	1SCA101062R1001	1	14
4	315	215	315/315	OTM315E4C8D230C	1SCA101063R1001	1	15
3	400	275	400/400	OTM400E3C8D230C	1SCA101061R1001	1	14
4	400	275	400/400	OTM400E4C8D230C	1SCA101064R1001	1	15
3	630	435	650/650	OTM630E3C8D230C	1SCA108452R1001	1	34
4	630	435	650/650	OTM630E4C8D230C	1SCA108453R1001	1	37
3	800	550	720/650	OTM800E3C8D230C	1SCA108454R1001	1	34
4	800	550	720/650	OTM800E4C8D230C	1SCA108455R1001	1	37
3	1000	680	1000/1000	OTM1000E3C8D230C	1SCA112868R1001	1	57
4	1000	680	1000/1000	OTM1000E4C8D230C	1SCA112861R1001	1	66
3	1250	850	1250/1000	OTM1250E3C8D230C	1SCA112862R1001	1	57
4	1250	850	1250/1000	OTM1250E4C8D230C	1SCA112864R1001	1	66
3	1600	1000	1600/1000	OTM1600E3C8D230C	1SCA112866R1001	1	60
4	1600	1000	1600/1000	OTM1600E4C8D230C	1SCA112867R1001	1	70

[1] Under nominal conditions

Handles and bolt kits included as standard

Suitable for switches	Handle	Bolt kit
OTM160...250	OTV250ECMK	M8x25
OTM315...400	OTV400ECMK	M10x30
OTM630...800	OTV800ECMK	M12x40
OTM1000...1600	OTV1000ECMK	M12x60

Ordering information
Manual change-over switches, IEC-types

OT160...250E03CLP



OT160...250E03WCLP



OT315...400E03CLP



Manual change-over switches, I - I+II - II -operation, closed transition

The OT160…2500E_CL change-over switches operate on a closed transition principle, i.e. make-before-break operation without OFF-position. Between positions I and II, there is a position I+II where both switches are closed simultaneously. The overlapping time when both contacts are closed is minimum 20 ms. Operating angle of the handle is 90˚. Including a black plastic IP65 I - I+II - II pistol type handle (see the table below), shaft and bolt set for the cable connection. Handle not padlockable and no door interlocking.

No. of poles	Rated current and power AC-21A/AC-22A ≤ 415V I[A]	AC-21A/AC-22A 400V S[kVA]	AC-23A 400...415V I[A]/P[kW]	Type	Order number	Units/ type [pcs]	Weight/ unit [kg]
Place of mechanism, see the picture. Types -W: with wide phase distance.							
3	160	110	160/90	OT160E03CLP	1SCA108468R1001	1	3.3
3	160	110	160/90	OT160E12CLP	1SCA108498R1001	1	3.3
3	160	110	160/90	OT160E03WCLP	1SCA108486R1001	1	3.6
4	160	110	160/90	OT160E04CLP	1SCA108491R1001	1	4.1
4	160	110	160/90	OT160E13CLP	1SCA108504R1001	1	4.1
4	160	110	160/90	OT160E04WCLP	1SCA108494R1001	1	4.4
3	200	135	200/110	OT200E03CLP	1SCA108522R1001	1	3.3
3	200	135	200/110	OT200E12CLP	1SCA108537R1001	1	3.3
3	200	135	200/110	OT200E03WCLP	1SCA108525R1001	1	3.6
4	200	135	200/110	OT200E04CLP	1SCA108530R1001	1	4.1
4	200	135	200/110	OT200E13CLP	1SCA108548R1001	1	4.1
4	200	135	200/110	OT200E04WCLP	1SCA108532R1001	1	4.4
3	250	170	250/140	OT250E03CLP	1SCA108593R1001	1	3.3
3	250	170	250/140	OT250E12CLP	1SCA108611R1001	1	3.3
3	250	170	250/140	OT250E03WCLP	1SCA107576R1001	1	3.6
4	250	170	250/140	OT250E04CLP	1SCA108605R1001	1	4.1
4	250	170	250/140	OT250E13CLP	1SCA108618R1001	1	4.1
4	250	170	250/140	OT250E04WCLP	1SCA108607R1001	1	4.4
3	315	215	315/160	OT315E03CLP	1SCA108630R1001	1	5.9
3	315	215	315/160	OT315E12CLP	1SCA106419R1001	1	5.9
4	315	215	315/160	OT315E04CLP	1SCA106404R1001	1	7.1
4	315	215	315/160	OT315E13CLP	1SCA106443R1001	1	7.1
3	400	275	400/220	OT400E03CLP	1SCA108641R1001	1	5.9
3	400	275	400/220	OT400E12CLP	1SCA106423R1001	1	5.9
4	400	275	400/220	OT400E04CLP	1SCA106405R1001	1	7.1
4	400	275	400/220	OT400E13CLP	1SCA106447R1001	1	7.1

Shafts, handles and bolt kits included as standard

Suitable for switches	Shaft	Handle	Bolt kit
OT160...250_CL	OXP6x161	OHB65J6E65	M8x25
OT315...400_CL	OXP12x166	OHB95J12E65	M10x30

Ordering information
Manual change-over switches, IEC-types

OT630...800E03CLP



Manual change-over switches, I - I+II - II -operation, closed transition

The OT160…2500E_CL change-over switches operate on a closed transition principle, i.e. make-before-break operation without OFF-position. Between positions I and II, there is a position I+II where both switches are closed simultaneously. The overlapping time when both contacts are closed is minimum 20 ms. Operating angle of the handle is 90˚. Including a black plastic IP65 I - I+II - II pistol type handle (see the table below), shaft and bolt set for the cable connection. Handle not padlockable and no door interlocking.

No. of poles	Rated current[1] and power AC-21A/AC-22A ≤ 415V I[A]	AC-21A/AC-22A 400V S[kVA]	AC-23A 400...415V I[A]/P[kW]	Type	Order number	Units/ type [pcs]	Weight/ unit [kg]
3	630	435	630/355	OT630E03CLP	1SCA106917R1001	1	17.7
3	630	435	630/355	OT630E12CLP	1SCA106968R1001	1	17.7
4	630	435	630/355	OT630E04CLP	1SCA106947R1001	1	21
4	630	435	630/355	OT630E13CLP	1SCA106981R1001	1	21
3	800	550	800/450	OT800E03CLP	1SCA106928R1001	1	17.7
3	800	550	800/450	OT800E12CLP	1SCA106973R1001	1	17.7
4	800	550	800/450	OT800E04CLP	1SCA106952R1001	1	21
4	800	550	800/450	OT800E13CLP	1SCA106976R1001	1	21
3	1000	680	1000/560	OT1000E03CLP	1SCA117221R1001	1	48
3	1000	680	1000/560	OT1000E12CLP	1SCA117608R1001	1	48
4	1000	680	1000/560	OT1000E04CLP	1SCA117224R1001	1	60
4	1000	680	1000/560	OT1000E13CLP	1SCA117677R1001	1	60
3	1250	850	1250/710	OT1250E03CLP	1SCA117222R1001	1	48
3	1250	850	1250/710	OT1250E12CLP	1SCA117610R1001	1	48
4	1250	850	1250/710	OT1250E04CLP	1SCA117225R1001	1	60
4	1250	850	1250/710	OT1250E13CLP	1SCA117678R1001	1	60
3	1600	1000	1250/710	OT1600E03CLP	1SCA117223R1001	1	51
3	1600	1000	1250/710	OT1600E12CLP	1SCA117611R1001	1	51
4	1600	1000	1250/710	OT1600E04CLP	1SCA117226R1001	1	63
4	1600	1000	1250/710	OT1600E13CLP	1SCA117615R1001	1	63
3	2000	1350		OT2000E03CLP	1SCA117250R1001	1	70
3	2000	1350		OT2000E12CLP	1SCA117617R1001	1	70
4	2000	1350		OT2000E04CLP	1SCA117251R1001	1	86
4	2000	1350		OT2000E13CLP	1SCA117620R1001	1	86
3	2500	1700		OT2500E03CLP	1SCA117249R1001	1	70
3	2500	1700		OT2500E12CLP	1SCA117619R1001	1	70
4	2500	1700		OT2500E04CLP	1SCA117252R1001	1	86
4	2500	1700		OT2500E13CLP	1SCA117622R1001	1	86

[1] OT2000...2500: Category AC-21B

Shafts, handles and bolt kits included as standard

Suitable for switches	Shaft	Handle	Bolt kit
OT630...800_CL	OXP12x185	OHB145J12E65	M12x40
OT1000…2500_CL	OXP12x185	OHB200J12PE65	M12x60

Ordering information
Manual change-over switches, UL/CSA -types

OT200U03CP



OT400U04CP



OT600U03CP



Change-over switches, I-O-II -operation, open transition

The change-over switches include a black handle IP65; see the table below, Nema type 1, 3R, 12, a shaft and a bolt set for the cable connection and a set of phase separators.

No. of poles	UL98 600V general use [A]	Rated current IEC60947-3 ≤ 690 V AC-21-23A [A]	Rated current IEC60947-6-1 ≤ 415V AC-31B/ AC-33B [A]	Type	Order number	Units/ type [pcs]	Weight/ unit [kg]
3	200	250	250/250	OT200U03CP	1SCA022771R5910	1	3.6
4	200	250	250/250	OT200U04CP	1SCA022771R6210	1	4.4
3	400	400	400/400	OT400U03CP	1SCA022771R2810	1	6.2
4	400	400	400/400	OT400U04CP	1SCA022771R2300	1	8.1
3	600	800	800/800	OT600U03CP	1SCA022785R5320	1	17.9
4	600	800	800/800	OT600U04CP	1SCA022785R5410	1	21
3	800	800	1600/1000	OT800U03CP	1SCA104031R1001	1	51
4	800	800	1600/1000	OT800U04CP	1SCA104036R1001	1	63

Shafts, handles and bolt kits included as standard

The handles are equipped with door interlock function in both I- and II-position and when padlocked. Padlocking possibility in O-position with 3 padlocks, bail dia Ø 5...10 mm. Indication I-O-II. Nema type 1, 3R, 12.

Suitable for switches	Shaft	Handle	Bolt kit
OT200U_	OXP6x161	OHB65J6E011	M8x25
OT400U_	OXP12x166	OHB95J12E011	M10x30
OT600U_	OXP12x185	OHB125J12E011	M12x40
OT800U_	OXP12X185	OHB200J12PE011	M12x60

Selection overview
Accessories

OT16F...OT125F_C

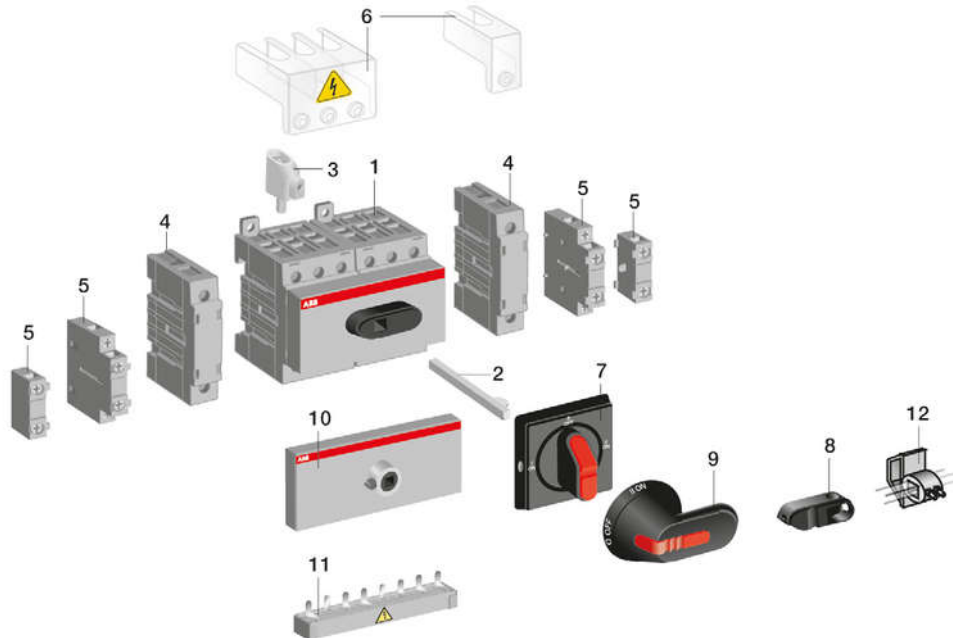

S07157

1 Manual change-over switch | 2 Extended shaft | 3 Terminal clamp | 4 Fourth pole | 5 Auxiliary contact | 6 Terminal shroud | 7 Selector type handle | 8 Handle knob | 9 Pistol type handle | 10 Conversion kit | 11 Parallel connection kit | 12 Cam attachment for interlocking

OT160...OT2500_C

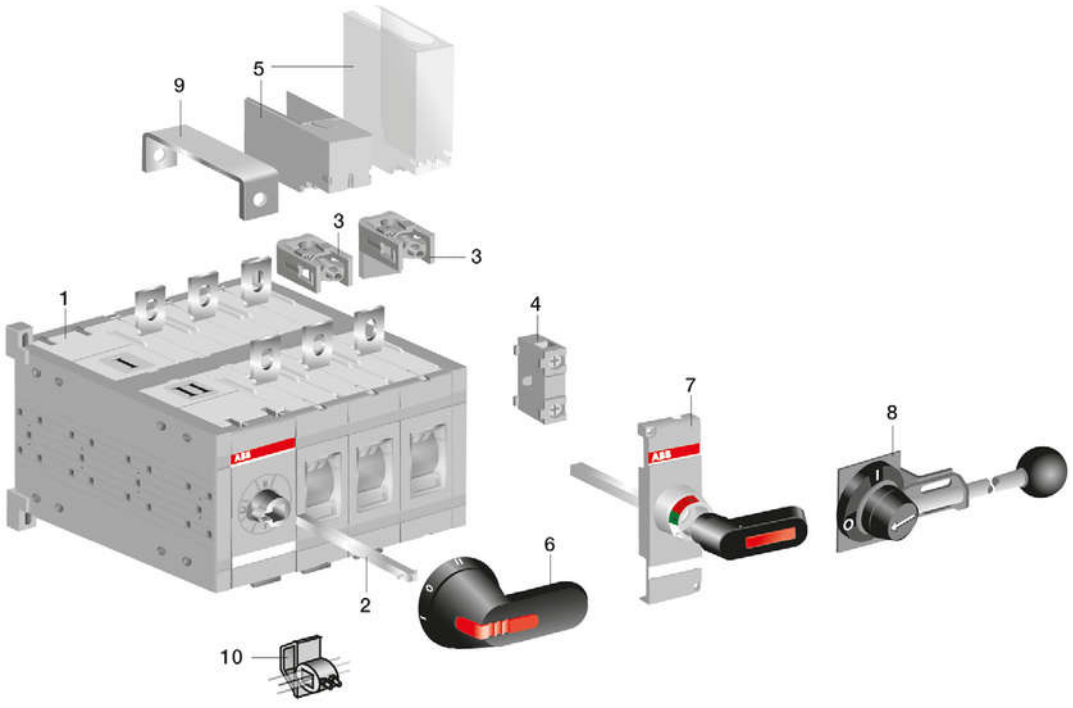

S07158

1 Manual change-over switch | 2 Extended shaft | 3 Terminal clamp | 4 Auxiliary contact | 5 Terminal shroud | 6 Pistol type handle | 7 Direct mounting type handle | 8 Metallic hadle | 9 Bridging bar | 10 Cam attachment for interlocking

Selection overview
Accessories

OTM40F...OTM125F_C

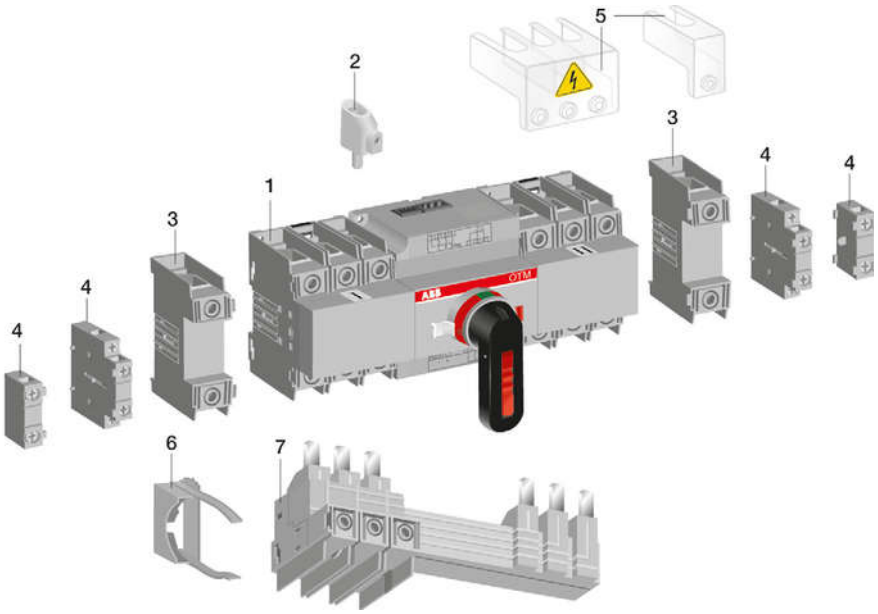

S07159

1 Motorized change-over switch | 2 Terminal clamp | 3 Fourth pole | 4 Auxiliary contact | 5 Terminal shroud | 6 Handle storage clip | 7 Parallel connection kit

OTM160...OTM2500_C

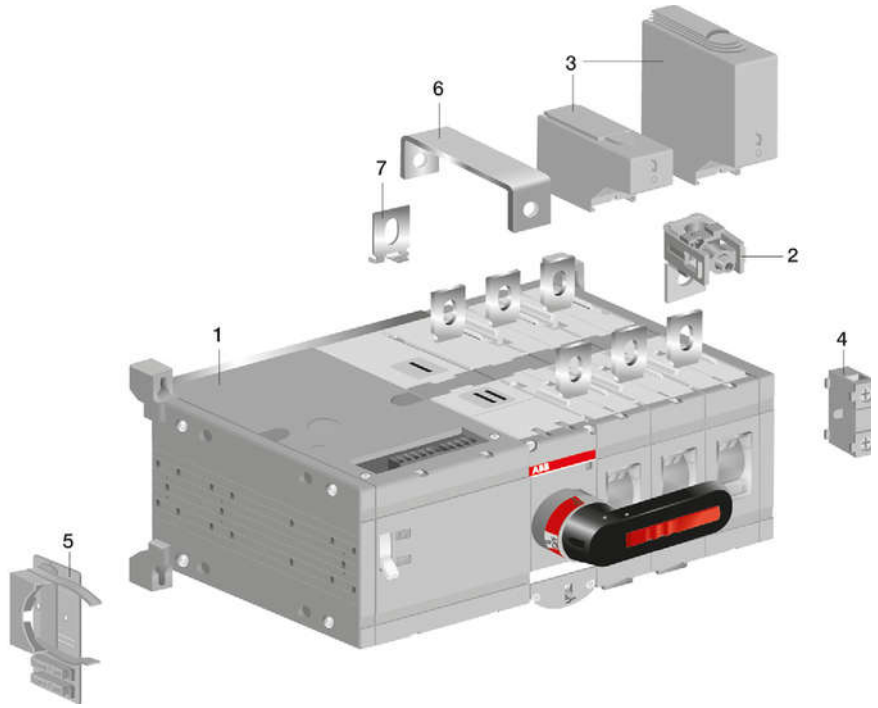

S07160

1 Motorized change-over switch | 2 Terminal clamp | 3 Terminal shroud | 4 Auxiliary contact | 5 Storage for handle and fuses | 6 Bridging bar | 7 Voltage sensing connectors

Selection overview
Accessories

OTM160...OTM1600_D_C

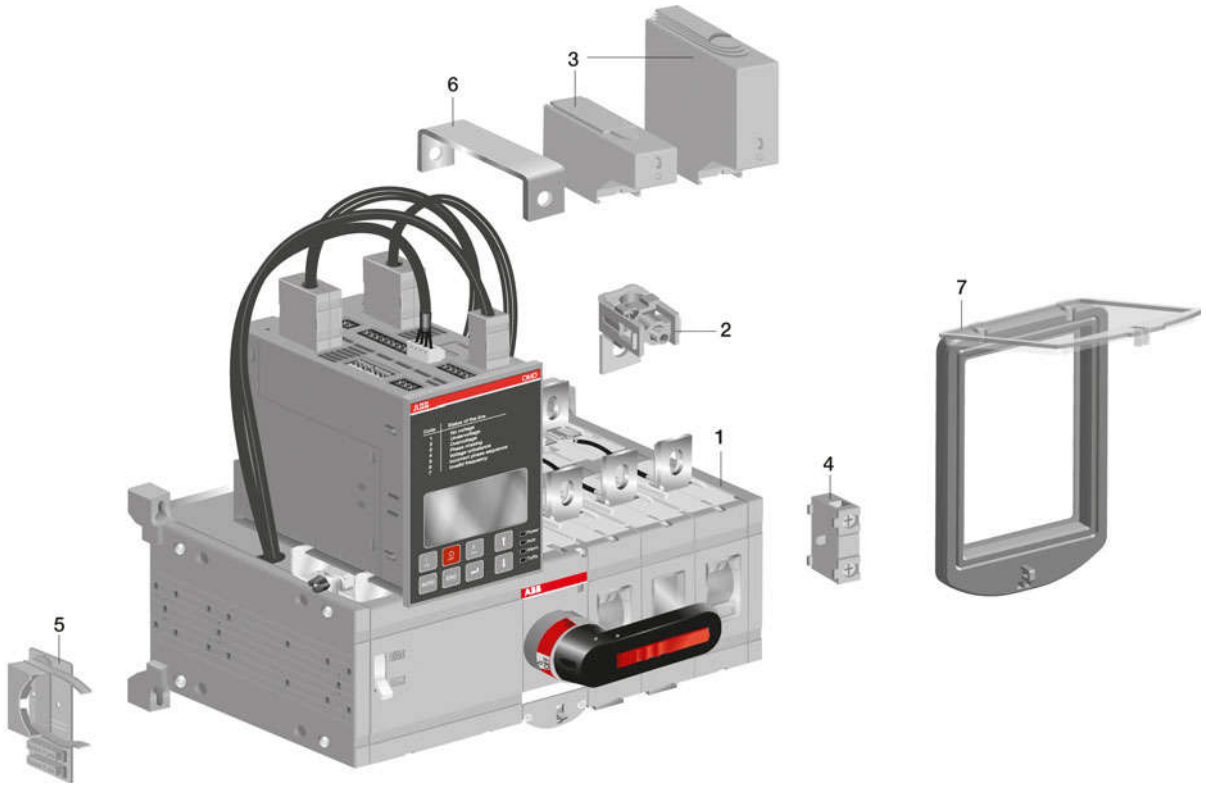

SG7161

1 Automatic transfer switch | 2 Terminal clamp | 3 Terminal shroud | 4 Auxiliary contact | 5 Storage for handle and fuses | 6 Bridging bar | 7 Cover plate

Ordering information
Accessories

OHRS2_
S01368A



OHRS3_
S01369A

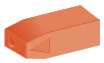

OHBS9_
S00535A

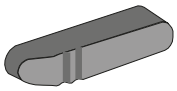

OHBS11
S01473A



OHBS12
S01472A



Handle knobs

No shaft needed, direct mounting on the top of the switch.

Suitable for switches	Colour	Type	Order number	Units/ type [pcs]	Weight/ unit [kg]
Padlockable in 0-position					
OT16...80F_C	Black	OHBS2/1	1SCA109090R1001	1	0.01
OT16...80F_C	Black	OHBS2	1SCA109089R1001	10	0.01
OT16...80F_C	Red	OHRS2/1	1SCA108599R1001	1	0.01
OT16...80F_C	Red	OHRS2	1SCA108598R1001	10	0.01
OT16...80F_C	Black	OHBS12/1	1SCA109094R1001	1	0.01
OT16...80F_C	Black	OHBS12	1SCA108252R1001	10	0.01
OT16...80F_C	Red	OHRS12/1	1SCA109097R1001	1	0.01
OT16...80F_C	Red	OHRS12	1SCA108253R1001	10	0.01
OT100...125F_C	Black	OHBS11/1	1SCA109093R1001	1	0.02
OT100...125F_C	Black	OHBS11	1SCA109092R1001	10	0.02
Non-padlockable					
OT16...80F_C	Black	OHBS3/1	1SCA108319R1001	1	0.01
OT16...80F_C	Black	OHBS3	1SCA108320R1001	10	0.01
OT16...80F_C	Red	OHRS3/1	1SCA108688R1001	1	0.01
OT16...80F_C	Red	OHRS3	1SCA108667R1001	10	0.01
OT100...125F_C	Black	OHBS9/1	1SCA108689R1001	1	0.01
OT100...125F_C	Black	OHBS9	1SCA108665R1001	10	0.01
OT100...125F_C	Red	OHRS9/1	1SCA108690R1001	1	0.01
OT100...125F_C	Red	OHRS9	1SCA108666R1001	10	0.01

Ordering information
Accessories

OHBS2_
S01520A



OHY_
S07165



OHB_
S07164

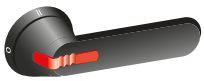

OHB274_
S07162

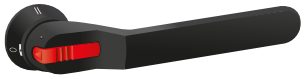

OHB200_P_
S07163



External handles

Selector handle, indication I-O-II

IP65, Nema type 1, 3R, 12. Padlockable in O -position with maximum three padlocks with bail diameter 5...8 mm (two lower holes) and 5...6.3 mm (the upper hole). Door interlock in I- and II-position and when padlocked in O-position. The type and ordering numbers are for one piece.

Suitable for switches	Colour	Shaft diameter [mm]	Type	Order number	Delivery batch [pcs]	Weight/ unit [kg]
OT16...125F_C	Black	6	OHBS2AJE011	1SCA105220R1001	1	0.07
OT16...125F_C	Red-yellow	6	OHYS2AJE011	1SCA105301R1001	1	0.07

Pistol type handle, plastic, indication I-O-II

Units / type = 1 pc.

Suitable for switches	Colour	Shaft diameter [mm]	Type	Order number	Delivery batch [pcs]	Weight/ unit [kg]
Padlockable in all positions						
IP65, Nema type 1, 3R, 12. Door interlock in I- and II-position and when padlocked.						
Padlocking possibility with three padlocks, bail dia Ø 5...10 mm.						
OT16...125F_C	Black	6	OHB45J6E311	1SCA022817R2130	1	0.10
OT16...125F_C	Red-yellow	6	OHY45J6E311	1SCA022817R2300	1	0.10
OT160...250_C	Black	6	OHB65J6E311	1SCA022662R4730	1	0.12
OT315...400_C	Black	12	OHB95J12E311	1SCA022779R2140	1	0.12
OT630...800_C	Black	12	OHB125J12E311	1SCA022615R1730	1	0.14
OT1000...2500_C	Black	12	OHB200J12PE311	1SCA104685R1001	1	0.40
Padlockable in the O-position						
IP65, Nema type 1, 3R, 12. Door interlock in I- and II-position and when padlocked.						
Padlocking possibility with three padlocks, bail dia Ø 5...10 mm.						
OT16...125F_C	Black	6	OHB45J6E011	1SCA022594R7110	1	0.10
OT16...125F_C	Red-yellow	6	OHY45J6E011	1SCA022817R2210	1	0.10
OT160...250_C	Black	6	OHB65J6E011	1SCA022383R2480	1	0.12
OT160...250_C	Red-yellow	6	OHY65J6E011	1SCA022779R1840	1	0.12
OT315...400_C	Black	12	OHB95J12E011	1SCA022621R0760	1	0.12
OT315...400_C	Red-yellow	12	OHY95J12E011	1SCA022621R0920	1	0.12
OT630...800_C	Black	12	OHB125J12E011	1SCA022589R3340	1	0.14
OT630...800_C	Red-yellow	12	OHY125J12E011	1SCA022615R1650	1	0.14
OT1000...2500_C	Black	12	OHB274J12E011	1SCA122306R1001	1	0.54
OT1000...2500_C	Black	12	OHB200J12PE011	1SCA022873R4230	1	0.40
OT1000...2500_C	Red-yellow	12	OHY200J12PE011	1SCA104686R1001	1	0.40
Handle not padlockable and no door interlocking						
IP65, operating angle 90°.						
OT160...250_CF	Black	6	OHB65J6E69	1SCA112052R1001	1	0.12
OT315...400_CF	Black	12	OHB95J12E69	1SCA112058R1001	1	0.12
OT630...800_CF	Black	12	OHB145J12E69	1SCA112066R1001	1	0.14

Ordering information
Accessories

OHB_
S07166

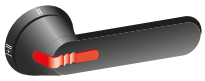

OHB200_P_
S07167



YASDA_
S07168

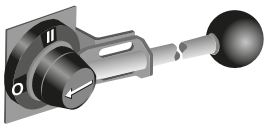

External handles

Pistol type handle, plastic, indication I - I+II - II

IP65, operating angle 90°.The type and ordering numbers are for one piece.

Suitable for switches	Colour	Shaft diameter [mm]	Type	Order number	Delivery batch [pcs]	Weight/ unit [kg]
Handle not padlockable and no door interlocking						
OT160...250_CL	Black	6	OHB65J6E65	1SCA112050R1001	1	0.12
OT315...400_CL	Black	12	OHB95J12E65	1SCA112056R1001	1	0.12
OT630...800_CL	Black	12	OHB145J12E65	1SCA112063R1001	1	0.14
OT1000...2500_CL	Black	12	OHB200J12PE65	1SCA112078R1001	1	0.40

Metallic handles, indication I-O-II

IP65, Nema types 1, 3R, 4, 4X, 12. Padlockable with 3 padlocks in OFF- position, door interlock in I- and II- position.

Handle length [mm]	Colour	Shaft diameter [mm]	Type	Order number	Units/ type [pcs]	Weight/ unit [kg]
220	Metal	12	YASDA21	1SCA022098R9420	1	0.68
320	Metal	12	YASDA6	1SCA022071R2890	1	0.80

Ordering information
Accessories

OTV_



OTVS1



Handles, direct mounting

Includes a shaft and a mechanism cover. The type and ordering numbers are for one piece.

Plastic handle, indication I-O-II

Suitable for switches	Colour	Type	Order number	Delivery batch [pcs]	Weight/ unit [kg]
Padlockable with three padlocks in 0-position.					
OT160…250_C	Black	OTV250ECK	1SCA022783R0090	1	0.08
OT315…400_C	Black	OTV400ECK	1SCA022783R0170	1	0.26
OT630…800_C	Black	OTV800ECK	1SCA022797R2470	1	0.30
OT1000…2500_C	Black	OTV1000ECK	1SCA107481R1001	1	0.75
Includes a shaft (no mechanism cover)					
OTM40...125F_C	Black	OHB65D6CM	1SCA022807R9430	1	0.12
Padlockable with three padlocks in 0-position. Types -ECMK include also microswitches.					
OTM160…250_C	Black	OTV250ECMK	1SCA022804R0570	1	0.10
OTM315…400_C	Black	OTV400ECMK	1SCA022843R2900	1	0.28
OTM630…800_C	Black	OTV800ECMK	1SCA022804R3410	1	0.32
OTM1000…2500_C	Black	OTV1000ECMK	1SCA111301R1001	1	0.77
Handle not padlockable, operating angle 90°.					
OT160…250_CF	Black	OTV250ECFK	1SCA113141R1001	1	0.08
OT315…400_CF	Black	OTV400ECFK	1SCA113147R1001	1	0.26
OT630…800_CF	Black	OTV800ECFK	1SCA113151R1001	1	0.30

Plastic handle, indication I - I+II - II

Suitable for switches	Colour	Type	Order number	Delivery batch [pcs]	Weight/ unit [kg]
Handle not padlockable, operating angle 90°.					
OT160…250_CL	Black	OTV250ECLK	1SCA113137R1001	1	0.08
OT315…400_CL	Black	OTV400ECLK	1SCA113143R1001	1	0.26
OT630…800_CL	Black	OTV800ECLK	1SCA113148R1001	1	0.30
OT1000...2500_CL	Black	OTV1000ECLK	1SCA113152R1001	1	0.75

Handle and spare fuse storage clip

OTM40...125F_, the handle can be stored in the handle storage clip OTVS0. The clip can be fixed to a panel frame using the included adhesive tape.
OTM160…2500E_, the handle and two spare fuses can be stored in the OTVS1 and OTVS2. OTVS1 and OTVS2 can be installed onto the left side of the switch. Snap-on mounting, no tools required. On OTM1000...2500E_, the size of the handle prevents the installation onto the switch frame. However, the handle clip can be installed separately onto the panel frame and the fuse holder clip onto the switch frame.

Suitable for switches	Type	Order number	Units/ type [pcs]	Weight/ unit [kg]
OTM40...125F	OTVS0	1SCA117524R1001	1	0.02
OTM160…250E_	OTVS1	1SCA111413R1001	1	0.02
OTM315…2500E_	OTVS2	1SCA111414R1001	1	0.04

Ordering information
Accessories

OXS6X_
S01026A

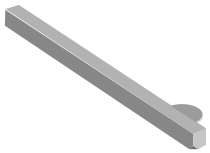

OXP6X_
S00050A

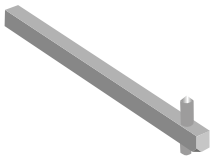

Extended shafts

The type and ordering numbers are for one piece.

Shafts for selector type handles

Suitable for switches	Installation depth [mm]	Length [mm]	Type	Order number	Delivery batch [pcs]	Weight/ unit [kg]
Shaft diameter 6 mm						
OT16...40F_C	103...114	85	OXS6X85	1SCA101647R1001	10	0.03
OT16...40F_C	123...134	105	OXS6X105	1SCA108043R1001	10	0.03
OT16...40F_C	138...149	120	OXS6X120	1SCA101654R1001	10	0.04
OT16...40F_C	148...159	130	OXS6X130	1SCA101655R1001	10	0.04
OT63...80F_C	121...131	85	OXS6X85	1SCA101647R1001	10	0.03
OT63...80F_C	141...151	105	OXS6X105	1SCA108043R1001	10	0.03
OT63...80F_C	156...166	120	OXS6X120	1SCA101654R1001	10	0.04
OT63...80F_C	166...176	130	OXS6X130	1SCA101655R1001	10	0.04
OT 100...125F_C	120...130	85	OXS6X85	1SCA101647R1001	10	0.03
OT 100...125F_C	140...150	105	OXS6X105	1SCA108043R1001	10	0.03
OT 100...125F_C	155...165	120	OXS6X120	1SCA101654R1001	10	0.04
OT 100...125F_C	165...175	130	OXS6X130	1SCA101655R1001	10	0.04

Shafts for pistol type handles

Suitable for switches	Installation depth [mm]	Length [mm]	Type	Order number	Delivery batch [pcs]	Weight/ unit [kg]
Shaft diameter 6 mm						
OT16...40F_C	164...175	150	OXP6X150	1SCA022295R5600	10	0.05
OT16...40F_C	184...195	170	OXP6X170	1SCA108224R1001	10	0.05
OT16...40F_C	279...290	265	OXP6X265	1SCA108225R1001	10	0.08
OT16...40F_C	414...425	400	OXP6X400	1SCA108226R1001	10	0.12
OT63...80F_C	183...194	150	OXP6X150	1SCA022295R5600	10	0.05
OT63...80F_C	203...214	170	OXP6X170	1SCA108224R1001	10	0.05
OT63...80F_C	298...309	265	OXP6X265	1SCA108225R1001	10	0.08
OT63...80F_C	433...444	400	OXP6X400	1SCA108226R1001	10	0.12
OT 100...125F_C	192...206	150	OXP6X150	1SCA022295R5600	10	0.05
OT 100...125F_C	212...226	170	OXP6X170	1SCA108224R1001	10	0.05
OT 100...125F_C	307...321	265	OXP6X265	1SCA108225R1001	10	0.08
OT 100...125F_C	442...456	400	OXP6X400	1SCA108226R1001	10	0.12
Shaft diameter 6 mm						
OT160...250_C	166...214	90	OXP6X90	1SCA022064R1180	10	0.03
OT160...250_C	209...254	130	OXP6X130	1SCA022057R0570	10	0.04
OT160...250_C	240...285	161	OXP6X161	1SCA022067R1760	10	0.05
OT160...250_C	289...334	210	OXP6X210	1SCA022295R6080	10	0.06
OT160...250_C	369...414	290	OXP6X290	1SCA022042R6370	10	0.08
OT160...250_C	439...484	360	OXP6X360	1SCA022042R6530	10	0.11

Ordering information
Accessories

OXP12X
S00047A

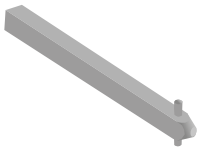

Extended shafts

Shafts for pistol type handles

Suitable for switches	Installation depth [mm]	Length [mm]	Type	Order number	Units/ type [pcs]	Weight/ unit [kg]
Shaft diameter 12 mm						
OT315...400_C	209…266	107	OXP12X107	1SCA022029R9750	1	0.12
OT315...400_C	243…307	148	OXP12X148	1SCA022658R5570	1	0.17
OT315...400_C	261…325	166	OXP12X166	1SCA022325R7100	1	0.20
OT315...400_C	280…344	185	OXP12X185	1SCA022325R6710	1	0.22
OT315...400_C	345…409	250	OXP12X250	1SCA022325R6980	1	0.29
OT315...400_C	375…439	280	OXP12X280	1SCA022137R5140	1	0.33
OT315...400_C	420…484	325	OXP12X325	1SCA022042R5810	1	0.38
OT315...400_C	490…554	395	OXP12X395	1SCA022042R5990	1	0.46
OT315...400_C	560…624	465	OXP12X465	1SCA022042R6020	1	0.54
OT630…800_C	287…355	148	OXP12X148	1SCA022658R5570	1	0.17
OT630…800_C	324…422	185	OXP12X185	1SCA022325R6710	1	0.22
OT630…800_C	389…487	250	OXP12X250	1SCA022325R6980	1	0.29
OT630…800_C	464…562	325	OXP12X325	1SCA022042R5810	1	0.38
OT630…800_C	534…632	395	OXP12X395	1SCA022042R5990	1	0.46
OT630…800_C	604…702	465	OXP12X465	1SCA022042R6020	1	0.54
OT1000…2500_C	339…425	166	OXP12X166	1SCA022325R7100	1	0.20
OT1000…2500_C	423…509	250	OXP12X250	1SCA022325R6980	1	0.29
OT1000…2500_C	498…584	325	OXP12X325	1SCA022042R5810	1	0.38
OT1000…2500_C	568…654	395	OXP12X395	1SCA022042R5990	1	0.46
OT1000…2500_C	638…724	465	OXP12X465	1SCA022042R6020	1	0.54

Ordering information
Accessories

OA1G01
OA7G10
S00261A



OA1G10
OA8G01
OA3G10
S00261A



OA2G11
S01025A

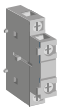

Auxiliary contacts

The type and ordering numbers are for one piece.
See the contact functions, pages 84 - 85.

Auxiliary contact blocks for OT16...125F and OTM40...125F

Snap-on mounting to the switch, IP 20, max. 2 blocks/ side. I_{th} = 16 A, suitable for cable cross sections max. 2 x 2,5 mm^2. Simultaneous action with the main contacts.

Suitable for switches	Contact functions	Installation side	Type	Order number	Delivery batch [pcs]	Weight/ unit [kg]
OT_16...125F_C	1NO	Right	OA1G10	1SCA022353R4970	10	0.03
OT_16...125F_C	1NC	Right	OA8G01	1SCA022744R2240	10	0.03
OT_16...125F_C	1NO	Left	OA7G10	1SCA022673R1140	10	0.03
OT_16...125F_C	1NC	Left	OA1G01	1SCA022353R4890	10	0.03
OT63...125F3C	1NO+1NC	Either	OA2G11[1)]	1SCA022379R8100	10	0.03
OTM40...125F3C	1NO+1NC	Either	OA2G11[1)]	1SCA022379R8100	10	0.03

[1)] Not mountable on 4-pole change-over switches

Auxiliary contact blocks for OT160...2500 and OTM160...2500

Mounting on the right side of the switch: Max. 4 auxiliary contact blocks/switch (totally 8 blocks). Types _AU have gold plated contacts for harsh environments and low operating voltages. Simultaneous action with the main contacts, IP20.

Suitable for switches	Contact functions	Installation side	Type	Order number	Delivery batch [pcs]	Weight/ unit [kg]
OT_160...2500_C_	1NO	Right	OA1G10	1SCA022353R4970	10	0.03
OT_160...2500_C_	1NC	Right	OA3G01	1SCA022456R7410	10	0.03
OT_160...2500_C_	1NO	Right	OA1G10AU	1SCA022436R7910	10	0.03
OT_160...2500_C_	1NC	Right	OA3G01AU	1SCA022819R5260	10	0.03

Function tables

Function table of OT160...2500 and OTM160...2500 auxiliary contacts / Switch I (max. 2+2)

Handle position	Main contacts	OA1G10 NO	OA3G01 NC
I	closed	closed	open
0	open	open	closed
II	closed	open	closed

Function table of OT160...2500 and OTM160...2500 auxiliary contacts / Switch II (max. 2+2)

Handle position	Main contacts	OA1G10 NO	OA3G01 NC
I	closed	open	closed
0	open	open	closed
II	closed	closed	open

Ordering information
Accessories

OTPS40F_
S00262A



OTPS80F_
S00263A



OTPS60F_
OTPS125F_
S01342A



Fourth poles

Fourth poles for OT16...125F

Snap-on mounting to the left or right side of the switches, IP20. Simultaneous operation with power poles. The type and ordering numbers are for one piece.

Suitable for switches	Rated current, up to 415V AC-21A/AC-22A/AC-23A I[A]	Type	Order number	Delivery batch [pcs]	Weight/ unit [kg]
OT16…40F_C	40/40/23	OTPS40FPN1[1)]	1SCA105001R1001	10	0.03
OT16…40F_C	40/40/23	OTPS40FPN2[2)]	1SCA105000R1001	10	0.03
OT63…80F_C	80/80/75	OTPS80FP	1SCA105461R1001	10	0.06
OT100...125F_C	125/125/90	OTPS125FP	1SCA105099R1001	10	0.14

Fourth poles for OTM40...125F

Snap-on mounting to the left or right side of the switches, IP20. Simultaneous operation with power poles. The type and ordering number is for one piece.

Suitable for switches	Rated current, up to 415V AC-21A/AC-22A/AC-23A I[A]	Type	Order number	Delivery batch [pcs]	Weight/ unit [kg]
OTM40F_	40/40/40	OTPS60FP	1SCA111009R1001	1	0.14
OTM63...125F_	125/125/90	OTPS125FP	1SCA105099R1001	1	0.14

[1)] Installation to the left side
[2)] Installation to the right side

Ordering information
Accessories

OTS_T3
S00265A

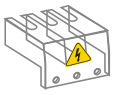

OTS_T1
S00462A



OTS_L_
S01638A



OTS_S_
S01637A

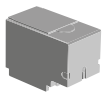

Terminal shrouds

Terminal shrouds, transparent plastic

Snap-on mounting to the switches, IP20. The full shrouding of a 3-pole change-over switch is achieved with four 3-pole shrouds. The type and ordering numbers are for one piece.

Suitable for switches	Type	Order number	Delivery batch [pcs]	Weight/ unit [kg]
For three pole switches				
OT16…40F_C	OTS40T3	1SCA105317R1001	10	0.01
OT63…80F_C	OTS63T3	1SCA022353R6750	10	0.01
OT100...125F_C, OTM 40...125F_	OTS125T3	1SCA022379R9680	10	0.01
For fourth pole				
OTPS40FPN1	OTS40T1	1SCA105314R1001	10	0.01
OTPS40FPN2	OTS40T1	1SCA105314R1001	10	0.01
OTPS80FP	OTS63T1	1SCA022353R6910	10	0.01
OTPS60FP, OTPS125FP	OTS125T1	1SCA022379R9760	10	0.01

Terminal shrouds, grey plastic

Snap-on mounting to the switches, IP 20. A kit includes three or four shrouds which can be used on either side of the switch. Suitable for the upperswitch. Transparent shrouds for OT_160…2500 available on request, please replace the letter “G” with “T”.

Suitable for switches	No. of poles	Description	Type	Order number	Units/ type [pcs]	Weight/ unit [kg]
OT_160…250_C	3	Long type	OTS250G1L/3	1SCA022731R8150	3	0.09
OT_160…250_C	3	Short type	OTS250G1S/3	1SCA022731R8310	3	0.06
OT_160…250_C	4	Long type	OTS250G1L/4	1SCA022731R8230	4	0.12
OT_160…250_C	4	Short type	OTS250G1S/4	1SCA022731R8400	4	0.08
OT_315…400_C	3	Long type	OTS400G1L/3	1SCA022736R8840	3	0.15
OT_315…400_C	3	Short type	OTS400G1S/3	1SCA022736R9060	3	0.09
OT_315…400_C	4	Long type	OTS400G1L/4	1SCA022736R9490	4	0.20
OT_315…400_C	4	Short type	OTS400G1S/4	1SCA022736R9650	4	0.12
OT_600…800_C	3	Long type	OTS800G1L/3	1SCA022776R7890	3	0.32
OT_600…800_C	3	Short type	OTS800G1S/3	1SCA022776R8190	3	0.17
OT_600…800_C	4	Long type	OTS800G1L/4	1SCA022776R7970	4	0.42
OT_600…800_C	4	Short type	OTS800G1S/4	1SCA022776R8270	4	0.26
OT_1000…1600_C	3	Long type	OTS1600G1L/3	1SCA022871R9510	3	0.64
OT_1000…1600_C	3	Short type	OTS1600G1S/3	1SCA022871R9600	3	0.37
OT_1000…1600_C	4	Long type	OTS1600G1L/4	1SCA022871R9780	4	0.85
OT_1000…1600_C	4	Short type	OTS1600G1S/4	1SCA022871R9860	4	0.49
OT_2000…2500_C	3	Long type	OTS2500G1L/3	1SCA107261R1001	3	0.77
OT_2000…2500_C	3	Short type	OTS2500G1S/3	1SCA107260R1001	3	0.47
OT_2000…2500_C	4	Long type	OTS2500G1L/4	1SCA107262R1001	4	1.00
OT_2000…2500_C	4	Short type	OTS2500G1S/4	1SCA107271R1001	4	0.61

Ordering information
Accessories

OZXB2K
1. S00215A, 2. S00216A

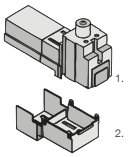

OZXB3K
1. S00218A, 2. S00219A, 3. S00217A, 4. S00220A

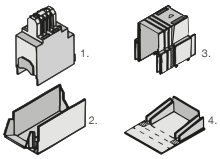

OZXB4K
1. S00221A, 2. S00222A

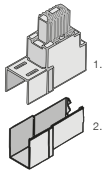

OZXB5K
1. S00223A, 2. S00224A

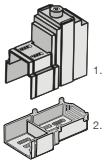

OTB_
KE00052A

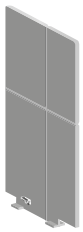

PB_



Terminal shrouds for terminal clamps

Snap-on mounting to the terminal clamps, transparent plastic, IP 2X

Suitable for switches	No. of poles	Type	Order number	Units/ type [pcs]	Weight/ unit [kg]
OZXB2, 2L	3	OZXB2K	1SCA022264R0010	3	0.05
OZXB3, 4	3	OZXB3K	1SCA022264R0440	3	0.20
OZXB5, 6	3	OZXB4K	1SCA022199R2850	3	0.24
OZXB7, 7L	3	OZXB5K	1SCA022283R8040	3	0.13

Phase separators

Grey plastic plate for maintaining clearance between the phases without terminal shrouds. Snap-on mounting. The package includes 12 plates and 6 filling plates.

Suitable for switches	Type	Order number	Units/ type [pcs]	Weight/ unit [kg]
OT600U, OT630...800E, 3- and 4-pole	OTB800/6C	1SCA107272R1001	12	0.55
OT800U, OT1000…2500, 3- and 4-pole	OTB1600/6C	1SCA104661R1001	12	0.74

Phase barriers

The phase barriers designed for ABB Tmax T4-T5 MCCB's can also be used for OT_160...800 change-over switches. 3-pole change-overs need 8 barriers and 4-pole change-overs need 12 barriers for full protection.

Suitable for switches	No. of poles	Height h [mm]	Cutting width W of the phase barrier [mm]	Type	Order number	Units/ type [pcs]	Weight/ unit [kg]
OT_160…250E_C	3	100	55	PB100 low	1SDA054970R1	4	
OT_160…250E_C	3	200	55	PB200 high	1SDA054972R1	4	
OT_160…250E_C	4	100	55	PB100 low	1SDA054971R1	6	
OT_160…250E_C	4	200	55	PB200 high	1SDA054973R1	6	
OT_315…400E_C	3	100	67	PB100 low	1SDA054970R1	4	
OT_315…400E_C	3	200	67	PB200 high	1SDA054972R1	4	
OT_315…400E_C	4	100	67	PB100 low	1SDA054971R1	6	
OT_315…400E_C	4	200	67	PB200 high	1SDA054973R1	6	
OT_600...800E_C	3	100	90	PB100 low	1SDA054970R1	4	
OT_600...800E_C	3	200	90	PB200 high	1SDA054972R1	4	
OT_600...800E_C	4	100	90	PB100 low	1SDA054971R1	6	
OT_600...800E_C	4	200	90	PB200 high	1SDA054973R1	6	

Ordering information
Accessories

OZXT1
S00738A



OZXT2...3
S01349A



OZXT6
S07190



OZXL1
S01361A



OZXB1L
S00177A



OZXB2
S00179A

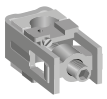

OZXB2L, 7L
S00182A

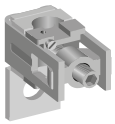

OZXB8, 9
S01806A



OZXB3, 5
S00186A

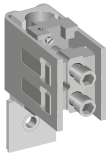

Terminal clamps

Suitable for switches	Cable cross section [mm²]	Type	Order number	Units/ type [pcs]	Weight/ unit [kg]
Terminal clamp sets for Al- and Cu-cables insulated versions					
OT63…125F_	16…50 Al/2.5…50 Cu	OZXT1	1SCA022469R6310	3	0.06
OT100…125F_	16…120 Al/Cu	OZXT2	1SCA022620R7200	3	0.21
OT100…125F_	2x(16…50) Al/Cu	OZXT3	1SCA022639R0720	3	0.21
OTM40…125F_	16…50 Al/2.5…50 Cu	OZXT1	1SCA022469R6310	3	0.06
OTM63…125F_	16…120 Al/Cu	OZXT2	1SCA022620R7200	3	0.21
OTM63…125F_	2x(16…50) Al/Cu	OZXT3	1SCA022639R0720	3	0.21
Including 0.75...2.5 mm² voltage sensing connection. Voltage sensing wires are not included					
OTM40…125F	16…50 Al/2.5…50 Cu	OZXT6	1SCA122537R1001	3	0.06

Terminal clamp sets for Al- and Cu-cables

Suitable for switches	Suitable shroud	Cable cross section [mm²]	Type	Order number	Units/ type [pcs]	Delivery batch [pcs]	Weight/ unit [kg]
OT100…125F_		10…70	OZXL1	1SCA022439R6770	3	1	0.14
OTM40…125F_		10…70	OZXL1	1SCA022439R6770	3	1	0.14
OT_160…250E_C	OTS250_L	10…70	OZXB1L	1SCA022169R2030	3	1	0.15
OT_160…250E_C	OTS250_L	10…70	OZXB1L/1	1SCA022194R0030	1	50	0.05
OT_160…250E_C	OZXB2K	25…120	OZXB2	1SCA022119R7610	3	1	0.34
OT_160…250E_C	OZXB2K	25…120	OZXB2/1	1SCA022194R0200	1	50	0.12
OT_160…250E_C	OZXB2K	25…120	OZXB2L	1SCA022158R7750	3	1	0.43
OT_160…250E_C	OZXB2K	25…120	OZXB2L/1	1SCA022194R0460	1	50	0.15
OT_160…250E_C	OTS250_L	95…185	OZXB8	1SCA022744R1510	3	1	0.50
OT_160…250E_C	OTS250_L	95…185	OZXB8/1	1SCA022744R1600	1	20	0.15
OT_160…250E_C	OTS250_L	95…240	OZXB9	1SCA022750R3210	3	1	0.50
OT_160…250E_C	OTS250_L	95…240	OZXB9/1	1SCA022750R3300	1	20	0.15
OT_315…400E_C	OZXB2K	25…120	OZXB2L	1SCA022158R7750	3	1	0.43
OT_315…400E_C	OZXB2K	25…120	OZXB2L/1	1SCA022194R0460	1	50	0.15
OT_315…400E_C	OZXB3K	95…185	OZXB3	1SCA022136R8100	3	1	1.28
OT_315…400E_C	OZXB3K	95…185	OZXB3/1	1SCA022194R0620	1	20	0.43
OT_315…400E_C	OZXB3K	2x(95…185)	OZXB4	1SCA022137R4760	3	1	1.71
OT_315…400E_C	OZXB3K	2x(95…185)	OZXB4/1	1SCA022194R0890	1	20	0.57
OT_315…400E_C	OZXB5K	120…240	OZXB7	1SCA022185R0040	3	1	1.00
OT_315…400E_C	OZXB5K	120…240	OZXB7/1	1SCA022194R1430	1	20	0.34
OT_315…400E_C	OZXB5K	120…240	OZXB7L	1SCA022185R7130	3	1	1.17
OT_315…400E_C	OZXB5K	120…240	OZXB7L/1	1SCA022194R1600	1	20	0.40
OT_315…400E_C	OTS400_L	95…185	OZXB8	1SCA022744R1510	3	1	0.50
OT_315…400E_C	OTS400_L	95…185	OZXB8/1	1SCA022744R1600	1	20	0.15
OT_315…400E_C	OTS400_L	95…240	OZXB9	1SCA022750R3210	3	1	0.50
OT_315…400E_C	OTS400_L	95…240	OZXB9/1	1SCA022750R3300	1	20	0.15

Ordering information
Accessories

OZXB2L, 7L
S00182A

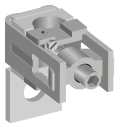

OZXB3, 5
S00186A

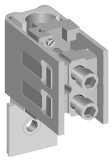

OZXB4, 6
S00188A

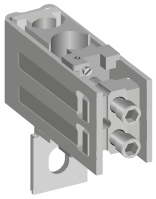

Terminal clamps

Suitable for switches	Cable cross section [mm²]	Suitable shroud	Type	Order number	Units/ type [pcs]	Delivery batch [pcs]	Weight/ unit [kg]
Terminal clamp sets for Al- and Cu-cables							
OT_630…800E_C	120…300	OZXB4K	OZXB5	1SCA022137R2470	3	1	2.28
OT_630…800E_C	120…300	OZXB4K	OZXB5/1	1SCA022194R1010	1	20	0.76
OT_630…800E_C	2x(120…300)	OZXB4K	OZXB6	1SCA022137R4920	3	1	3.12
OT_630…800E_C	2x(120…300)	OZXB4K	OZXB6/1	1SCA022194R1270	1	20	1.04
OT_1000…1600E_C	95…185	OTS1600_L	OZXB3	1SCA022136R8100	3	1	1.28
OT_1000…1600E_C	95…185	OTS1600_L	OZXB3/1	1SCA022194R0620	1	20	0.13
OT_1000…1600E_C	2x(95…185)	OTS1600_L	OZXB4	1SCA022137R4760	3	1	1.71
OT_1000…1600E_C	2x(95…185)	OTS1600_L	OZXB4/1	1SCA022194R0890	1	20	0.60
OT_1000…1600E_C	120…300	OTS1600_L	OZXB5	1SCA022137R2470	3	1	2.22
OT_1000…1600E_C	120…300	OTS1600_L	OZXB5/1	1SCA022194R1010	1	20	0.80
OT_1000…1600E_C	2x(120…300)	OTS1600_L	OZXB6	1SCA022137R4920	3	1	3.03
OT_1000…1600E_C	2x(120…300)	OTS1600_L	OZXB6/1	1SCA022194R1270	1	20	1.00
OT_1000…1600E_C	120…240	OTS1600_L	OZXB7L	1SCA022185R7130	3	1	1.20
OT_1000…1600E_C	120…240	OTS1600_L	OZXB7L/1	1SCA022194R1600	1	20	0.39
OT_2000…2500E_C	95…185	OTS2500_L	OZXB3	1SCA022136R8100	3	1	1.28
OT_2000…2500E_C	95…185	OTS2500_L	OZXB3/1	1SCA022194R0620	1	20	0.13
OT_2000…2500E_C	2x(95…185)	OTS2500_L	OZXB4	1SCA022137R4760	3	1	1.71
OT_2000…2500E_C	2x(95…185)	OTS2500_L	OZXB4/1	1SCA022194R0890	1	20	0.60
OT_2000…2500E_C	120…300	OTS2500_L	OZXB5	1SCA022137R2470	3	1	2.22
OT_2000…2500E_C	120…300	OTS2500_L	OZXB5/1	1SCA022194R1010	1	20	0.80
OT_2000…2500E_C	2x(120…300)	OTS2500_L	OZXB6	1SCA022137R4920	3	1	3.03
OT_2000…2500E_C	2x(120…300)	OTS2500_L	OZXB6/1	1SCA022194R1270	1	20	1.00
OT_2000…2500E_C	120…240	OTS2500_L	OZXB7L	1SCA022185R7130	3	1	1.20
OT_2000…2500E_C	120…240	OTS2500_L	OZXB7L/1	1SCA022194R1600	1	20	0.39

Ordering information
Accessories

OWC6D_
S01282A

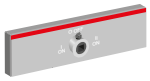

OESAZW1
S01234A

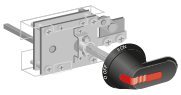

OTZW25, OETLZW11
OETLZW12
1. S00054B, 2. S00055A

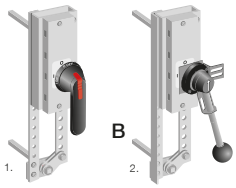

OTZW17
S01245A

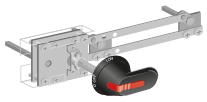

OTZW26, OETLZW13
1. S00058B, 2. S00056A

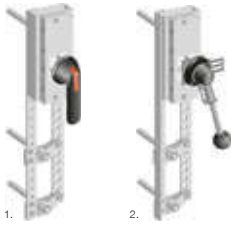

Conversion kits

Change-over kits

Suitable for switches	For shafts/ Shafts distance [mm]	Type	Order number	Units/ type [pcs]	Weight/ unit [kg]
The modular change-over switches can be built by adding a compact snap-on kit on the top of two switch-disconnectors. The kits do not require any additional foot print area, only the height is increased 12 mm.					
OT16…40	OXS6_, OXP6_	OWC6D40	1SCA022865R4550	1	0.03
OT63…80	OXS6_, OXP6_	OWC6D80	1SCA022865R4630	1	0.07
OT100…125	OXS6_, OXP6_	OWC6D125	1SCA104494R1001	1	0.09
Two standard switch-disconnectors can be connected with a mechanism operating into I-O-II positions. Two 3 or 4-pole switches are needed.					
OT16…125	90+(0…10)x15	OESAZW1	1SCA022064R3710	1	0.78
OT160…250	210+(0…18)x20	OTZW25	1SCA022778R6920	1	2.8
OT315…400	210+(0…11)x20	OETLZW11	1SCA022078R0030	1	3.0
OT630…800E_	210+(0…20)x20	OETLZW12	1SCA022078R0200	1	4.6

By-pass kits

Suitable for switches	Shafts distance [mm]	Type	Order number	Units/ type [pcs]	Weight/ unit [kg]
A combination of two switches in parallel with a third switch for change-over operation to by-pass, for example, a breaker for maintenance. The by-pass attachment can be used together with another combination attachment. Three 3 or 4-pole switches needed.					
OT16…125	Between 1 and 2:	OTZW17	1SCA022387R1620	1	0.88
	90+(0…6)x15				
	Between 1 and 3:				
	90+(0…10)x15				
OT160…250	Between 1 and 2:	OTZW26	1SCA022778R7060	1	3.3
	210+(0…9)x20				
	Between 1 and 3:				
	250+(0…9)x20				
OT315…800E_	Between 1 and 2:	OETLZW13	1SCA022078R0460	1	4.0
	210+(0…18)x20				
	Between 1 and 3:				
	250+(0…18)x20				

Ordering information
Accessories

Change-over and by-pass switches
S01233A

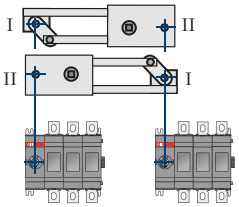

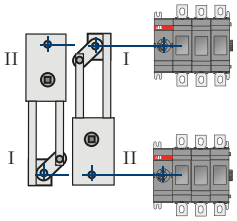

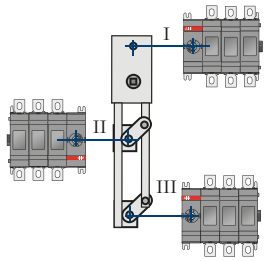

Conversion kits

Shafts and handles for conversion kits

	Included in conversion kit delivery	
Conversion kit type	**Shaft**	**Handle**
OESAZW1	x (2 pcs)	OHB80J6E011
OTZW25	x (2 pcs)	OHB95J12E011
OETLZW11	x (2 pcs)	OHB145J12E011
OETLZW12	x (2 pcs)	YASDA21 (metallic)
OTZW17	x (3 pcs)	OHB80J6E011
OTZW26	x (3 pcs)	OHB95J12E011
OETLZW13	x (3 pcs)	YASDA 6

Change-over switches

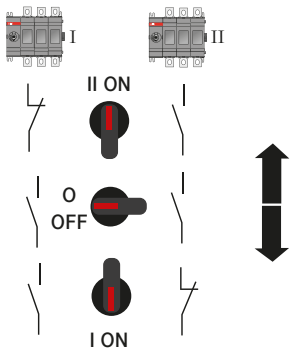

Bypass switches

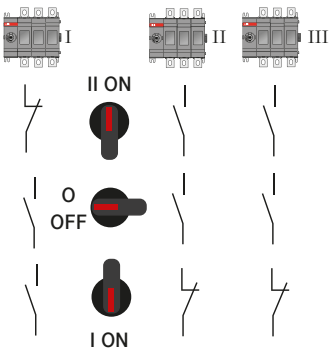

Ordering information
Accessories

OZXA32
S01469

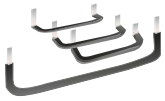

OZXA33
S01470



OZXA38
S02078



OZXA39
S02077A



OZXA40
S02079A



OZXA41
S02080A



OMZC_
S07104

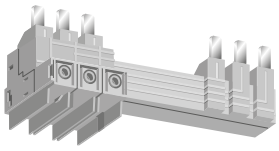

Parallel connection kits

Finger protected connection bars for parallel connection of the upper or lower terminals. The bars accept additional cables, the maximum size is stated below.

Suitable for switches	Cable cross section [mm²]	Type	Order number	Units/ type [pcs]	Weight/ unit [kg]
OT16…40F3C	6 (fine stranded), 10 (stranded)	OZXA33	1SCA022685R0310	1	0.02
OT16…40F4C	6 (fine stranded), 10 (stranded)	OZXA32	1SCA022683R4110	1	0.03
OT63…80F3C	25	OZXA38	1SCA022785R2140	1	0.06
OT63…80F4C	25	OZXA39	1SCA022790R3820	1	0.09
OT100…125F3C	50	OZXA40	1SCA022790R3910	1	0.16
OT100…125F4C	50	OZXA41	1SCA022790R4040	1	0.24
OTM40F3C_	2.5…25/2x2.5…16	OMZC003	1SCA121324R1001	1	0.5
OTM40F4C_	2.5…25/2x2.5…16	OMZC004	1SCA121325R1001	1	0.65
OTM40…125F3C_	10…70	OMZC03	1SCA117037R1001	1	0.5
OTM40…125F4C_	10…70	OMZC04	1SCA117038R1001	1	0.65

Ordering information
Accessories

OTZC13...34



OTZC43...44
OTZC53...54



OTZR_



Bridging bars

The bridging bars provide a connection link either on the incoming or outcoming side of the switch.

Suitable for switches	No. of poles	Type	Order number	Units/ type [pcs]	Weight/ unit [kg]
OT_160…250_C	3	OTZC13	1SCA022767R6910	3	0.6
OT_160…250_C	4	OTZC14	1SCA022767R7040	4	0.8
OT_315…400_C	3	OTZC23	1SCA022767R7120	3	0.6
OT_315…400_C	4	OTZC24	1SCA022767R7210	4	0.8
OT_600_C…800E_C	3	OTZC33	1SCA022785R7020	3	1.0
OT_600_C…800E_C	4	OTZC34	1SCA022785R7110	4	1.3
OT_1000…1250E_C	3	OTZC43	1SCA022868R0710	3	4.2
OT_1000…1250E_C	4	OTZC44	1SCA022868R0800	4	5.6
OT800U_, OT_1600E_C	3	OTZC53	1SCA022868R0980	3	5.6
OT800U_, OT_1600E_C	4	OTZC54	1SCA022868R1010	4	7.4
OT_2000…2500E_C	3	OTZC63	1SCA022868R1100	3	10.8
OT_2000…2500E_C	4	OTZC64	1SCA022868R1360	4	14.5

Reversing bars

A reversing switch can be built by using phase sequence bars in two phases. The kit includes two phase sequence conversion bars. The missing bridging bars must be ordered separately, see above. For example 3-pole switches: one 4-pole standard bridging bar kit is required (one bar for the reversing side, three bars for the other side).

Suitable for switches	Type	Order number	Units/ type [pcs]	Weight/ unit [kg]
OT_160…250_C	OTZR1	1SCA100352R1001	2	0.3
OT_315…400_C	OTZR2	1SCA104647R1001	2	0.3
OT_600_C…800E_C	OTZR3	1SCA100355R1001	2	0.4

Ordering information
Accessories

OMD200
S07183



OMD300
S07184



OMD800
S07185



OMZD1
S07187



OMZB18...28
S07179



OMZB38
S07180



OMZB18...28 mounted
S07181

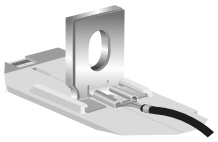

OMZB48
S07182



Automatic control units

OMD automatic control units can be used with OTM40…2500_CM_ motorized change-over switches in order to assemble an automatic transfer switch. The type and ordering codes include the OMD control unit, PCB connectors and 2 fasteners for door mounting.

If used with OTM40...125_CMA_:
1 x OTM40…125_CMA_ motorized change-over switch and 6/8 x OZXT6 terminal clamps (including voltage sensing connection) must be ordered separately to be able to assemble an automatic transfer switch.

If used with OTM160...2500_CM_:
1 x OTM160…2500_CM_ motorized change-over switch, 1 x OMZB_ voltage sensing connectors and 2 x OA1G10 auxiliary contacts must be ordered separately to be able to assemble an automatic transfer switch. The control unit can be mounted on a door or on DIN rail. Information about the control features on page 31-32. Dimension drawings on page 79.

Suitable for switches	Type	Order number	Units/ type [pcs]	Weight/ unit [kg]
OTM40…2500_CM_	OMD200E480C-A1	1SCA123789R1001	1	0.8
OTM40…2500_CM_	OMD300E480C-A1	1SCA123790R1001	1	1.0
OTM40…2500_CM_	OMD800E480C-A1	1SCA123791R1001	1	1.3

Panel fasteners

For mounting the OMD automatic control unit on the door. The type and ordering code is for 1 piece, so 2 units must be ordered for mounting the control on the door.

Suitable for OMD control unit	Type	Order number	Units/ type [pcs]	Weight/ unit [kg]
OMD200_, OMD300_, OMD800_	OMZD1	1SCA022787R5190	1	

Voltage sensing connectors*

For 0.5...1.5mm^2 voltage sensing connection of the top or bottom power poles. The connector package includes also the faston terminals (see the picture). One package includes 8 connectors and 8 faston terminals. Wires are not included.

Suitable for switches	Faston terminal cable cross section [mm^2]	Type	Order number	Units/ type [pcs]	Weight/ unit [kg]
OT_160…250_C	0.5…1.5	OMZB18	1SCA120153R1001	8	0.2
OT_315…400_C	0.5…1.5	OMZB28	1SCA120154R1001	8	0.2
OT_630…800E_C	0.5…1.5	OMZB38	1SCA120155R1001	8	0.2
OT800U, OT_1000…2500E_C	0.5…1.5	OMZB48	1SCA120156R1001	8	0.2

* Terminal clamp OZXT6 is recommended to use with OTM40...125_C for voltage sensing connection.
Terminal clamp OZXT6 includes 0.75...2.5 mm^2 voltage sensing connection. See ordering information on page 51.

Ordering information
Accessories

OMZC2
A07207



Cover plate

Providing protection against accidental contact. Padlockable transparent cover.
The type and ordering codes are for 1 piece.

Suitable for OMD control unit	Type	Order number	Units/ type [pcs]	Weight/ unit [kg]
OMD200_, OMD300_, OMD800_	OMZC2	1SCA101001R1001	1	

ODPSE230C
A07078



Connection diagram
S07186

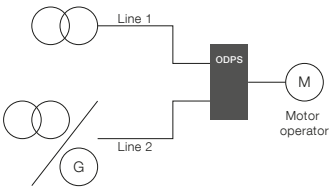

Dual power source

Provides power supply to the motor operator by using two lines. The device has two inputs, from line I (LN I) and line II (LN II), and one output for the motor operator. The motor operator is automatically energized whenever power is available in one of the lines. Can be used with 230VAC motor operators. Snap-on mounted PCB connectors are included in the delivery. The device can be DIN-rail or screw mounted. Dimension drawings on page 82.

Suitable for switches	Type	Order number	Units/ type [pcs]	Weight/ unit [kg]
OTM40…2500_	ODPSE230C	1SCA116892R1001	1	0.3

OETLZW16, 5
S00059A

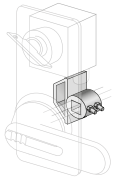

Interlocking device for locks

Cam attachment for Castell, Lowe & Fletcher or Ronis interlock. Lock, handle or shaft not included. Mounting to OXP-shaft, works together with OH-door handle and a shaft. This accessory is mounted to the operating shaft of the switch and therefore only compatible with external handles.

Suitable for switches	Type	Order number	Units/ type [pcs]	Weight/ unit [kg]
OT16…125F_C	OETLZW16	1SCA022093R2070	1	0.17
OT160…250_C	OETLZW16	1SCA022093R2070	1	0.17
OT315…2500_C	OETLZW5	1SCA022052R3900	1	0.14

Dimension drawings
Modular change-over switches

OT16...40

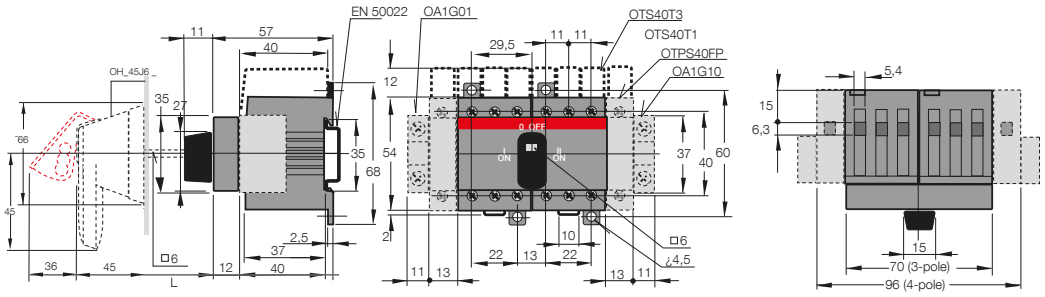

M00158/OT16-40F3_4C C

OH_45J6E311	
Shaft OXP6x	L [mm]
150	164...175
170	184...195
265	279...290
400	414...425

OT63...80

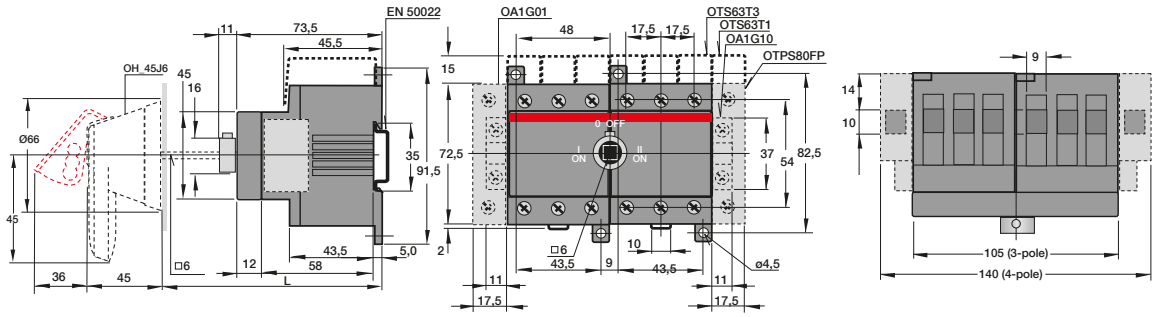

M00162/OT63-80P3C C

OH_45J6E311	
Shaft OXP6x	L [mm]
150	183...194
170	203...214
265	298...309
400	433...444

OT100...125

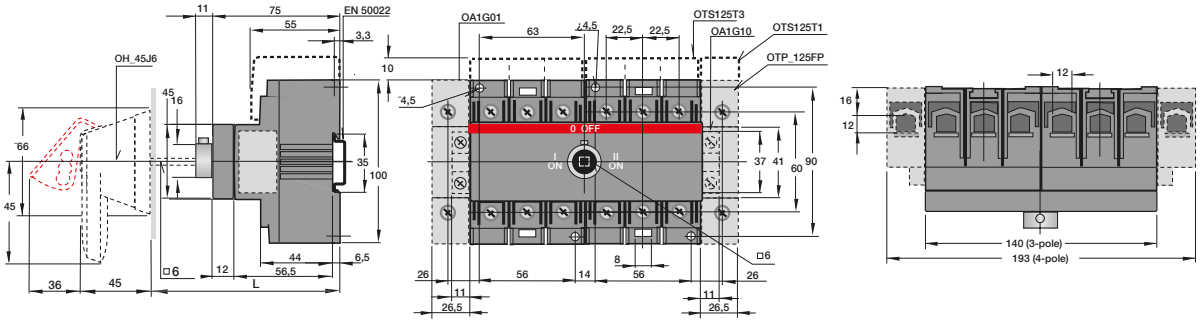

M00169/OT125F3_4C C

OH_45J6E311	
Shaft OXP6x	L [mm]
150	192...206
170	212...226
265	307...321
400	442...456

Dimension drawings
Manual change-over switches

Position indication in OT_160...2500_

OT160-2500_C

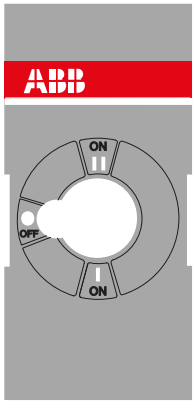

OT160-2500_CL

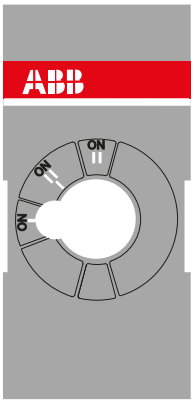

OT160-800_CF

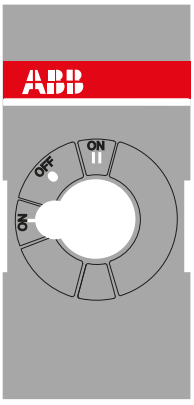

OT160...OT250E03/04C_P

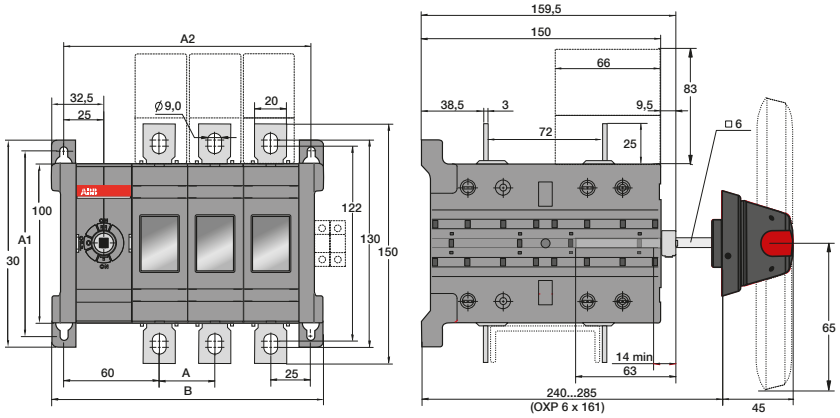

OT160-250_C_			
[mm]	E02	E03	E04
A	35	35	35
A1	116	116	116
A2	120	155	190
B	135	170	205

C000001 / OT160-250E02-04_C_ C

Dimension drawings
Manual change-over switches

OT160...OT250E12/13/33C_P

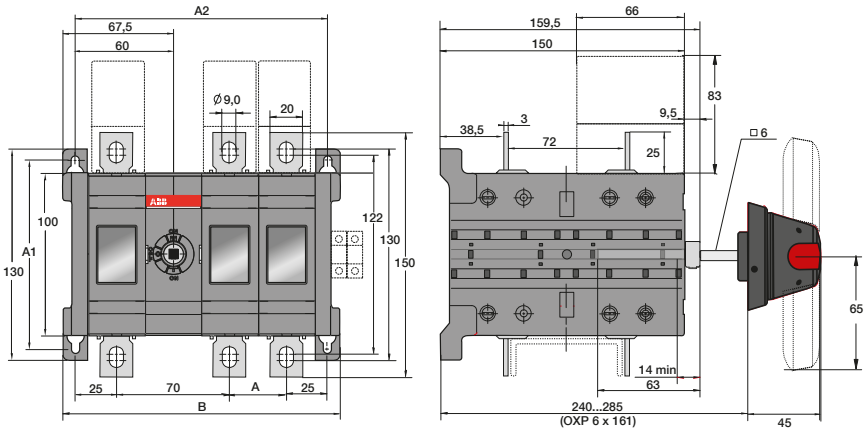

M00252/ OT160-250E12_33C C

OT160-250_C_					
[mm]	E12	E13	E22	E23	E33
A	35	35	35	35	35
A1	116	116	116	116	116
A2	155	190	190	225	260
B	170	205	205	240	275

OT160...OT250E03/04WC_P

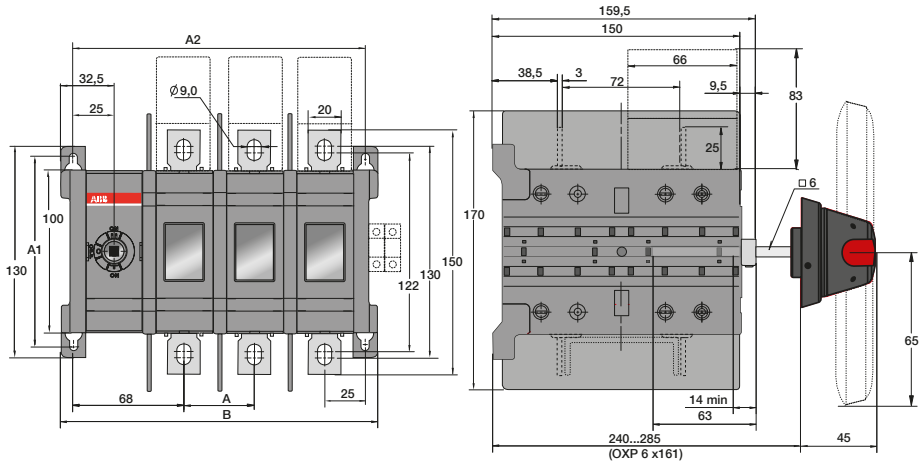

C000010 / OT160-250E_WC_ C

OT160-250_WC_			
[mm]	E02	E03	E04
A	43	43	43
A1	116	116	116
A2	136	179	222
B	151	194	237

Dimension drawings
Manual change-over switches

OT160...250E03/04_ with direct mounted handle

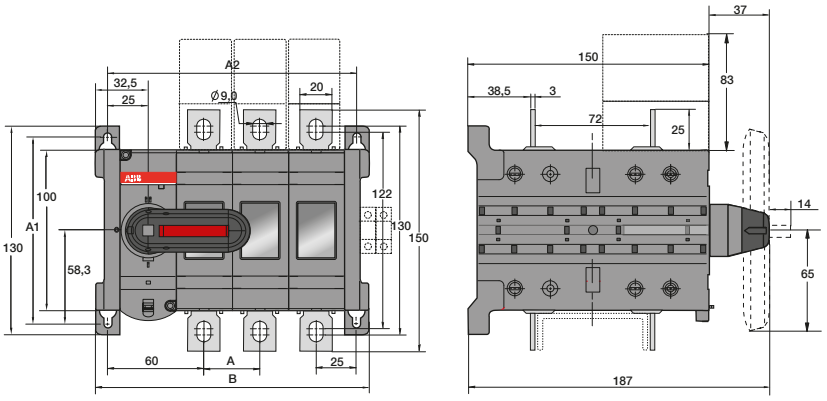

M00094 / OT160...250_CK B

OTM160-250_C

[mm]	E03	E04
A	35	35
A1	116	116
A2	156	191
B	171	206

OT315...400E03/04C_P

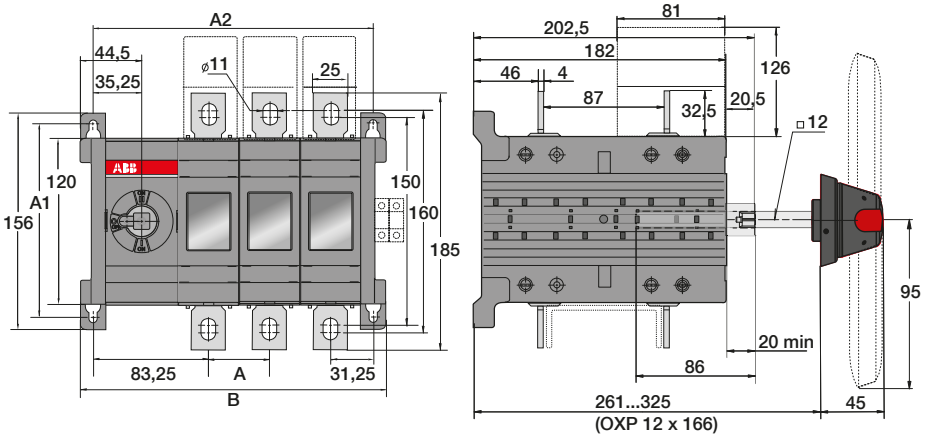

C000008 / 315-400E02-04_C_ C

OT315-400_C_

[mm]	E02	E03	E04
A	44	44	44
A1	142	142	142
A2	158,5	202,5	246,5
B	177	221	265

Dimension drawings
Manual change-over switches

OT315...OT400E12/13/33C_P

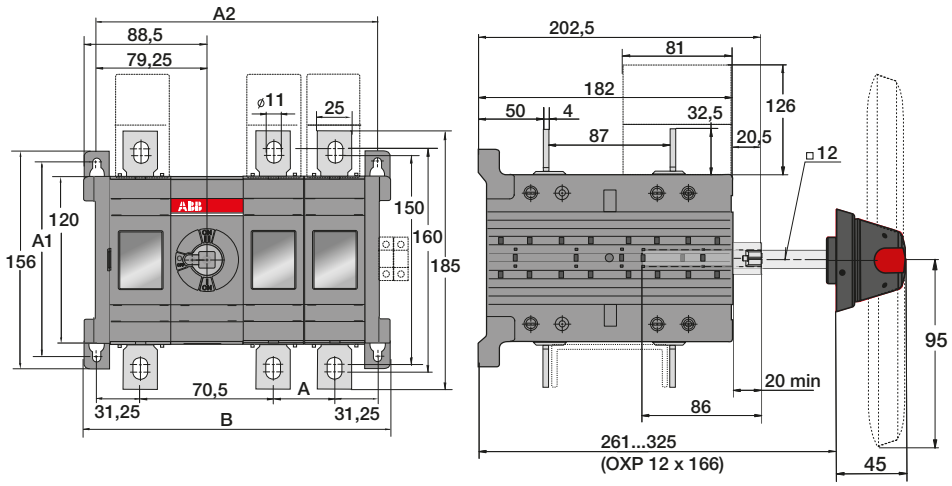

M00254 / OT315-400E12-33C_ C

OT315-400_C_					
[mm]	E12	E13	E22	E23	E33
A	44	44	44	44	44
A1	142	142	142	142	142
A2	202,5	246,5	246,5	290,5	334,5
B	221	265	265	309	253

OT315...400E03/04_ with direct mounted handle

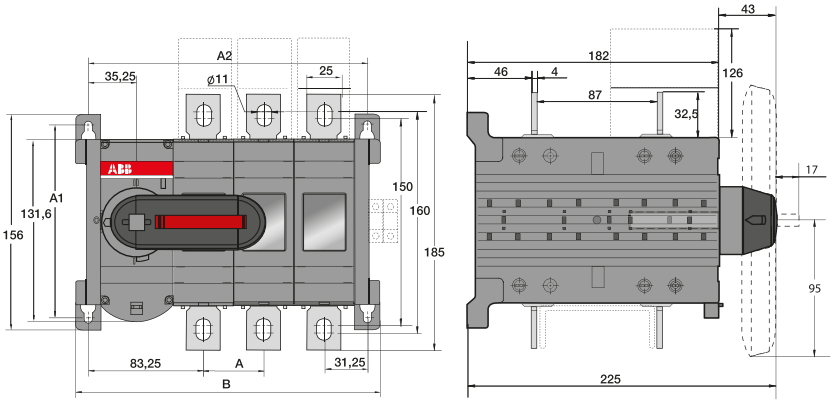

M00093/OT315/400_CK B

OT315_400_C		
[mm]	E03	E04
A	44	44
A1	142	142
A2	202,5	246,5
B	221	265

Dimension drawings
Manual change-over switches

OT630...800E03/04C_P

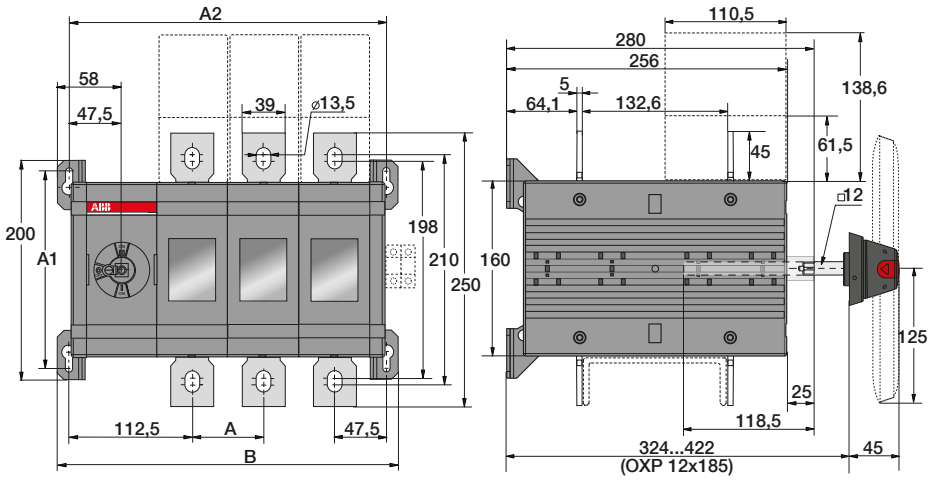

M00088/OT630-800E02-04C_ C

OT630-800_C_			
[mm]	E02	E03	E04
A	65	65	65
A1	180	180	180
A2	225	290	355
B	246	311	376

OT630...800E12/13/33C_P

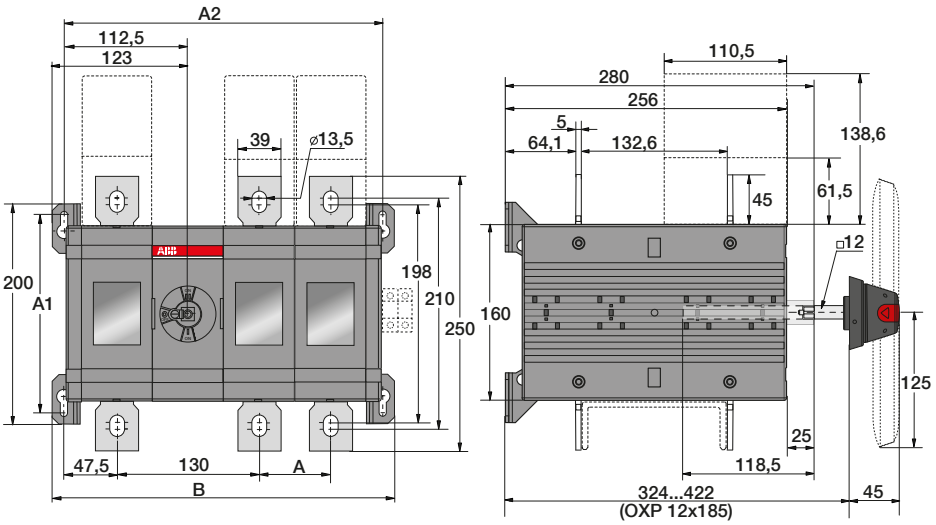

M00089/OT630-800E12-33C_ C

OT630-800_C_					
[mm]	E12	E13	E22	E23	E33
A	65	65	65	65	65
A1	180	180	180	180	180
A2	290	355	355	420	485
B	311	376	376	441	506

Dimension drawings
Manual change-over switches

OT630...800E03/04_ with direct mounted handle

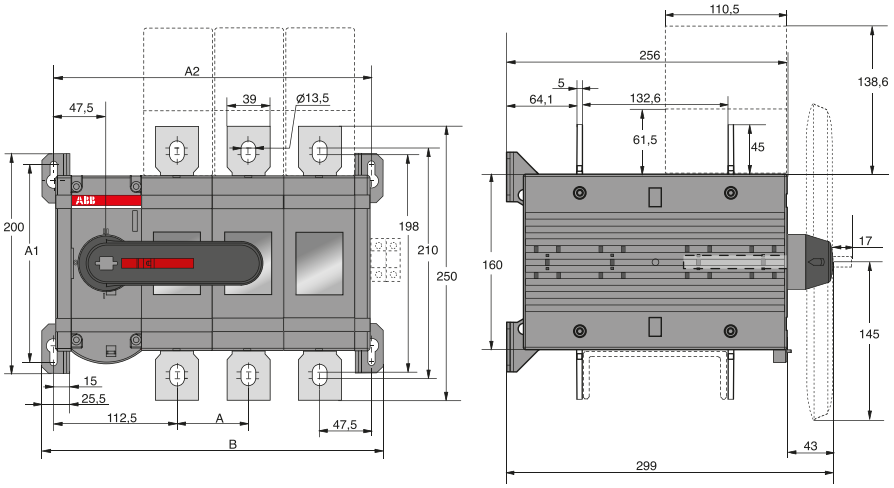

M0095/OT600...800_CK B

OT600_800_CK

[mm]	E03	E04
A	65	65
A1	180	180
A2	290	355
B	311	376

OT1000...1600E03/04CP

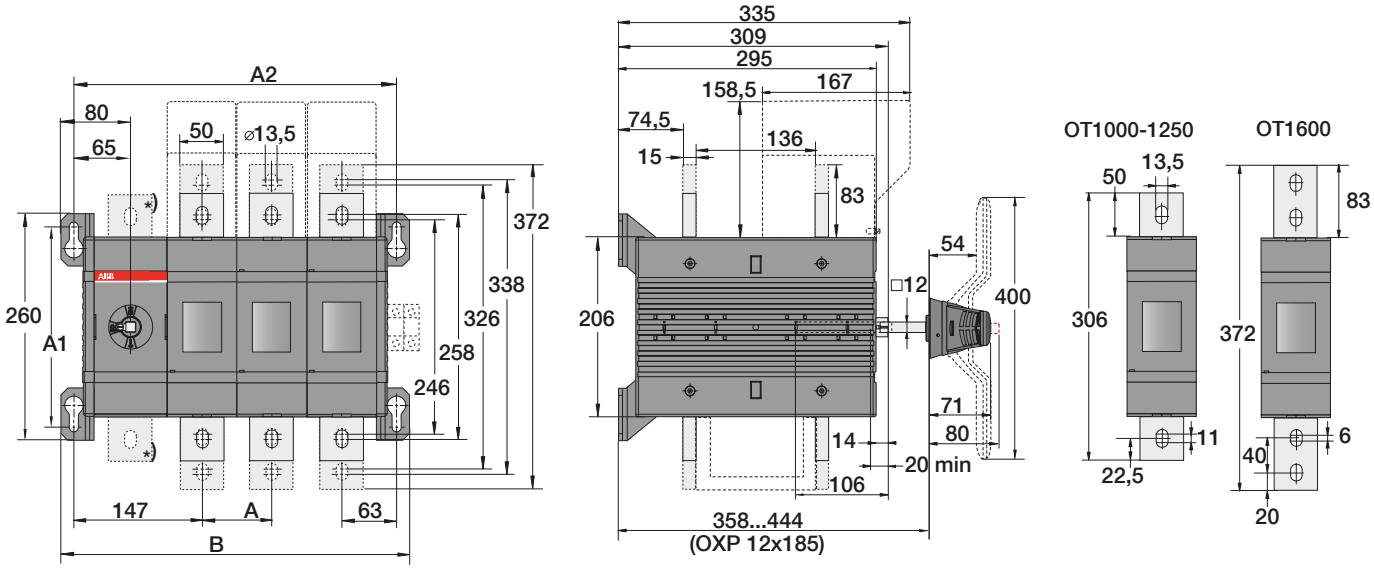

*) N3 types

M00155/OT1000-1600E_C-1 E

OT1000-1600_C_

[mm]	E02	E03	E04
A	80	80	80
A1	230	230	230
A2	290	370	450
B	320	400	480

Dimension drawings
Manual change-over switches

OT1000...1600E12/E13/E22CP

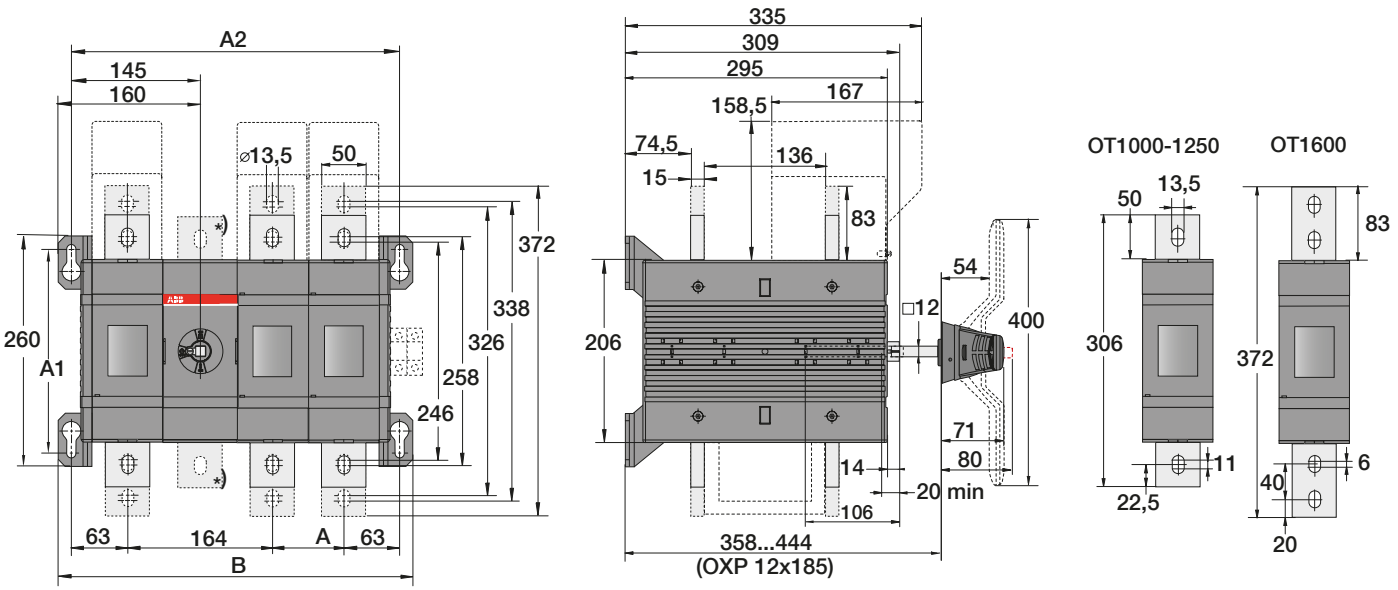

*) N3 types

M00176/OT1000-1600E12-22C-1 E

OT1000-1600_C_			
[mm]	E12	E13	E22
A	80	80	80
A1	230	230	230
A2	370	450	450
B	400	480	480

OT1000...1600E03/04 with direct mounted handle

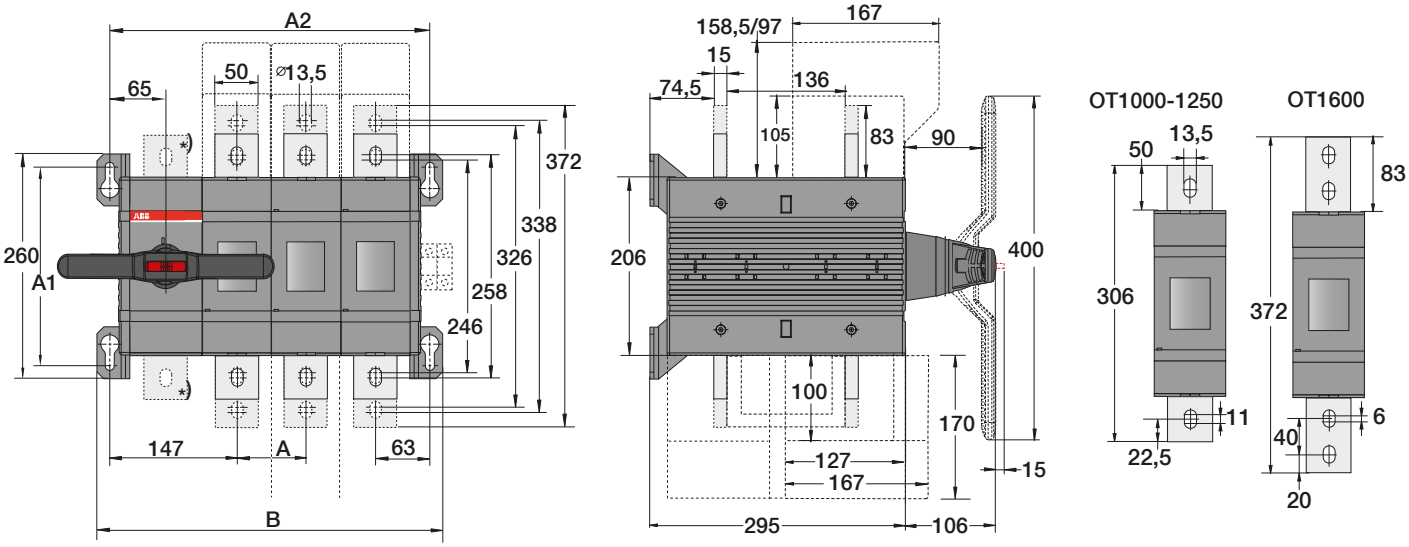

*) N3 types

M00234/OT1600E-CK-1 B

OT1000/1250/1600E_CK			
[mm]	E02	E03	E04
A	80	80	80
A1	230	230	230
A2	290	370	450
B	320	400	480

Dimension drawings
Manual change-over switches

OT2000...2500E03/04CP

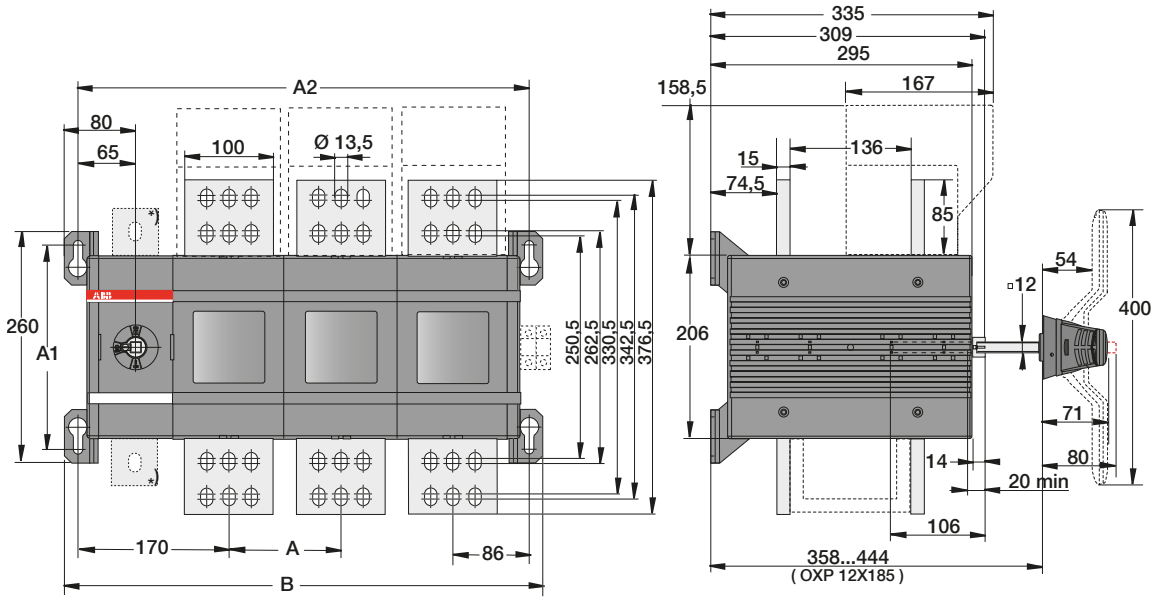

*) N3 types

M00179/ OT2000-2500E_C_ D

OT2000-2500_C_			
[mm]	E02	E03	E04
A	126	126	126
A1	230	230	230
A2	382	508	634
B	412	538	664

OT2000...2500E12/E13/E22CP

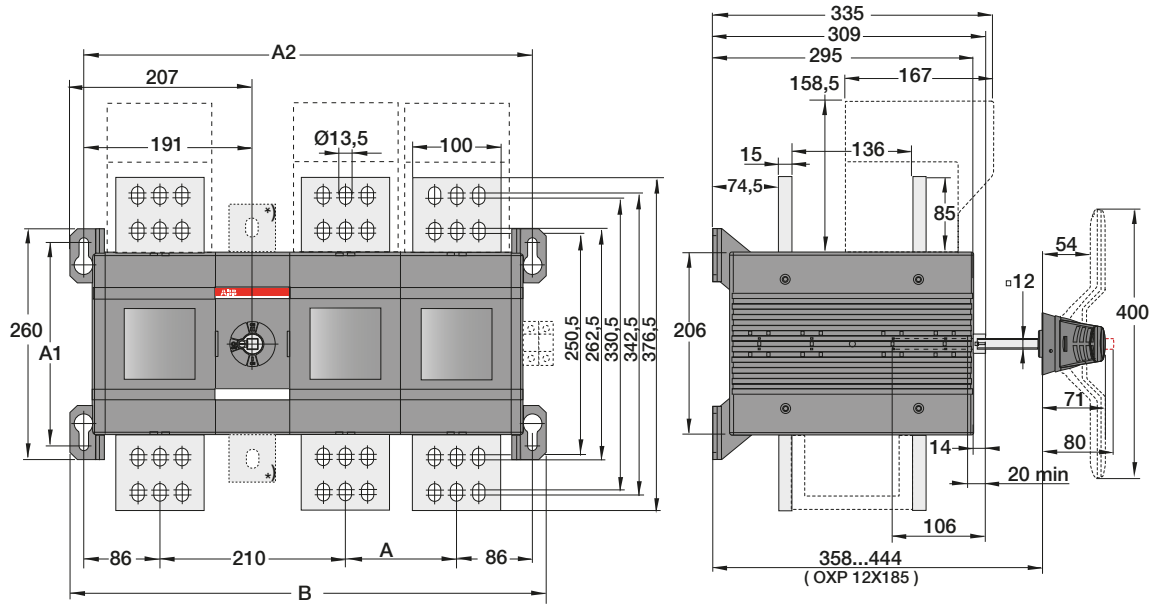

*) N3 types

M00178/ OT2000-2500E12_C_ D

OT2000-2500_C_			
[mm]	E12	E13	E22
A	126	126	126
A1	230	230	230
A2	508	634	634
B	538	664	664

Dimension drawings
Manual change-over switches

OT2000...2500E03/04_ with direct mounted handle

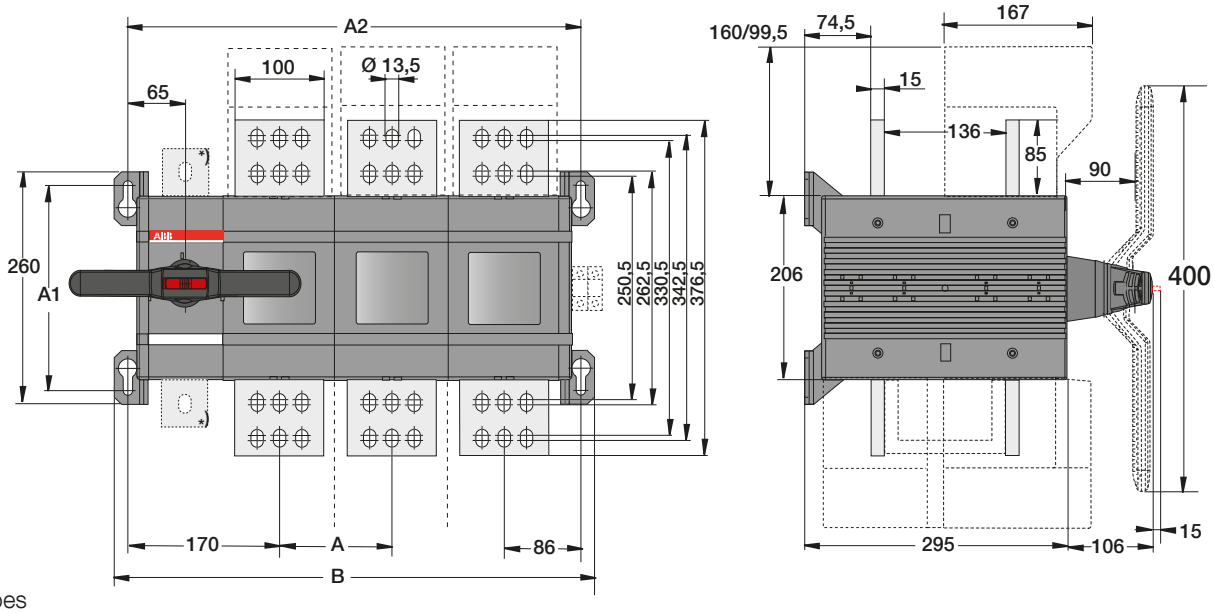

*) N3 types

M00236/ OT2500E-CK B

OT2500-CK			
[mm]	E02	E03	E04
A	126	126	126
A1	230	230	230
A2	382	508	634
B	412	538	664

Dimension drawings
Motorized change-over switches

OTM40...125F3/4_CM

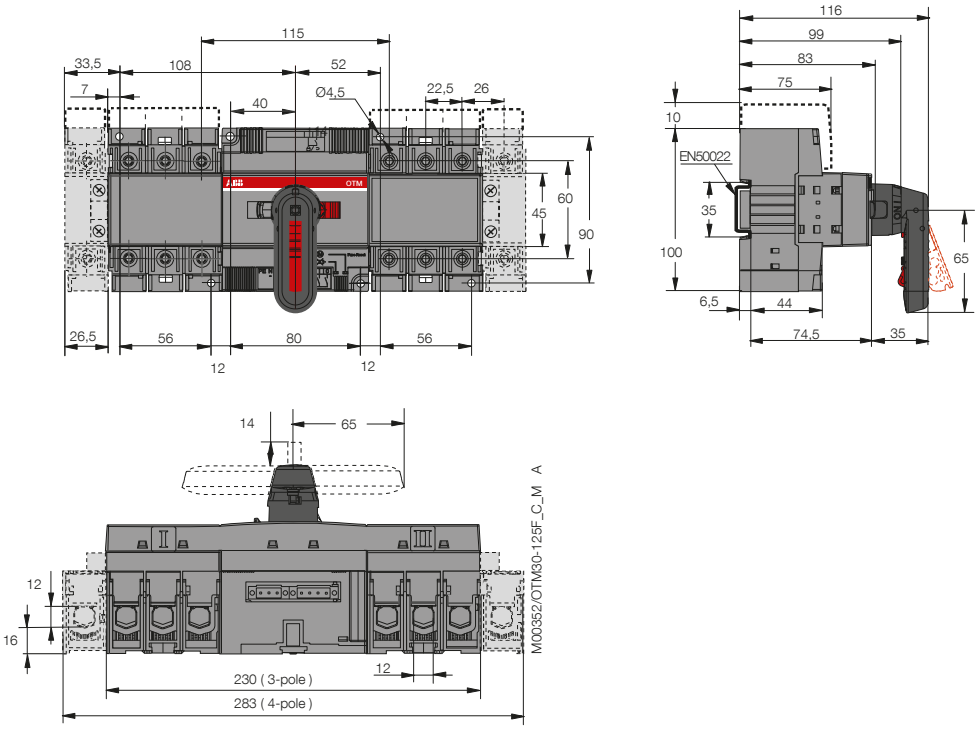

OTM160...250E2/3/4CM

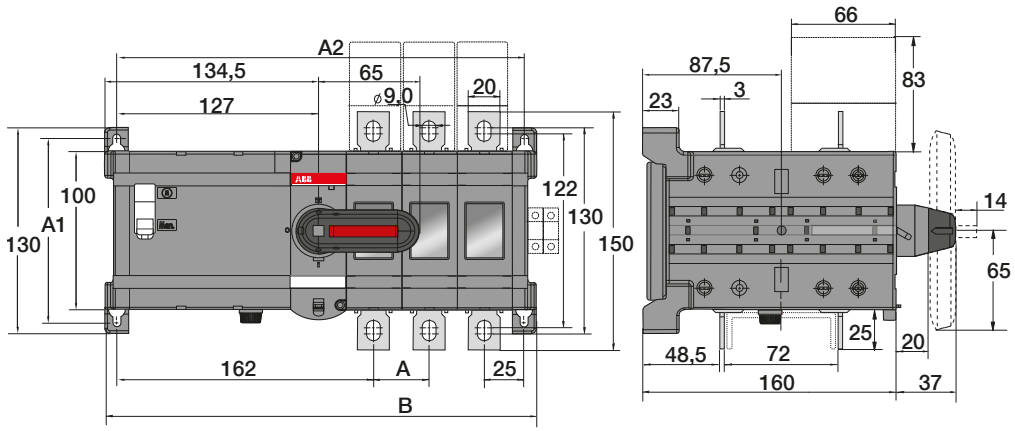

OTM160-250_C_M			
[mm]	E2	E3	E4
A	35	35	35
A1	116	116	116
A2	223	258	293
B	238	273	308

M00111 / OTM160-250E_C_M E

Dimension drawings
Motorized change-over switches

OTM160...250E2/3/4WCM

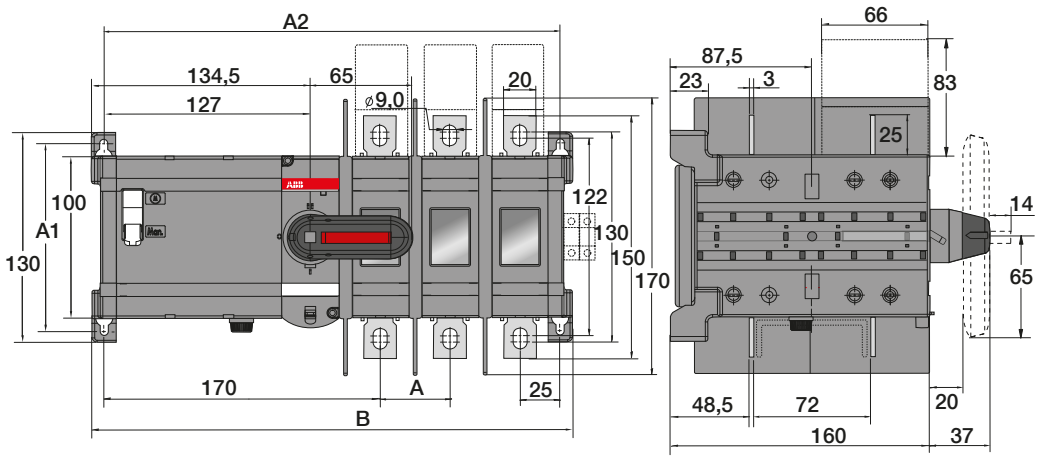

M00115 / OTM160-250E_WC_M E

OTM160-250_WCM			
[mm]	E2	E3	E4
A	43	43	43
A1	116	116	116
A2	239	282	325
B	254	297	340

OTM315...400E2/3/4CM

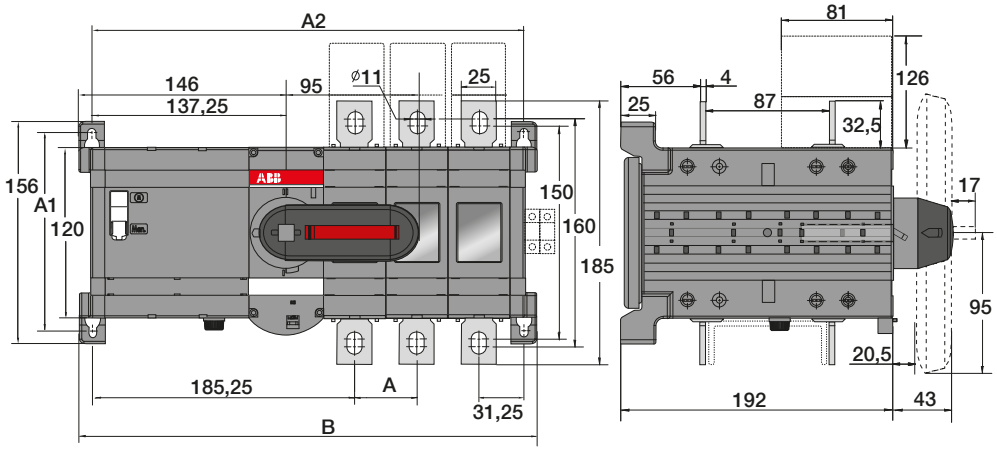

M00113 / OTM315-400E_C_M F

OTM315-400_C_M			
[mm]	E2	E3	E4
A	44	44	44
A1	142	142	142
A2	261	305	349
B	280	323	367

Dimension drawings
Motorized change-over switches

OTM630...800E2/3/4CM

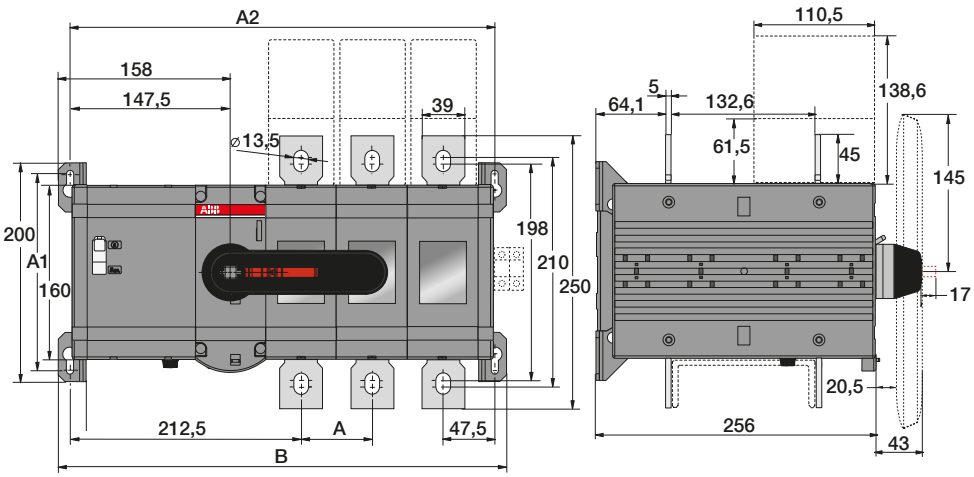

M00140/OTM630-800E02-04C_M C

OTM630-800E_C_M			
[mm]	E2	E3	E4
A	65	65	65
A1	180	180	180
A2	325	390	455
B	346	411	476

OTM1000...1250E2/3/4CM

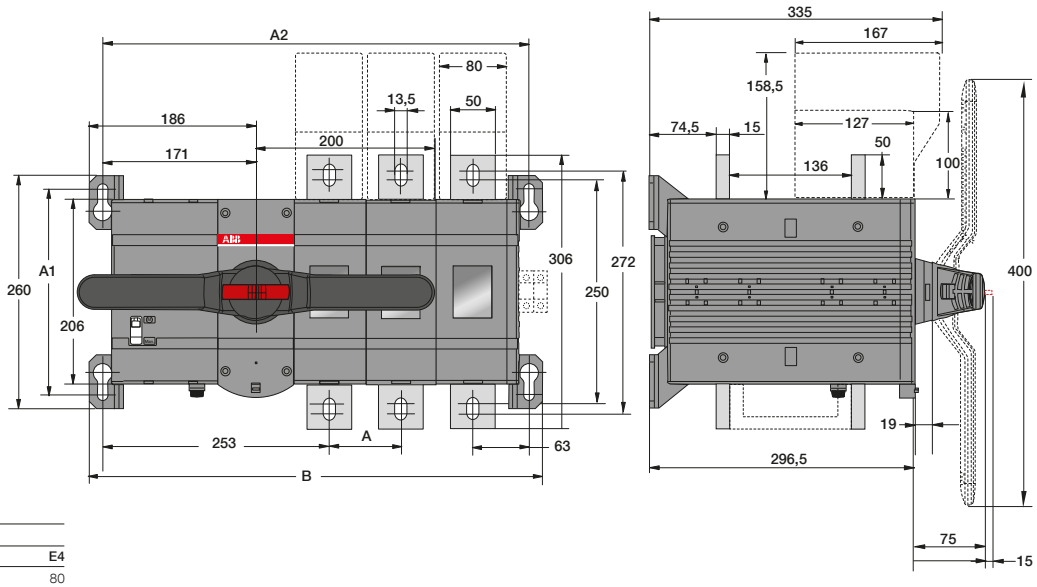

M00256/OTM1000-1250E_C_M C

OTM1000-1250_C_M			
[mm]	E2	E3	E4
A	80	80	80
A1	230	230	230
A2	296,5	476,5	556,5
B	426,5	506,5	586,5

Dimension drawings
Motorized change-over switches

OTM1600E2/3/4CM

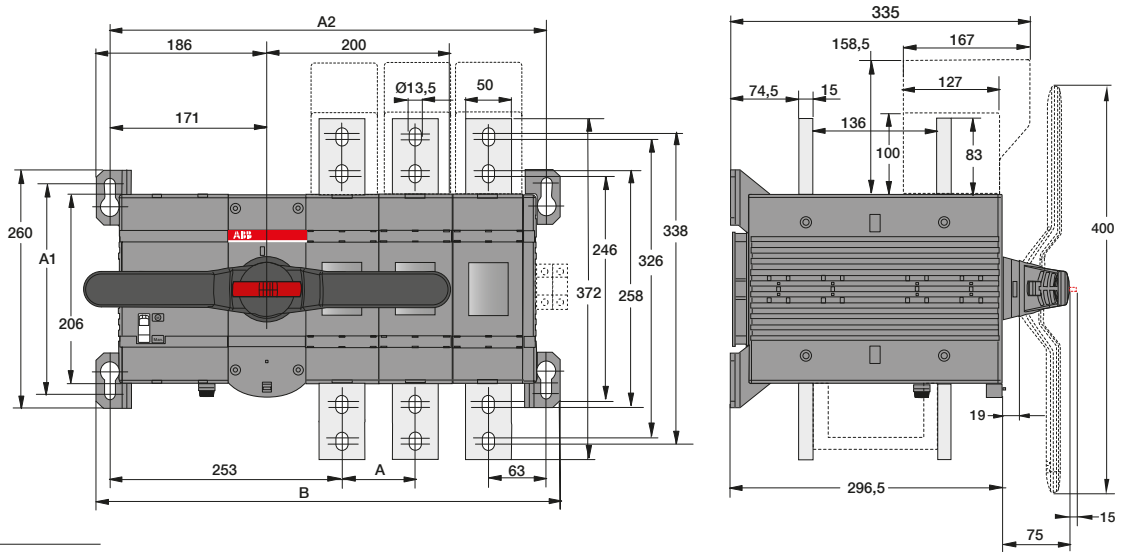

M00258/OTM1600E_C_M C

OTM1600_C_M			
[mm]	E2	E3	E4
A	80	80	80
A1	230	230	230
A2	396,6	476,5	556,5
B	426,5	506,5	586,5

OTM2000...2500E3/4CM

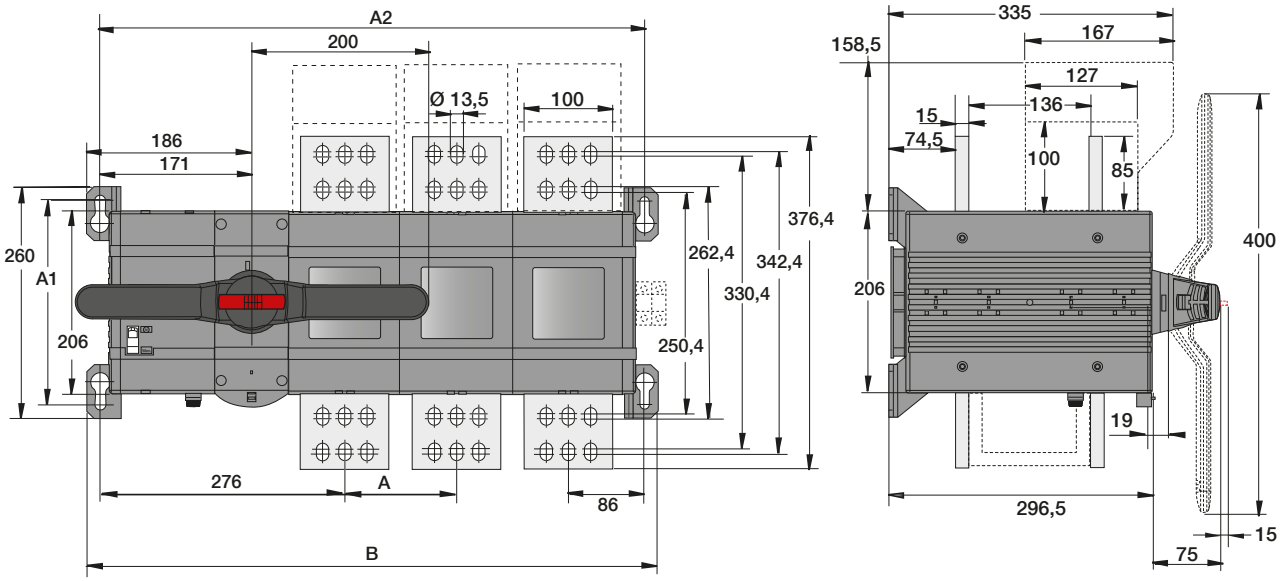

M00259/OTM2000-2500E_C_M C

OTM2000-2500_C_M			
[mm]	E2	E3	E4
A	126	126	126
A1	230	230	230
A2	488,5	614,5	740,5
B	518,5	644,5	770,5

Dimension drawings
Automatic transfer switches

OTM160...250E_C_2D_, OTM160...250E_C_3D_

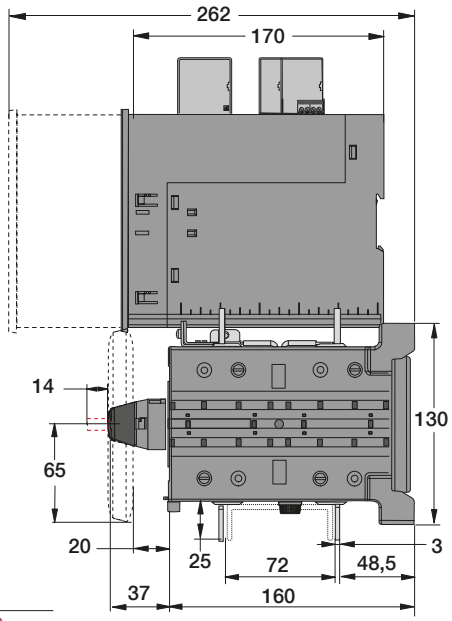

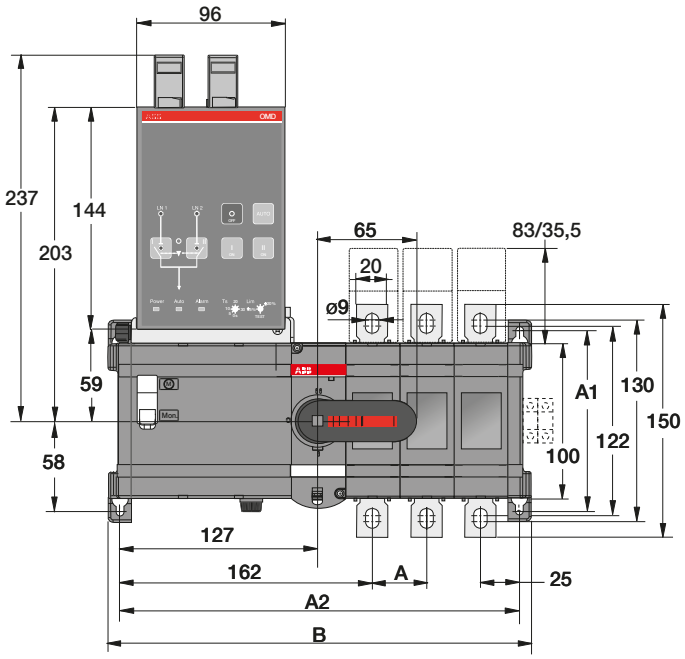

13/OTM160-250E_C_2D_ C

OTM160-250_C_D_		
[mm]	E3	E4
A	35	35
A1	116	116
A2	257	292
B	272	307

OTM160...250E_C_8D_

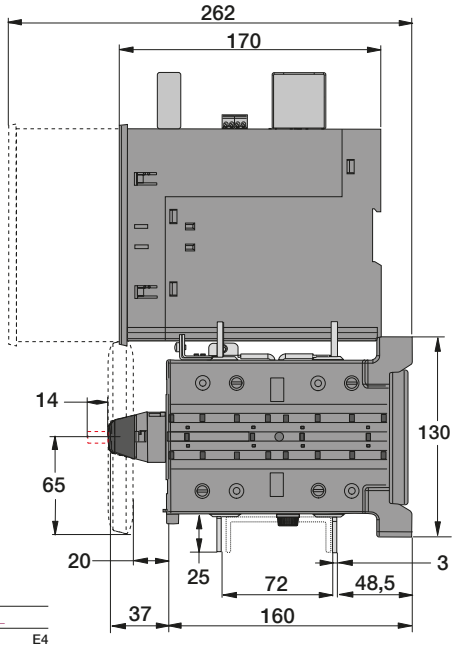

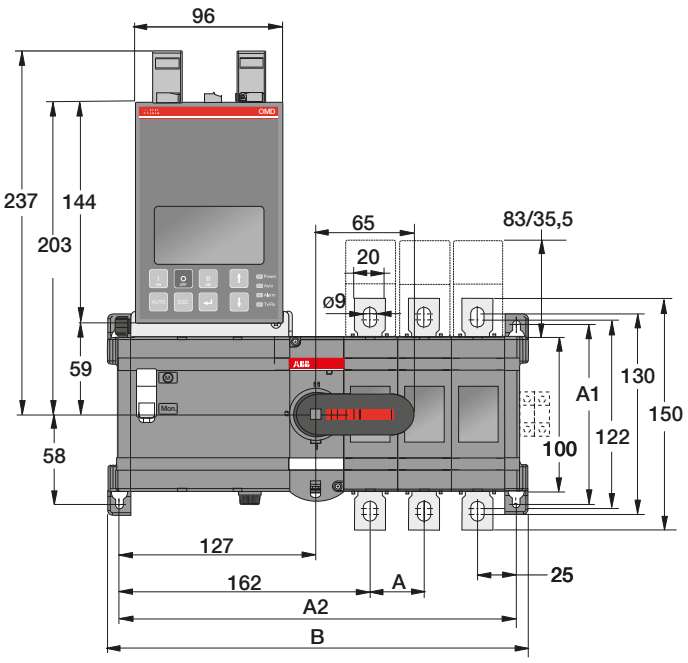

M00184/ OTM160-250E_C_8D_ C

OTM160-250_C_D_		
[mm]	E3	E4
A	35	35
A1	116	116
A2	257	292
B	272	307

Dimension drawings
Automatic transfer switches

OTM160...250E_WC_2D_, OTM160...250E_WC_3D_

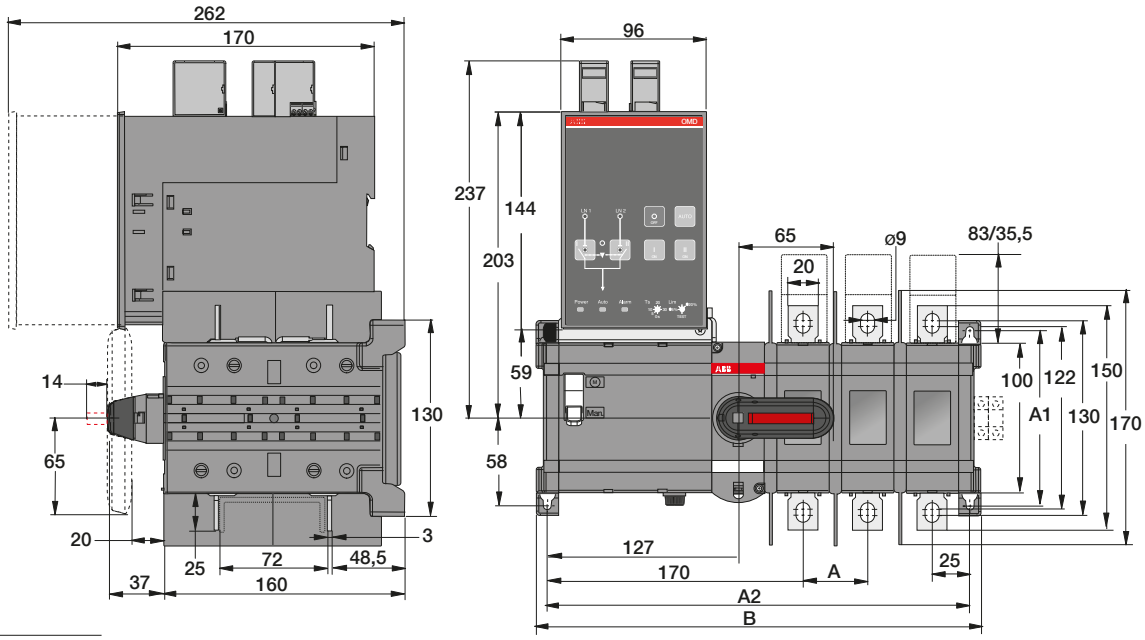

M00186/ OTM160-250E_WC_2D_ C

OTM160-250_WC_D_		
[mm]	E3	E4
A	43	43
A1	116	116
A2	281	324
B	296	339

OTM160...250E_WC_8D_

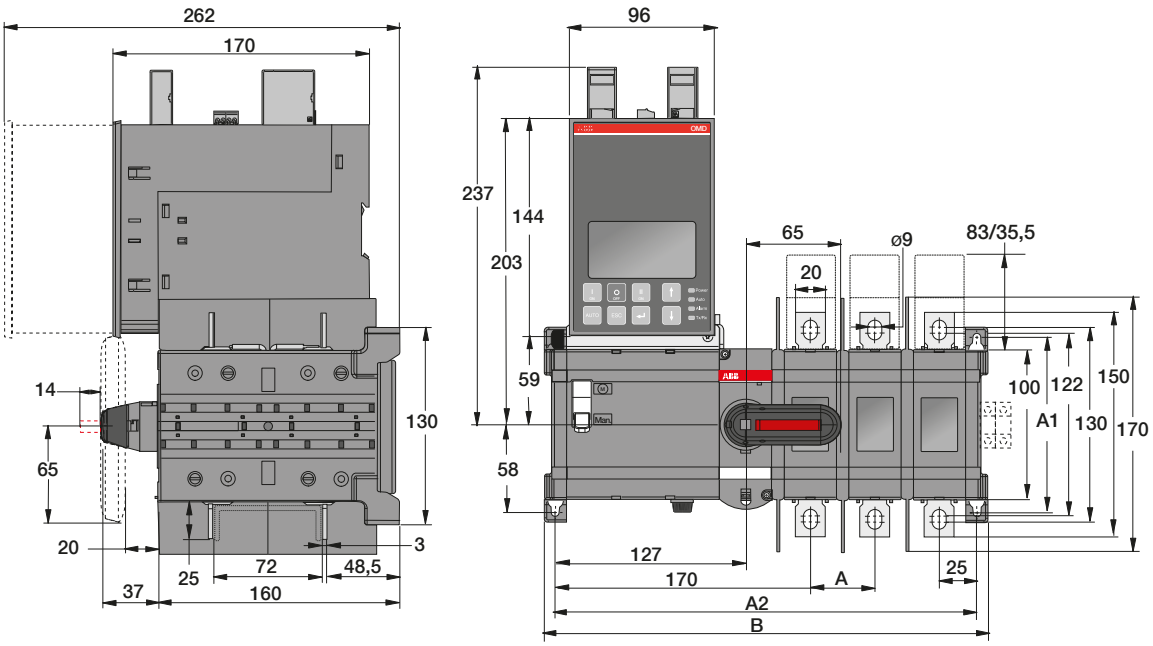

M00187/ OTM160-250E_WC_8D_ C

OTM160-250_WC_D_		
[mm]	E3	E4
A	43	43
A1	116	116
A2	281	324
B	296	339

Dimension drawings
Automatic transfer switches

OTM315...400E_C_2D_, OTM315...400E_C_3D

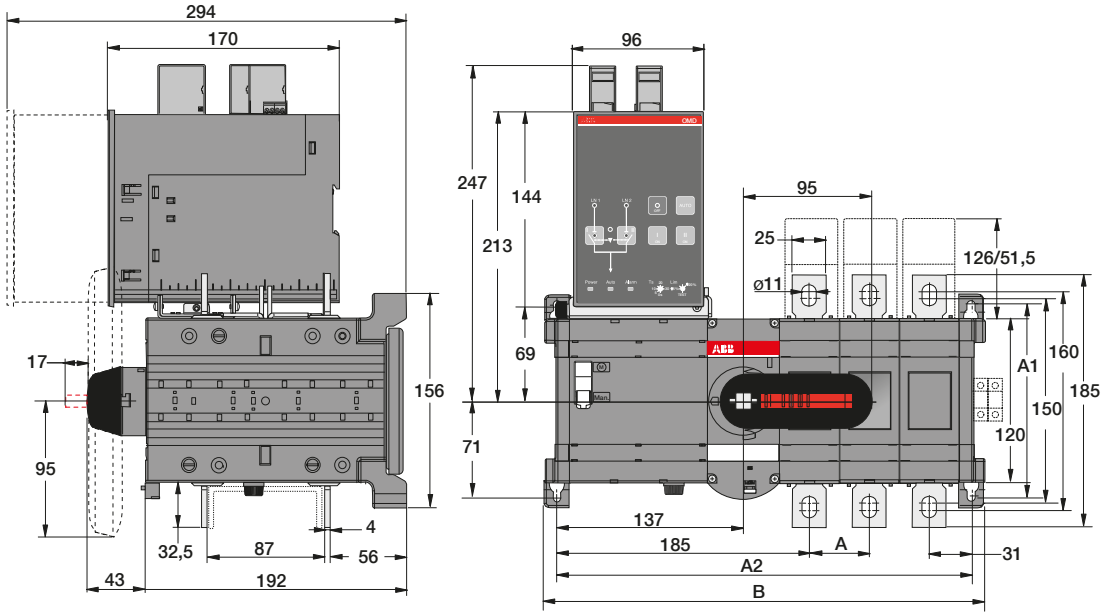

M00192/ OTM315-400E_C_2D_ C

OTM315-400_C_D_		
[mm]	E3	E4
A	44	44
A1	142	142
A2	304,5	348,5
B	323	367

OTM315...400E_C_8D_

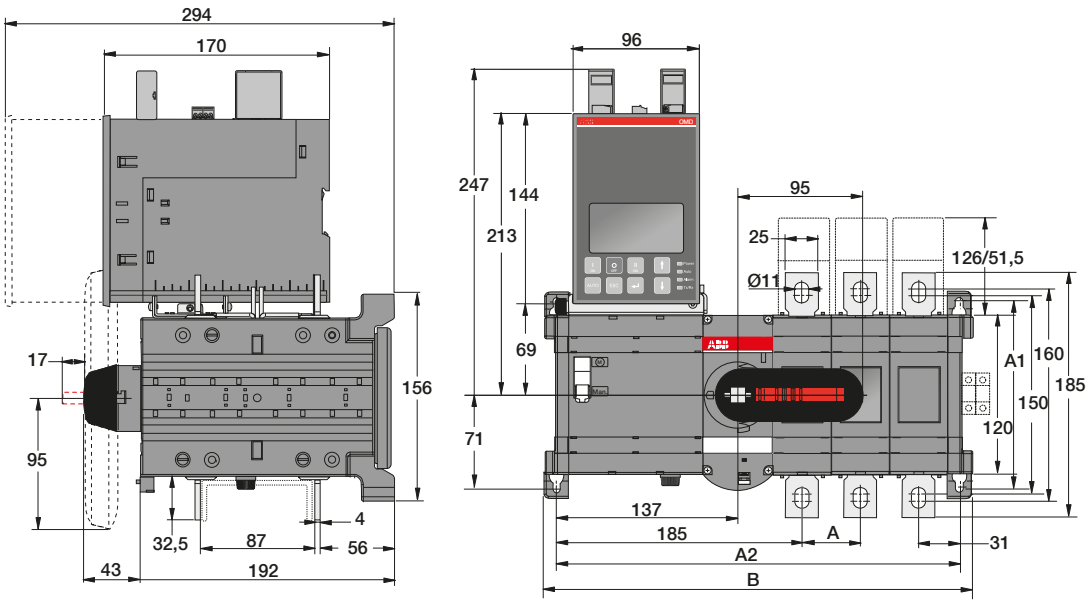

M00193/ OTM315-400E_C_8D_ C

OTM315-400_C_D_		
[mm]	E3	E4
A	44	44
A1	142	142
A2	304,5	348,5
B	323	367

Dimension drawings
Automatic transfer switches

OTM630...800E_C_2D_, OTM630...800E_C_3D_

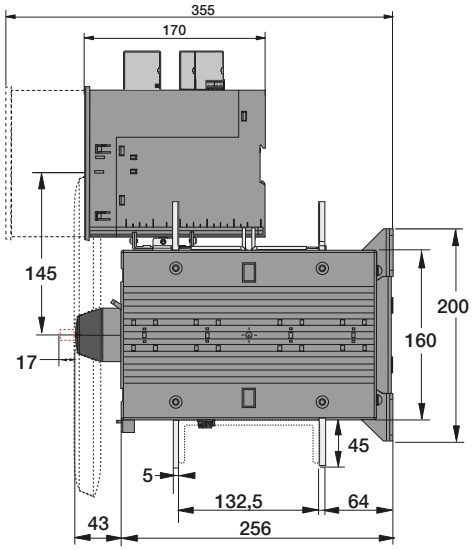

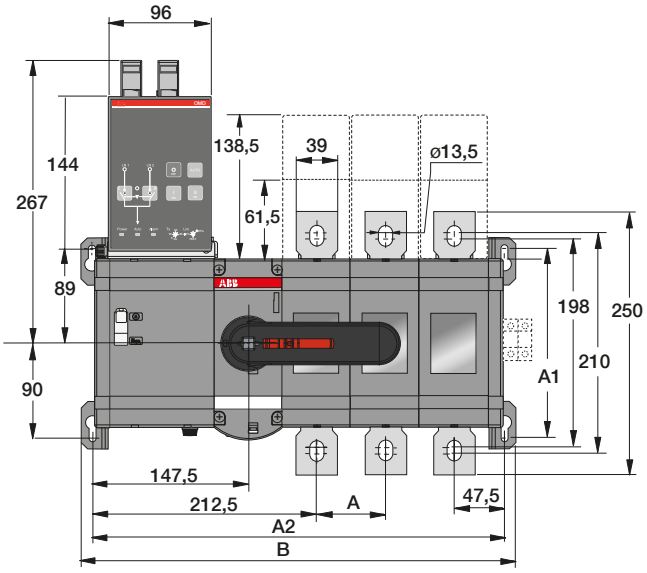

M00204/ OTM630-800E_C_2D_ C

OTM630-800_C_D_

[mm]	E2	E3	E4
A	65	65	65
A1	180	180	180
A2	325	390	455
B	346	411	476

OTM630...800E_C_8D_

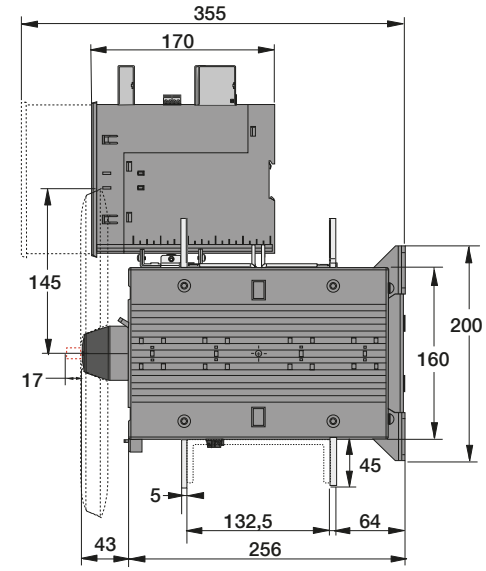

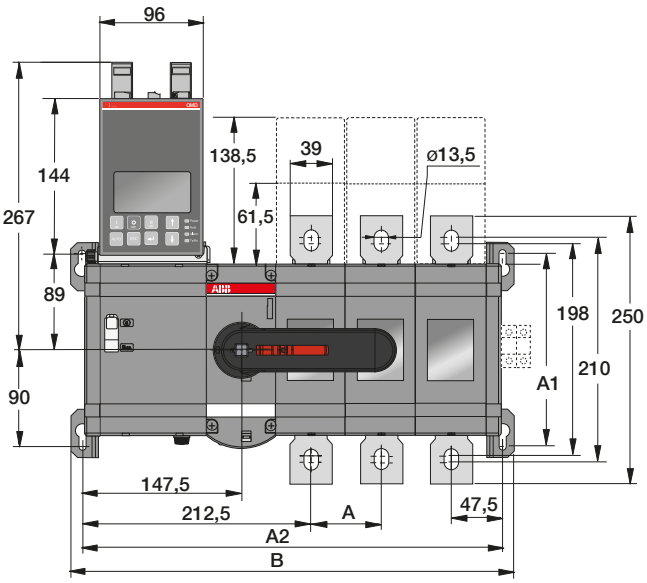

M00205/OTM630-800E_C_8D_ C

OTM630-800_C_D_

[mm]	E2	E3	E4
A	65	65	65
A1	180	180	180
A2	325	390	455
B	346	411	476

Dimension drawings
Automatic transfer switches

OTM1000...1250E_C2D_, OTM1000...1250E_C3D_

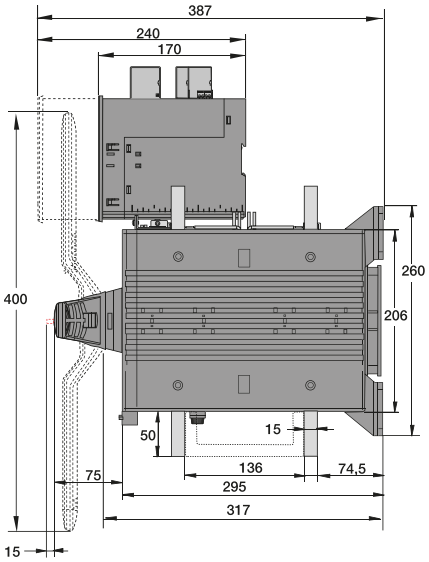

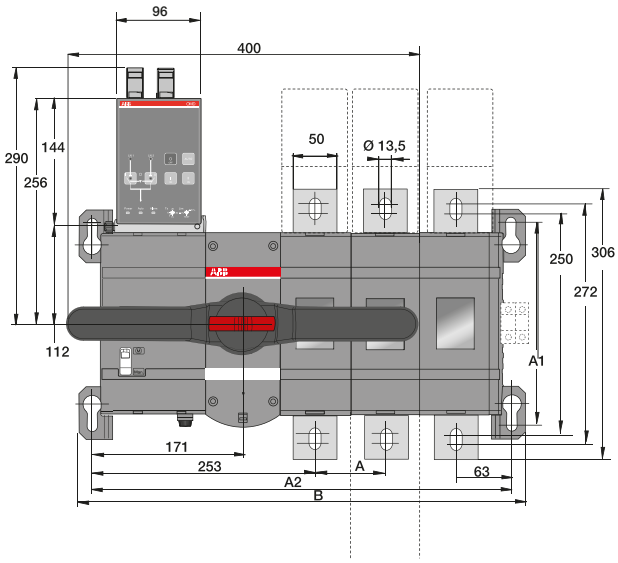

M00262/OTM1000_1250E2_4C2 B

OTM1000-1250E_C_D			
[mm]	E2	E3	E4
A	80	80	80
A1	230	230	230
A2	396	476	556
B	426	506	586

OTM1000...1250E_C_8D

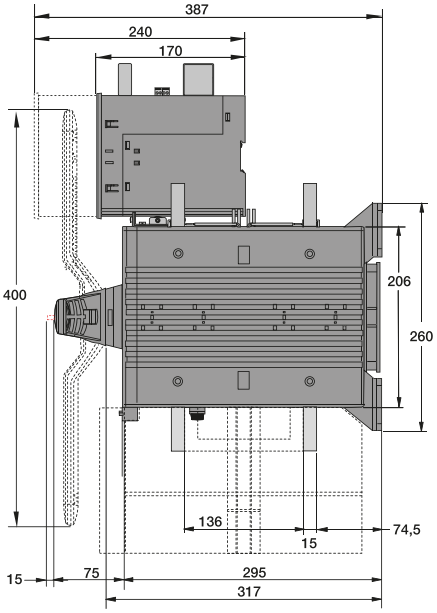

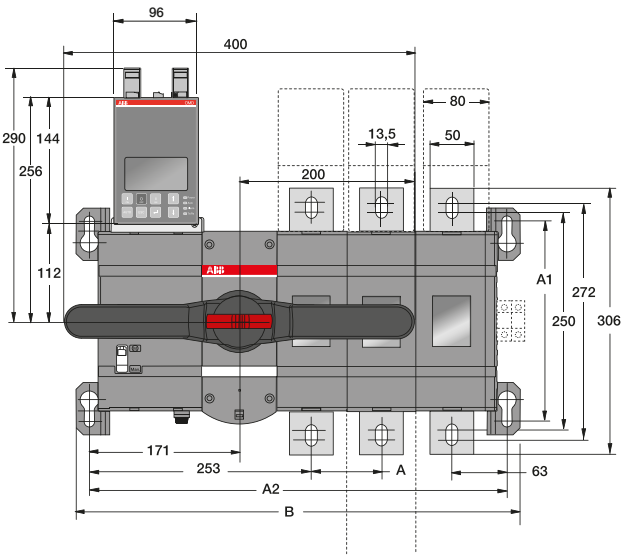

M00264/OTM1000_1250E2_4C8 B

OTM1000-1250E_C_D			
[mm]	E2	E3	E4
A	80	80	80
A1	230	230	230
A2	396	476	556
B	426	506	586

Dimension drawings
Automatic transfer switches

OTM1600E_C2D_, OTM1600E_C3D_

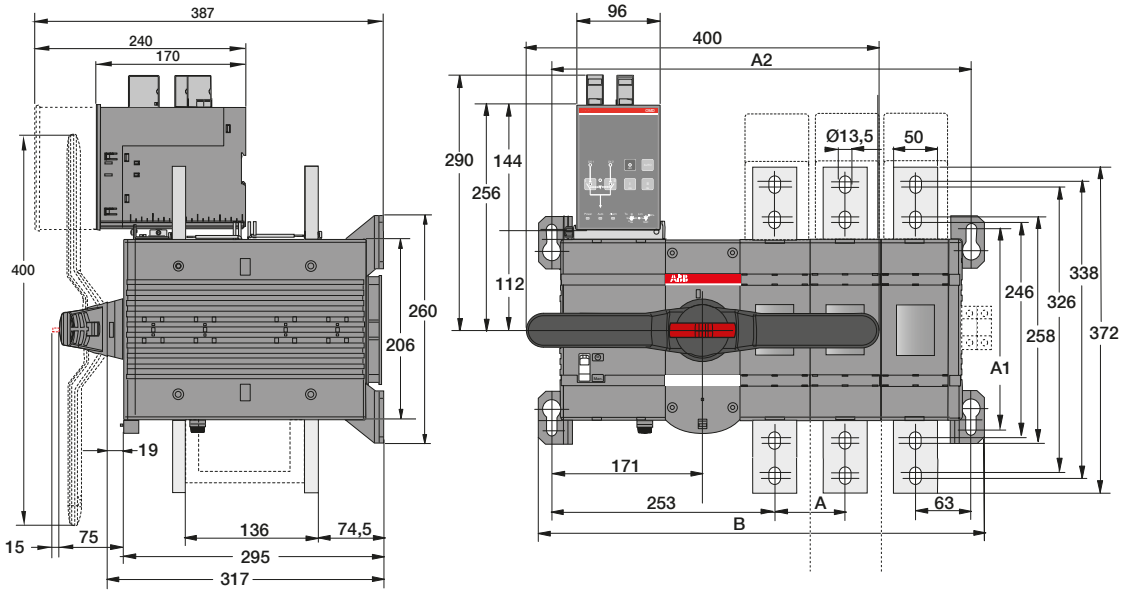

M00268/OTM1600E2-4C2D_ C

OTM1600_C_D_			
[mm]	E2	E3	E4
A	80	80	80
A1	230	230	230
A2	396	476	556
B	426	506	586

OTM1600E_C8D_

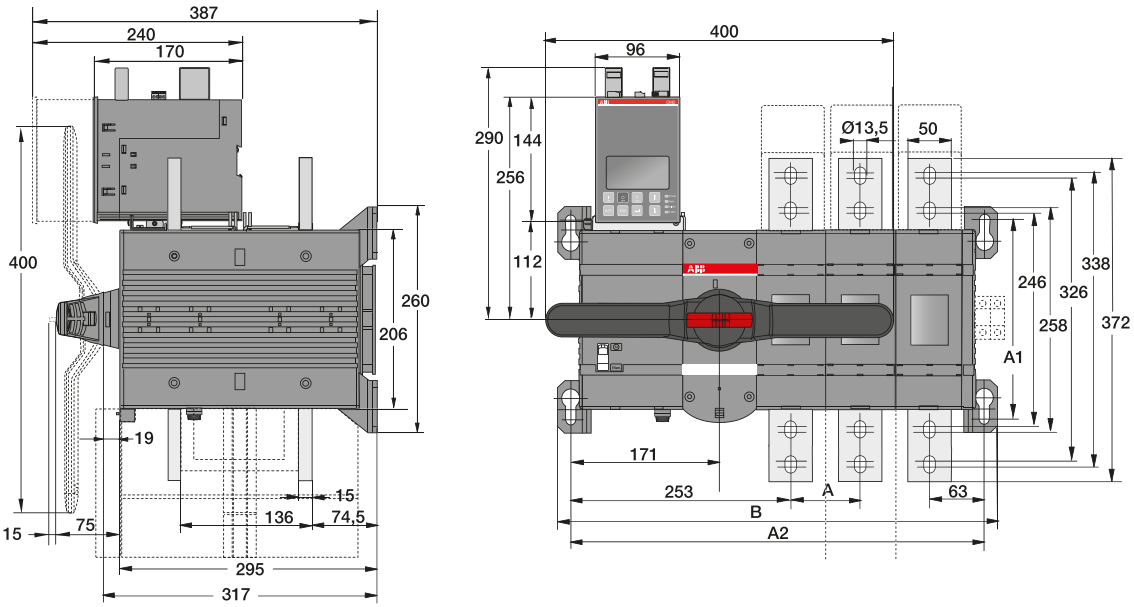

M00269/OTM1600E2_4C8_ B

OTM1600E_C_D			
[mm]	E2	E3	E4
A	80	80	80
A1	230	230	230
A2	396	476	556
B	426	506	586

Dimension drawings
Automatic control units

OMD200/300/800

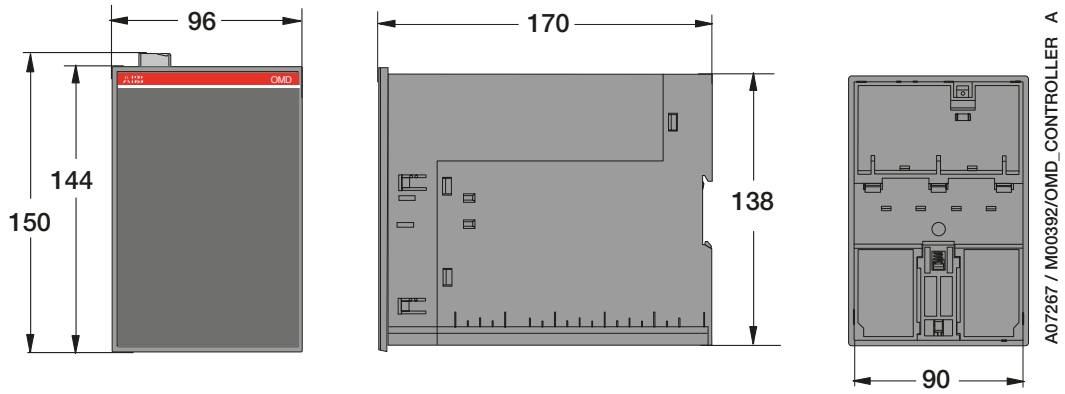

Dimension drawings
Manual change-over switches, UL/CSA -types

OT200U03/04CP

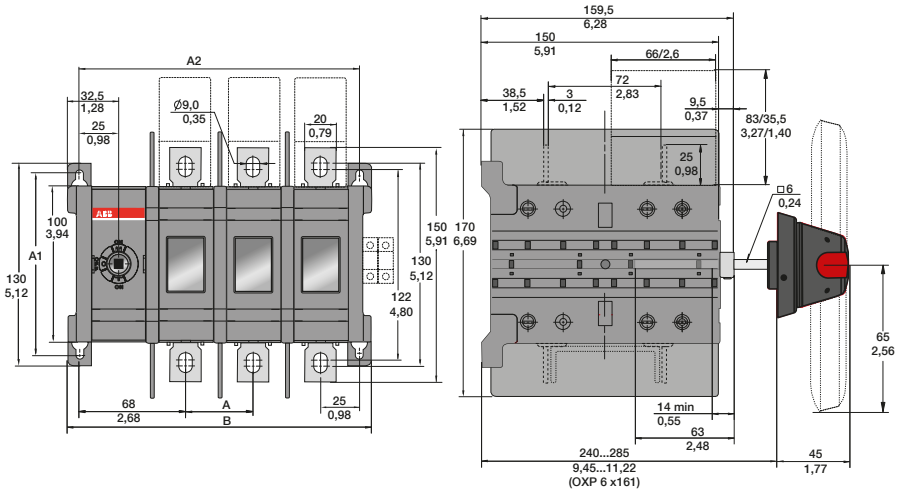

C000002 / OT200U02_04_C_ C

OT200_C_

[mm/in]	U02	U03	U04
A	43/1,69	43/1,69	43/1,69
A1	116/4,57	116/4,57	116/4,57
A2	136/5,35	179/7,05	222/8,74
B	151/5,94	194/7,64	237/9,33

OT400U03/04CP

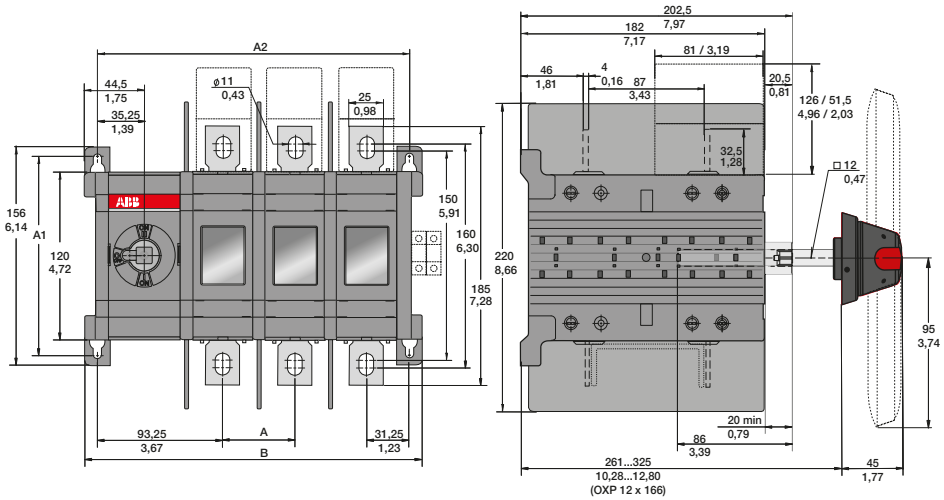

C000009 / OT400U02-04_C_ C

OT400_C_

[mm/in]	U02	U03	U04
A	54/2,13	54/2,13	54/2,13
A1	142/5,59	142/5,59	142/5,59
A2	178,5/7,03	232,5/9,15	286,5/11,28
B	197/7,76	251/9,88	305/12,01

Dimension drawings
Manual change-over switches, UL/CSA -types

OT600U03/04CP

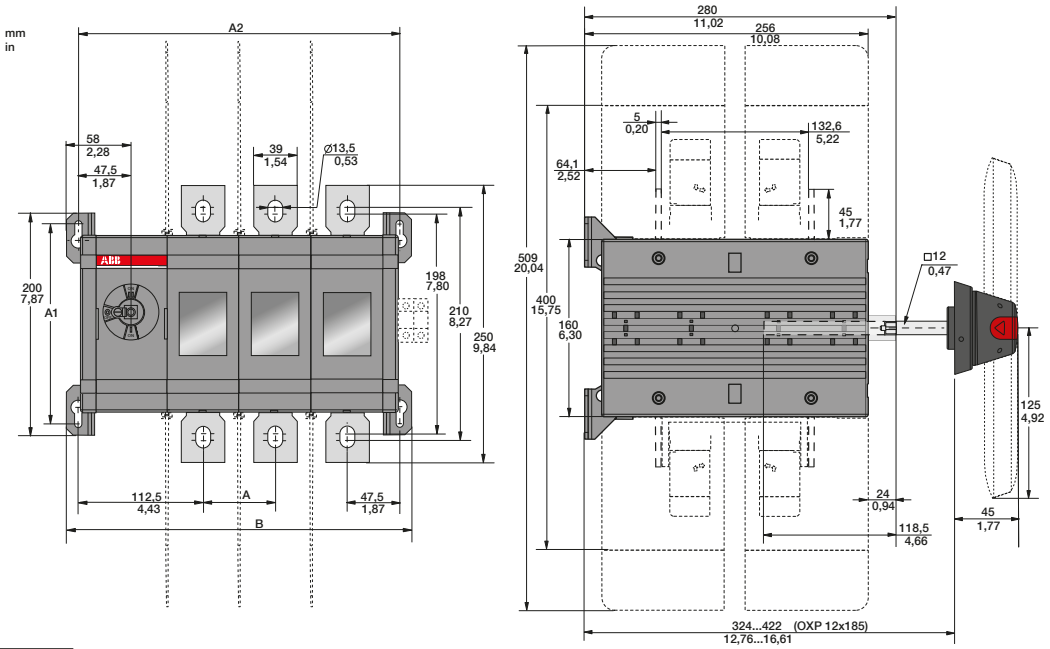

M00087/OT600U02-04C_ C

OT600_C_

[mm/in]	U02	U03	U04
A	65/2,56	65/2,56	65/2,56
A1	180/7,09	180/7,09	180/7,09
A2	225/8,86	290/11,42	355/13,98
B	246/9,69	311/12,24	376/14,80

OT800U03/04CP

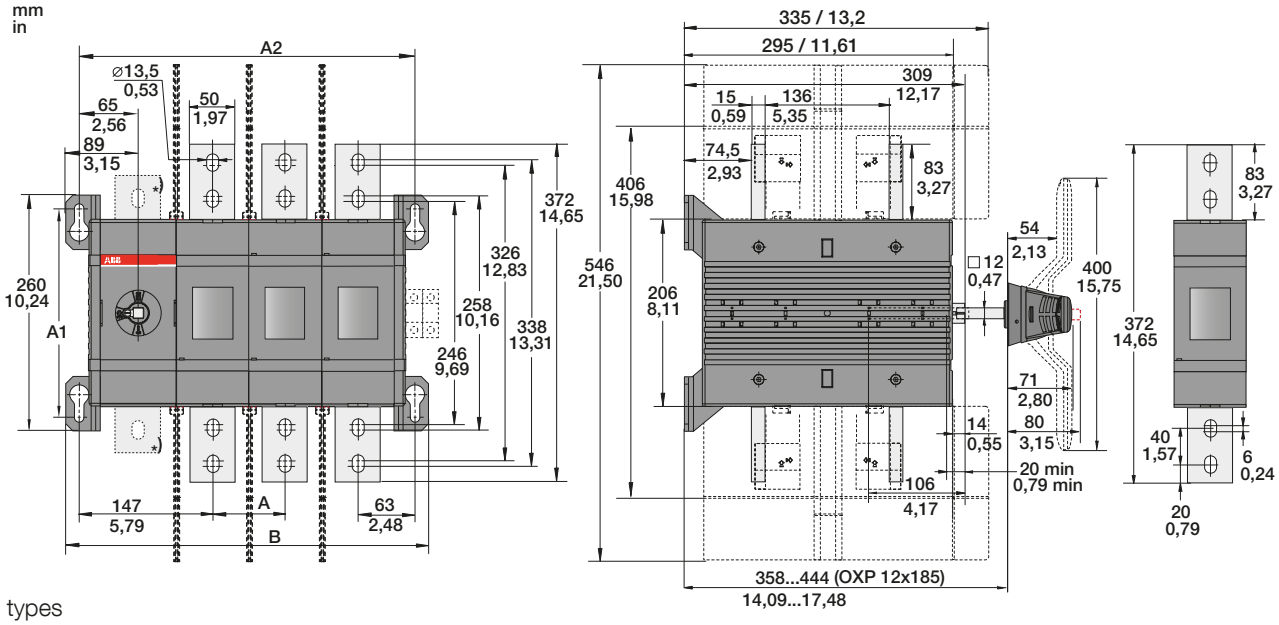

*) N3 types

M00156/OT800-1200U_C-1 C

OT800_C_

[mm]	U02	U03	U04
A	80/3,15	80/3,15	80/3,15
A1	230/9,06	230/9,06	230/9,06
A2	290/11,42	370/14,56	450/17,72
B	320/12,60	400/15,75	480/18,90

Dimension drawings
Dual power source

ODPSE230C

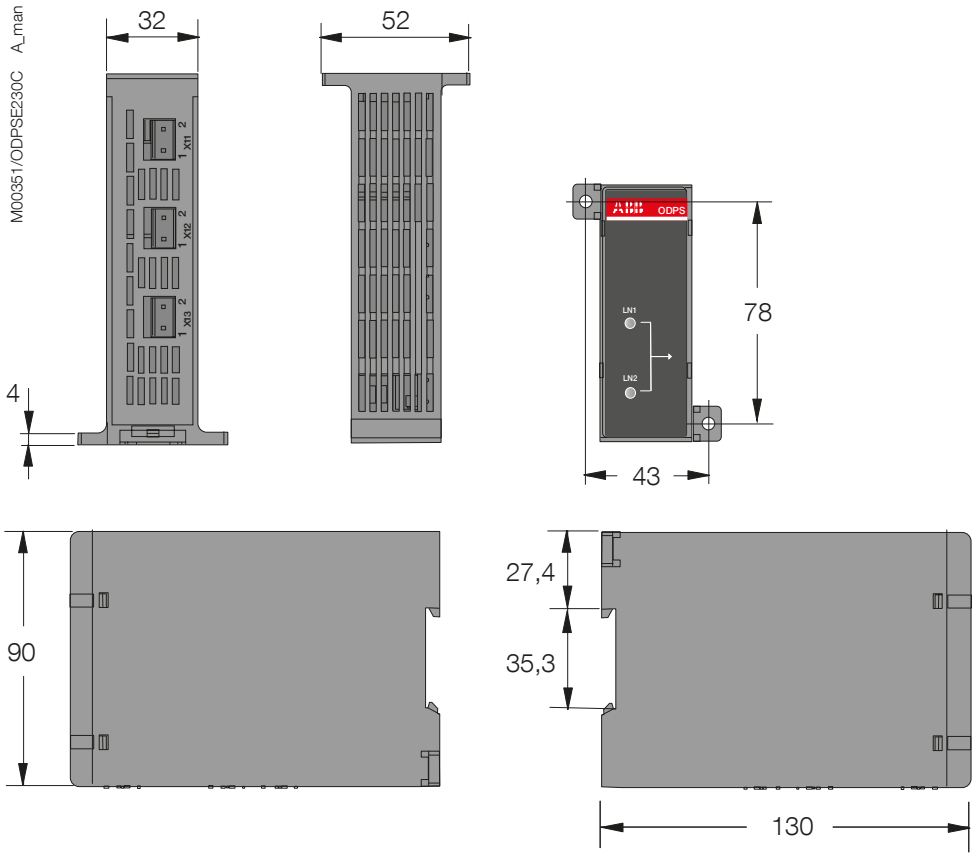

Dimension drawings
Handles

Plastic handles

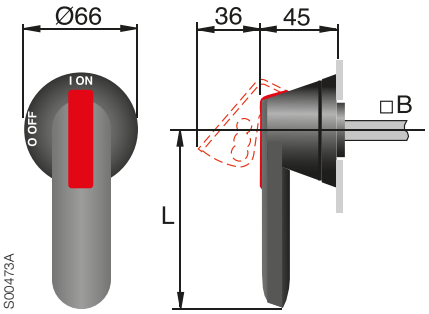

Handle type	Handle length L [mm]	Shaft B [mm]
OH_45J6E_	45	6
OH_65J6E_	65	6
OH_95J12E_	95	12
OH_125J12E_	125	12
OH_145J12E_	145	12
OH_175J12E_	175	12
OH_200J12E_	200	12
OH_275J12E_	275	12

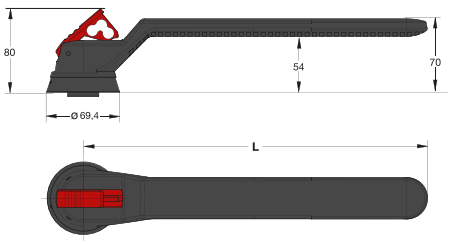

Type	L
OH_274J12	274

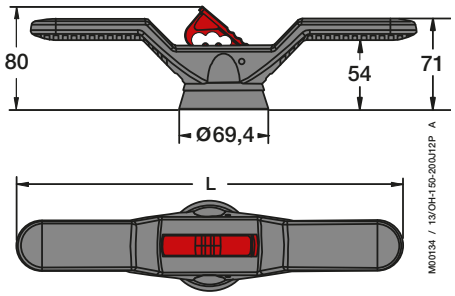

Handle type	L
OHB150J12P	300
OHB200J12P	400

Door drilling for OH_ handles:

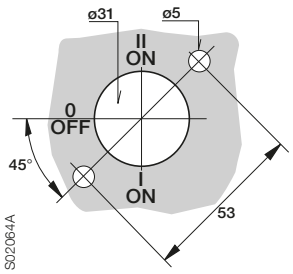

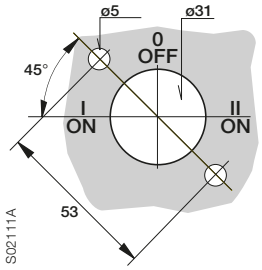

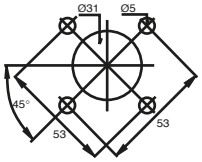

Metallic handles

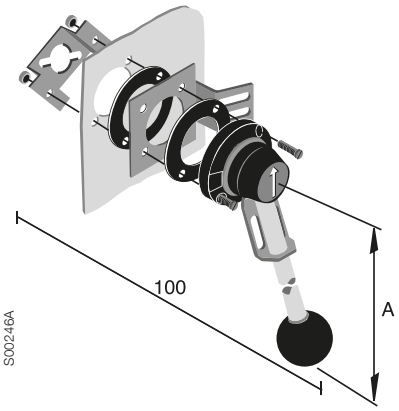

YASDA 21 (A=220)
YASDA 6 (A=320)

Door drilling for YASDA:

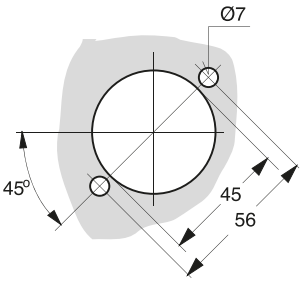

Handle knobs

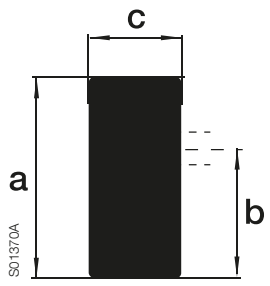

	a	b	c
OHBS2, OHRS2	40	25	13
OHBS3, OHRS3	39	23	18
OHBS9, OHRS9	72	55	16
OHBS11, OHRS11	57.5	34.5	20
OHBS12, OHRS12	37	22.5	19

Contact functions
Diagrams

Contact functions for OT16...125_C

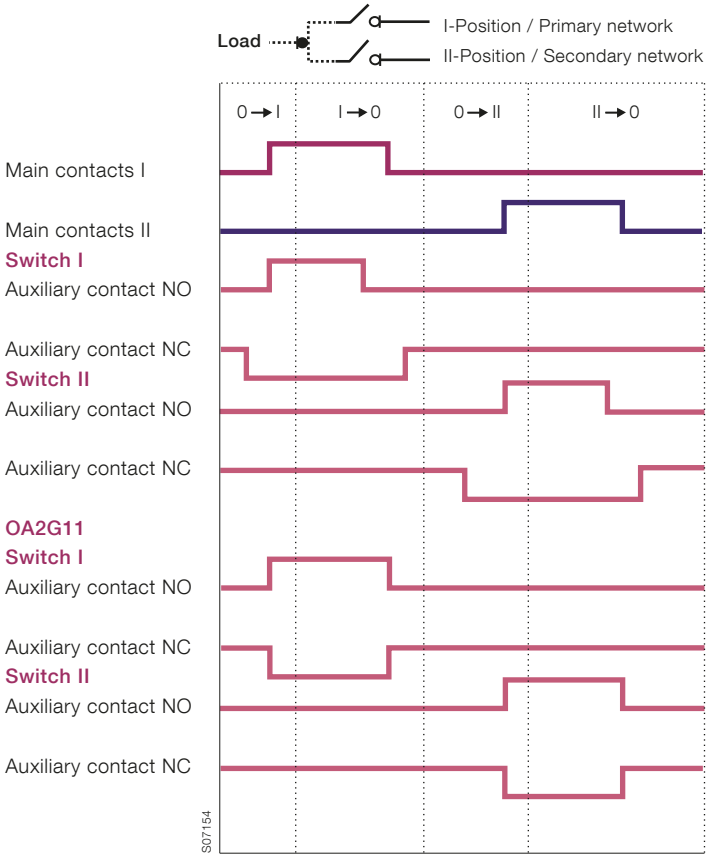

Contact functions for OT_160...2500_C

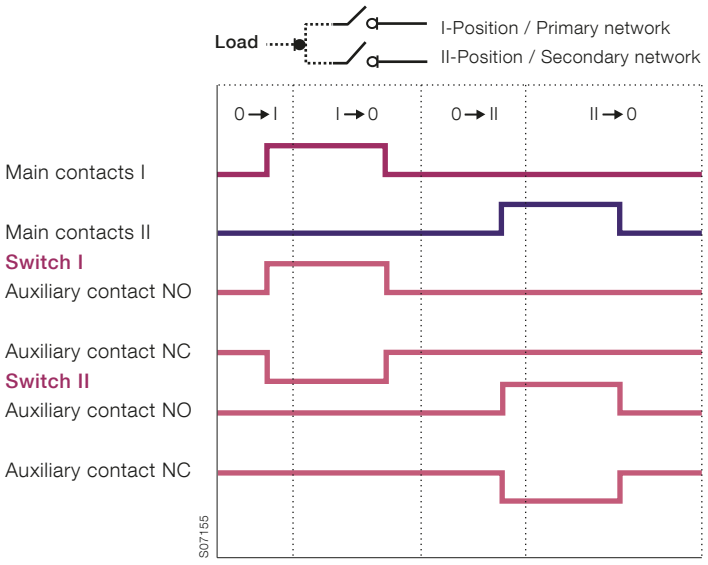

Contact functions
Diagrams

Contact functions for OT160...800_CL

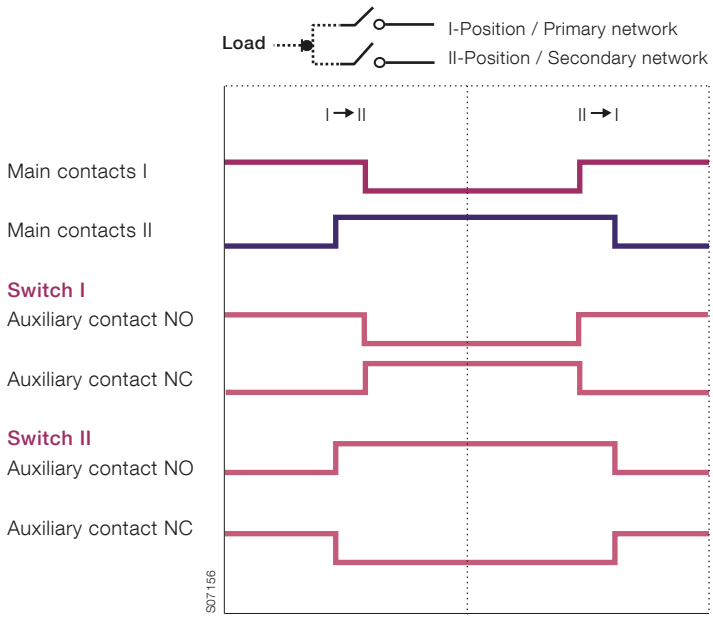

Index

Type	Order number	Description	Page
OA1G01	1SCA022353R4890	Auxiliary contact	47
OA1G10	1SCA022353R4970	Auxiliary contact	47
OA1G10AU	1SCA022436R7910	Auxiliary contact	47
OA2G11	1SCA022379R8100	Auxiliary contact	47
OA3G01	1SCA022456R7410	Auxiliary contact	47
OA3G01AU	1SCA022819R5260	Auxiliary contact	47
OA7G10	1SCA022673R1140	Auxiliary contact	47
OA8G01	1SCA022744R2240	Auxiliary contact	47
ODPSE230C	1SCA116892R1001	Dual power source	58
OESAZW1	1SCA022064R3710	Conversion kit	53
OETLZW11	1SCA022078R0030	Conversion kit	53
OETLZW12	1SCA022078R0200	Conversion kit	53
OETLZW13	1SCA022078R0460	Conversion kit	53
OETLZW16	1SCA022093R2070	Interlocking device for locks	58
OETLZW5	1SCA022052R3900	Interlocking device for locks	58
OHB125J12E011	1SCA022589R3340	Handle	42
OHB125J12E311	1SCA022615R1730	Handle	42
OHB145J12E65	1SCA112063R1001	Handle	43
OHB145J12E69	1SCA112066R1001	Handle	42
OHB200J12PE011	1SCA022873R4230	Handle	42
OHB200J12PE311	1SCA104685R1001	Handle	42
OHB200J12PE65	1SCA112078R1001	Handle	43
OHB274J12E011	1SCA122306R1001	Handle	42
OHB45J6E011	1SCA022594R7110	Handle	42
OHB45J6E311	1SCA022817R2130	Handle	42
OHB65D6CM	1SCA022807R9430	Handle	44
OHB65J6E011	1SCA022383R2480	Handle	42
OHB65J6E311	1SCA022662R4730	Handle	42
OHB65J6E65	1SCA112050R1001	Handle	43
OHB65J6E69	1SCA112052R1001	Handle	42
OHB95J12E011	1SCA022621R0760	Handle	42
OHB95J12E311	1SCA022779R2140	Handle	42
OHB95J12E65	1SCA112056R1001	Handle	43
OHB95J12E69	1SCA112058R1001	Handle	42
OHBS11	1SCA109092R1001	Handle knob	41
OHBS11/1	1SCA109093R1001	Handle knob	41
OHBS12	1SCA108252R1001	Handle knob	41
OHBS12/1	1SCA109094R1001	Handle knob	41
OHBS2	1SCA109089R1001	Handle knob	41
OHBS2/1	1SCA109090R1001	Handle knob	41
OHBS2AJE011	1SCA105220R1001	Handle	42
OHBS3	1SCA108320R1001	Handle knob	41
OHBS3/1	1SCA108319R1001	Handle knob	41
OHBS9	1SCA108665R1001	Handle knob	41
OHBS9/1	1SCA108689R1001	Handle knob	41
OHRS12	1SCA108253R1001	Handle knob	41
OHRS12/1	1SCA109097R1001	Handle knob	41
OHRS2	1SCA108598R1001	Handle knob	41
OHRS2/1	1SCA108599R1001	Handle knob	41
OHRS3	1SCA108667R1001	Handle knob	41
OHRS3/1	1SCA108688R1001	Handle knob	41
OHRS9	1SCA108666R1001	Handle knob	41
OHRS9/1	1SCA108690R1001	Handle knob	41
OHY125J12E011	1SCA022615R1650	Handle	42
OHY200J12PE011	1SCA104686R1001	Handle	42
OHY45J6E011	1SCA022817R2210	Handle	42
OHY45J6E311	1SCA022817R2300	Handle	42
OHY65J6E011	1SCA022779R1840	Handle	42
OHY95J12E011	1SCA022621R0920	Handle	42
OHYS2AJE011	1SCA105301R1001	Handle	42
OMD200E480C-A1	1SCA123789R1001	Automatic control unit	57
OMD300E480C-A1	1SCA123790R1001	Automatic control unit	57
OMD800E480C-A1	1SCA123791R1001	Automatic control unit	57
OMZB18	1SCA120153R1001	Voltage sensing connector	57
OMZB28	1SCA120154R1001	Voltage sensing connector	57
OMZB38	1SCA120155R1001	Voltage sensing connector	57
OMZB48	1SCA120156R1001	Voltage sensing connector	57
OMZC003	1SCA121324R1001	Parallel connection kit	55
OMZC004	1SCA121325R1001	Parallel connection kit	55
OMZC03	1SCA117037R1001	Parallel connection kit	55
OMZC04	1SCA117038R1001	Parallel connection kit	55
OMZC2	1SCA101001R1001	Cover plate	58
OMZD1	1SCA022787R5190	Panel fastener	57
OT1000E03CLP	1SCA117221R1001	Manual change-over switch	36
OT1000E03CP	1SCA022872R1680	Manual change-over switch	23
OT1000E04CLP	1SCA117224R1001	Manual change-over switch	36
OT1000E04CP	1SCA022872R1500	Manual change-over switch	23
OT1000E12CLP	1SCA117608R1001	Manual change-over switch	36
OT1000E12CP	1SCA103287R1001	Manual change-over switch	23
OT1000E13CLP	1SCA117677R1001	Manual change-over switch	36
OT1000E13CP	1SCA103291R1001	Manual change-over switch	23
OT1000E22CP	1SCA103289R1001	Manual change-over switch	23
OT100F3C	1SCA105008R1001	Manual change-over switch	20
OT100F4C	1SCA105019R1001	Manual change-over switch	20
OT1250E03CLP	1SCA117222R1001	Manual change-over switch	36
OT1250E03CP	1SCA022872R0790	Manual change-over switch	23
OT1250E04CLP	1SCA117225R1001	Manual change-over switch	36
OT1250E04CP	1SCA022872R1250	Manual change-over switch	23
OT1250E12CLP	1SCA117610R1001	Manual change-over switch	36
OT1250E12CP	1SCA103308R1001	Manual change-over switch	23
OT1250E13CLP	1SCA117678R1001	Manual change-over switch	36
OT1250E13CP	1SCA103313R1001	Manual change-over switch	23
OT1250E22CP	1SCA103311R1001	Manual change-over switch	23
OT125F3C	1SCA105037R1001	Manual change-over switch	20
OT125F4C	1SCA105054R1001	Manual change-over switch	20
OT1600E03CLP	1SCA117223R1001	Manual change-over switch	36
OT1600E03CP	1SCA022872R1840	Manual change-over switch	23
OT1600E04CLP	1SCA117226R1001	Manual change-over switch	36
OT1600E04CP	1SCA022872R2310	Manual change-over switch	23
OT1600E12CLP	1SCA117611R1001	Manual change-over switch	36
OT1600E12CP	1SCA103293R1001	Manual change-over switch	23
OT1600E13CLP	1SCA117615R1001	Manual change-over switch	36
OT1600E13CP	1SCA103306R1001	Manual change-over switch	23
OT1600E22CP	1SCA103303R1001	Manual change-over switch	23

Type	Order number	Description	Page
OT160E03CFP	1SCA106086R1001	Manual change-over switch	24
OT160E03CLP	1SCA108468R1001	Manual change-over switch	35
OT160E03CP	1SCA022772R6510	Manual change-over switch	21
OT160E03WCFP	1SCA108484R1001	Manual change-over switch	24
OT160E03WCLP	1SCA108486R1001	Manual change-over switch	35
OT160E03WCP	1SCA022772R8210	Manual change-over switch	21
OT160E04CFP	1SCA108489R1001	Manual change-over switch	24
OT160E04CLP	1SCA108491R1001	Manual change-over switch	35
OT160E04CP	1SCA022775R9440	Manual change-over switch	21
OT160E04WCFP	1SCA108492R1001	Manual change-over switch	24
OT160E04WCLP	1SCA108494R1001	Manual change-over switch	35
OT160E04WCP	1SCA022775R0220	Manual change-over switch	21
OT160E12CFP	1SCA108496R1001	Manual change-over switch	24
OT160E12CLP	1SCA108498R1001	Manual change-over switch	35
OT160E12CP	1SCA022776R9080	Manual change-over switch	21
OT160E13CFP	1SCA108502R1001	Manual change-over switch	24
OT160E13CLP	1SCA108504R1001	Manual change-over switch	35
OT160E13CP	1SCA022777R0170	Manual change-over switch	21
OT160E33CP	1SCA118537R1001	Manual change-over switch	21
OT160E33WCP	1SCA118603R1001	Manual change-over switch	21
OT16F3C	1SCA104816R1001	Manual change-over switch	20
OT16F4C	1SCA104831R1001	Manual change-over switch	20
OT2000E03CLP	1SCA117250R1001	Manual change-over switch	36
OT2000E03CP	1SCA103908R1001	Manual change-over switch	23
OT2000E04CLP	1SCA117251R1001	Manual change-over switch	36
OT2000E04CP	1SCA103912R1001	Manual change-over switch	23
OT2000E12CLP	1SCA117617R1001	Manual change-over switch	36
OT2000E12CP	1SCA103915R1001	Manual change-over switch	23
OT2000E13CLP	1SCA117620R1001	Manual change-over switch	36
OT2000E13CP	1SCA103918R1001	Manual change-over switch	23
OT2000E22CP	1SCA103953R1001	Manual change-over switch	23
OT200E03CFP	1SCA108520R1001	Manual change-over switch	24
OT200E03CLP	1SCA108522R1001	Manual change-over switch	35
OT200E03CP	1SCA022771R7520	Manual change-over switch	21
OT200E03WCFP	1SCA107578R1001	Manual change-over switch	24
OT200E03WCLP	1SCA108525R1001	Manual change-over switch	35
OT200E03WCP	1SCA022772R8720	Manual change-over switch	21
OT200E04CFP	1SCA108528R1001	Manual change-over switch	24
OT200E04CLP	1SCA108530R1001	Manual change-over switch	35
OT200E04CP	1SCA022771R7280	Manual change-over switch	21
OT200E04WCFP	1SCA108531R1001	Manual change-over switch	24
OT200E04WCLP	1SCA108532R1001	Manual change-over switch	35
OT200E04WCP	1SCA022775R0650	Manual change-over switch	21
OT200E12CFP	1SCA108535R1001	Manual change-over switch	24
OT200E12CLP	1SCA108537R1001	Manual change-over switch	35
OT200E12CP	1SCA022776R8510	Manual change-over switch	21
OT200E13CFP	1SCA108543R1001	Manual change-over switch	24
OT200E13CLP	1SCA108548R1001	Manual change-over switch	35
OT200E13CP	1SCA022777R0250	Manual change-over switch	21
OT200E33CP	1SCA118541R1001	Manual change-over switch	21
OT200E33WCP	1SCA118607R1001	Manual change-over switch	21
OT200U03CP	1SCA022771R5910	Manual change-over switch	37
OT200U04CP	1SCA022771R6210	Manual change-over switch	37
OT2500E03CLP	1SCA117249R1001	Manual change-over switch	36
OT2500E03CP	1SCA105615R1001	Manual change-over switch	23
OT2500E04CLP	1SCA117252R1001	Manual change-over switch	36
OT2500E04CP	1SCA103906R1001	Manual change-over switch	23
OT2500E12CLP	1SCA117619R1001	Manual change-over switch	36
OT2500E12CP	1SCA103891R1001	Manual change-over switch	23
OT2500E13CLP	1SCA117622R1001	Manual change-over switch	36
OT2500E13CP	1SCA103895R1001	Manual change-over switch	23
OT2500E22CP	1SCA103902R1001	Manual change-over switch	23

Type	Order number	Description	Page
OT250E03CFP	1SCA108591R1001	Manual change-over switch	24
OT250E03CLP	1SCA108593R1001	Manual change-over switch	35
OT250E03CP	1SCA022771R3450	Manual change-over switch	21
OT250E03WCFP	1SCA107577R1001	Manual change-over switch	24
OT250E03WCLP	1SCA107576R1001	Manual change-over switch	35
OT250E03WCP	1SCA022772R8300	Manual change-over switch	21
OT250E04CFP	1SCA108600R1001	Manual change-over switch	24
OT250E04CLP	1SCA108605R1001	Manual change-over switch	35
OT250E04CP	1SCA022775R4640	Manual change-over switch	21
OT250E04WCFP	1SCA108606R1001	Manual change-over switch	24
OT250E04WCLP	1SCA108607R1001	Manual change-over switch	35
OT250E04WCP	1SCA022775R0810	Manual change-over switch	21
OT250E12CFP	1SCA108609R1001	Manual change-over switch	24
OT250E12CLP	1SCA108611R1001	Manual change-over switch	35
OT250E12CP	1SCA022776R9320	Manual change-over switch	21
OT250E13CFP	1SCA108615R1001	Manual change-over switch	24
OT250E13CLP	1SCA108618R1001	Manual change-over switch	35
OT250E13CP	1SCA022777R0330	Manual change-over switch	21
OT250E33CP	1SCA118551R1001	Manual change-over switch	21
OT250E33WCP	1SCA118608R1001	Manual change-over switch	21
OT25F3C	1SCA104863R1001	Manual change-over switch	20
OT25F4C	1SCA104877R1001	Manual change-over switch	20
OT315E03CFP	1SCA108629R1001	Manual change-over switch	24
OT315E03CLP	1SCA108630R1001	Manual change-over switch	35
OT315E03CP	1SCA022772R6780	Manual change-over switch	22
OT315E04CFP	1SCA114535R1001	Manual change-over switch	24
OT315E04CLP	1SCA106404R1001	Manual change-over switch	35
OT315E04CP	1SCA022775R7150	Manual change-over switch	22
OT315E12CFP	1SCA108633R1001	Manual change-over switch	24
OT315E12CLP	1SCA106419R1001	Manual change-over switch	35
OT315E12CP	1SCA022776R9910	Manual change-over switch	22
OT315E13CFP	1SCA106436R1001	Manual change-over switch	24
OT315E13CLP	1SCA106443R1001	Manual change-over switch	35
OT315E13CP	1SCA022777R0410	Manual change-over switch	22
OT315E33CP	1SCA118635R1001	Manual change-over switch	22
OT400E03CFP	1SCA106360R1001	Manual change-over switch	24
OT400E03CLP	1SCA108641R1001	Manual change-over switch	35
OT400E03CP	1SCA022771R8500	Manual change-over switch	22
OT400E04CFP	1SCA108650R1001	Manual change-over switch	24
OT400E04CLP	1SCA106405R1001	Manual change-over switch	35
OT400E04CP	1SCA022771R8680	Manual change-over switch	22
OT400E12CFP	1SCA108652R1001	Manual change-over switch	24
OT400E12CLP	1SCA106423R1001	Manual change-over switch	35
OT400E12CP	1SCA022776R9590	Manual change-over switch	22
OT400E13CFP	1SCA106441R1001	Manual change-over switch	24
OT400E13CLP	1SCA106447R1001	Manual change-over switch	35
OT400E13CP	1SCA022777R0500	Manual change-over switch	22
OT400E33CP	1SCA118629R1001	Manual change-over switch	22
OT400U03CP	1SCA022771R2810	Manual change-over switch	37
OT400U04CP	1SCA022771R2300	Manual change-over switch	37
OT40F3C	1SCA104913R1001	Manual change-over switch	20
OT40F4C	1SCA104934R1001	Manual change-over switch	20
OT600U03CP	1SCA022785R5320	Manual change-over switch	37
OT600U04CP	1SCA022785R5410	Manual change-over switch	37
OT630E03CFP	1SCA106915R1001	Manual change-over switch	24
OT630E03CLP	1SCA106917R1001	Manual change-over switch	36
OT630E03CP	1SCA022785R6050	Manual change-over switch	22
OT630E04CFP	1SCA108753R1001	Manual change-over switch	24
OT630E04CLP	1SCA106947R1001	Manual change-over switch	36
OT630E04CP	1SCA022785R6130	Manual change-over switch	22
OT630E12CFP	1SCA106963R1001	Manual change-over switch	24
OT630E12CLP	1SCA106968R1001	Manual change-over switch	36

Type	Order number	Description	Page
OT630E12CP	1SCA022785R8690	Manual change-over switch	22
OT630E13CFP	1SCA106988R1001	Manual change-over switch	24
OT630E13CLP	1SCA106981R1001	Manual change-over switch	36
OT630E13CP	1SCA022785R9070	Manual change-over switch	22
OT630E33CP	1SCA118652R1001	Manual change-over switch	22
OT63F3C	1SCA105338R1001	Manual change-over switch	20
OT63F4C	1SCA105369R1001	Manual change-over switch	20
OT800E03CFP	1SCA106916R1001	Manual change-over switch	24
OT800E03CLP	1SCA106928R1001	Manual change-over switch	36
OT800E03CP	1SCA022785R6300	Manual change-over switch	22
OT800E04CFP	1SCA106945R1001	Manual change-over switch	24
OT800E04CLP	1SCA106952R1001	Manual change-over switch	36
OT800E04CP	1SCA022785R6210	Manual change-over switch	22
OT800E12CFP	1SCA106966R1001	Manual change-over switch	24
OT800E12CLP	1SCA106973R1001	Manual change-over switch	36
OT800E12CP	1SCA022785R8850	Manual change-over switch	22
OT800E13CFP	1SCA106983R1001	Manual change-over switch	24
OT800E13CLP	1SCA106976R1001	Manual change-over switch	36
OT800E13CP	1SCA022785R9230	Manual change-over switch	22
OT800E33CP	1SCA118649R1001	Manual change-over switch	22
OT800U03CP	1SCA104031R1001	Manual change-over switch	37
OT800U04CP	1SCA104036R1001	Manual change-over switch	37
OT80F3C	1SCA105402R1001	Manual change-over switch	20
OT80F4C	1SCA105418R1001	Manual change-over switch	20
OTB1600/6C	1SCA104661R1001	Phase separator	50
OTB800/6C	1SCA107272R1001	Phase separator	50
OTM1000E2CM230V	1SCA121279R1001	Motorized change-over switch	27
OTM1000E3C8D230C	1SCA112868R1001	Automatic transfer switch	34
OTM1000E3CM110V	1SCA113653R1001	Motorized change-over switch	28
OTM1000E3CM230C	1SCA112677R1001	Motorized change-over switch	27
OTM1000E3CM24D	1SCA113672R1001	Motorized change-over switch	30
OTM1000E3CM48D	1SCA113663R1001	Motorized change-over switch	29
OTM1000E4C2D230C	1SCA112858R1001	Automatic transfer switch	33
OTM1000E4C3D230C	1SCA112852R1001	Automatic transfer switch	33
OTM1000E4C8D230C	1SCA112861R1001	Automatic transfer switch	34
OTM1000E4CM110V	1SCA113656R1001	Motorized change-over switch	28
OTM1000E4CM230C	1SCA112703R1001	Motorized change-over switch	27
OTM1000E4CM24D	1SCA113675R1001	Motorized change-over switch	30
OTM1000E4CM48D	1SCA113666R1001	Motorized change-over switch	29
OTM100F3CMA230V	1SCA120071R1001	Motorized change-over switch	25
OTM100F4CMA230V	1SCA120098R1001	Motorized change-over switch	25
OTM1250E2CM230V	1SCA121293R1001	Motorized change-over switch	27
OTM1250E3C8D230C	1SCA112862R1001	Automatic transfer switch	34
OTM1250E3CM110V	1SCA113652R1001	Motorized change-over switch	28
OTM1250E3CM230C	1SCA112676R1001	Motorized change-over switch	27
OTM1250E3CM24D	1SCA113671R1001	Motorized change-over switch	30
OTM1250E3CM48D	1SCA113662R1001	Motorized change-over switch	29
OTM1250E4C2D230C	1SCA112857R1001	Automatic transfer switch	33
OTM1250E4C3D230C	1SCA112851R1001	Automatic transfer switch	33
OTM1250E4C8D230C	1SCA112864R1001	Automatic transfer switch	34
OTM1250E4CM110V	1SCA113655R1001	Motorized change-over switch	28
OTM1250E4CM230C	1SCA112702R1001	Motorized change-over switch	27
OTM1250E4CM24D	1SCA113674R1001	Motorized change-over switch	30
OTM1250E4CM48D	1SCA113665R1001	Motorized change-over switch	29
OTM125F3CMA230V	1SCA120070R1001	Motorized change-over switch	25
OTM125F4CMA230V	1SCA120097R1001	Motorized change-over switch	25
OTM1600E2CM230V	1SCA121280R1001	Motorized change-over switch	27
OTM1600E3C8D230C	1SCA112866R1001	Automatic transfer switch	34
OTM1600E3CM110V	1SCA113654R1001	Motorized change-over switch	28
OTM1600E3CM230C	1SCA112678R1001	Motorized change-over switch	27
OTM1600E3CM24D	1SCA113673R1001	Motorized change-over switch	30
OTM1600E3CM48D	1SCA113664R1001	Motorized change-over switch	29
OTM1600E4C2D230C	1SCA112854R1001	Automatic transfer switch	33
OTM1600E4C3D230C	1SCA112848R1001	Automatic transfer switch	33
OTM1600E4C8D230C	1SCA112867R1001	Automatic transfer switch	34
OTM1600E4CM110V	1SCA113657R1001	Motorized change-over switch	28
OTM1600E4CM230C	1SCA112704R1001	Motorized change-over switch	27
OTM1600E4CM24D	1SCA113676R1001	Motorized change-over switch	30
OTM1600E4CM48D	1SCA113667R1001	Motorized change-over switch	29
OTM160E2CM230V	1SCA121216R1001	Motorized change-over switch	26
OTM160E2WCM230V	1SCA121218R1001	Motorized change-over switch	26
OTM160E3C8D230C	1SCA101017R1001	Automatic transfer switch	34
OTM160E3CM110V	1SCA022845R8530	Motorized change-over switch	28
OTM160E3CM230C	1SCA022845R8610	Motorized change-over switch	26
OTM160E3CM24D	1SCA022845R8110	Motorized change-over switch	30
OTM160E3CM48D	1SCA022845R8450	Motorized change-over switch	29
OTM160E3WC8D230C	1SCA101036R1001	Automatic transfer switch	34
OTM160E3WCM110V	1SCA022846R3450	Motorized change-over switch	28
OTM160E3WCM230C	1SCA022846R4000	Motorized change-over switch	26
OTM160E3WCM24D	1SCA022846R3290	Motorized change-over switch	30
OTM160E3WCM48D	1SCA022846R3370	Motorized change-over switch	29
OTM160E4C2D230C	1SCA106230R1001	Automatic transfer switch	33
OTM160E4C3D230C	1SCA106305R1001	Automatic transfer switch	33
OTM160E4C8D230C	1SCA101020R1001	Automatic transfer switch	34
OTM160E4CM110V	1SCA022846R1080	Motorized change-over switch	28
OTM160E4CM230C	1SCA022848R1510	Motorized change-over switch	26
OTM160E4CM24D	1SCA022846R0860	Motorized change-over switch	30
OTM160E4CM48D	1SCA022846R0940	Motorized change-over switch	29
OTM160E4WC2D230C	1SCA101033R1001	Automatic transfer switch	33
OTM160E4WC3D230C	1SCA106306R1001	Automatic transfer switch	33
OTM160E4WC8D230C	1SCA101039R1001	Automatic transfer switch	34
OTM160E4WCM110V	1SCA022846R7360	Motorized change-over switch	28
OTM160E4WCM230C	1SCA022846R7440	Motorized change-over switch	26
OTM160E4WCM24D	1SCA022846R7100	Motorized change-over switch	30
OTM160E4WCM48D	1SCA022846R7280	Motorized change-over switch	29
OTM2000E2CM230V	1SCA121289R1001	Motorized change-over switch	27
OTM2000E3CM110V	1SCA113683R1001	Motorized change-over switch	28
OTM2000E3CM230C	1SCA112709R1001	Motorized change-over switch	27
OTM2000E3CM24D	1SCA113695R1001	Motorized change-over switch	30
OTM2000E3CM48D	1SCA113689R1001	Motorized change-over switch	29
OTM2000E4CM110V	1SCA113685R1001	Motorized change-over switch	28
OTM2000E4CM230C	1SCA112712R1001	Motorized change-over switch	27
OTM2000E4CM24D	1SCA113697R1001	Motorized change-over switch	30
OTM2000E4CM48D	1SCA113691R1001	Motorized change-over switch	29
OTM200E2CM230V	1SCA121209R1001	Motorized change-over switch	26
OTM200E2WCM230V	1SCA121294R1001	Motorized change-over switch	26
OTM200E3C8D230C	1SCA101018R1001	Automatic transfer switch	34
OTM200E3CM110V	1SCA022845R8880	Motorized change-over switch	28
OTM200E3CM230C	1SCA022845R8960	Motorized change-over switch	26
OTM200E3CM24D	1SCA022845R8290	Motorized change-over switch	30
OTM200E3CM48D	1SCA022845R8700	Motorized change-over switch	29
OTM200E3WC8D230C	1SCA101037R1001	Automatic transfer switch	34
OTM200E3WCM110V	1SCA022846R3880	Motorized change-over switch	28
OTM200E3WCM230C	1SCA022846R3960	Motorized change-over switch	26
OTM200E3WCM24D	1SCA022846R3610	Motorized change-over switch	30
OTM200E3WCM48D	1SCA022846R3700	Motorized change-over switch	29
OTM200E4C2D230C	1SCA106671R1001	Automatic transfer switch	33
OTM200E4C3D230C	1SCA106309R1001	Automatic transfer switch	33
OTM200E4C8D230C	1SCA101021R1001	Automatic transfer switch	34
OTM200E4CM110V	1SCA022846R1410	Motorized change-over switch	28
OTM200E4CM230C	1SCA022846R1590	Motorized change-over switch	26
OTM200E4CM24D	1SCA022846R1240	Motorized change-over switch	30
OTM200E4CM48D	1SCA022846R1320	Motorized change-over switch	29
OTM200E4WC2D230C	1SCA101034R1001	Automatic transfer switch	33

Type	Order number	Description	Page
OTM200E4WC3D230C	1SCA106310R1001	Automatic transfer switch	33
OTM200E4WC8D230C	1SCA101040R1001	Automatic transfer switch	34
OTM200E4WCM110V	1SCA022846R7790	Motorized change-over switch	28
OTM200E4WCM230C	1SCA022846R7870	Motorized change-over switch	26
OTM200E4WCM24D	1SCA022846R7520	Motorized change-over switch	30
OTM200E4WCM48D	1SCA022846R7610	Motorized change-over switch	29
OTM2500E2CM230V	1SCA121291R1001	Motorized change-over switch	27
OTM2500E3CM110V	1SCA113684R1001	Motorized change-over switch	28
OTM2500E3CM230C	1SCA112710R1001	Motorized change-over switch	27
OTM2500E3CM24D	1SCA113696R1001	Motorized change-over switch	30
OTM2500E3CM48D	1SCA113690R1001	Motorized change-over switch	29
OTM2500E4CM110V	1SCA113686R1001	Motorized change-over switch	28
OTM2500E4CM230C	1SCA112713R1001	Motorized change-over switch	27
OTM2500E4CM24D	1SCA113698R1001	Motorized change-over switch	30
OTM2500E4CM48D	1SCA113692R1001	Motorized change-over switch	29
OTM250E2CM230V	1SCA121211R1001	Motorized change-over switch	26
OTM250E2WCM230V	1SCA121220R1001	Motorized change-over switch	26
OTM250E3C8D230C	1SCA101019R1001	Automatic transfer switch	34
OTM250E3CM110V	1SCA022845R9180	Motorized change-over switch	28
OTM250E3CM230C	1SCA022845R9260	Motorized change-over switch	26
OTM250E3CM24D	1SCA022845R8370	Motorized change-over switch	30
OTM250E3CM48D	1SCA022845R9000	Motorized change-over switch	29
OTM250E3WC8D230C	1SCA101038R1001	Automatic transfer switch	34
OTM250E3WCM110V	1SCA022846R4690	Motorized change-over switch	28
OTM250E3WCM230C	1SCA022846R4770	Motorized change-over switch	26
OTM250E3WCM24D	1SCA022846R4420	Motorized change-over switch	30
OTM250E3WCM48D	1SCA022846R4510	Motorized change-over switch	29
OTM250E4C2D230C	1SCA101016R1001	Automatic transfer switch	33
OTM250E4C3D230C	1SCA106313R1001	Automatic transfer switch	33
OTM250E4C8D230C	1SCA101022R1001	Automatic transfer switch	34
OTM250E4CM110V	1SCA022846R1830	Motorized change-over switch	28
OTM250E4CM230C	1SCA022846R1910	Motorized change-over switch	26
OTM250E4CM24D	1SCA022846R1670	Motorized change-over switch	30
OTM250E4CM48D	1SCA022846R1750	Motorized change-over switch	29
OTM250E4WC2D230C	1SCA101035R1001	Automatic transfer switch	33
OTM250E4WC3D230C	1SCA106314R1001	Automatic transfer switch	33
OTM250E4WC8D230C	1SCA101041R1001	Automatic transfer switch	34
OTM250E4WCM110V	1SCA022846R8170	Motorized change-over switch	28
OTM250E4WCM230C	1SCA022846R8250	Motorized change-over switch	26
OTM250E4WCM24D	1SCA022846R7950	Motorized change-over switch	30
OTM250E4WCM48D	1SCA022846R8090	Motorized change-over switch	29
OTM315E2CM230V	1SCA121221R1001	Motorized change-over switch	26
OTM315E3C8D230C	1SCA101062R1001	Automatic transfer switch	34
OTM315E3CM110V	1SCA022847R1120	Motorized change-over switch	28
OTM315E3CM230C	1SCA022847R1210	Motorized change-over switch	26
OTM315E3CM24D	1SCA022847R0910	Motorized change-over switch	30
OTM315E3CM48D	1SCA022847R1040	Motorized change-over switch	29
OTM315E4C2D230C	1SCA101059R1001	Automatic transfer switch	33
OTM315E4C3D230C	1SCA106317R1001	Automatic transfer switch	33
OTM315E4C8D230C	1SCA101063R1001	Automatic transfer switch	34
OTM315E4CM110V	1SCA022847R2790	Motorized change-over switch	28
OTM315E4CM230C	1SCA022847R2870	Motorized change-over switch	26
OTM315E4CM24D	1SCA022847R2520	Motorized change-over switch	30
OTM315E4CM48D	1SCA022847R2610	Motorized change-over switch	29
OTM400E2CM230V	1SCA121226R1001	Motorized change-over switch	26
OTM400E3C8D230C	1SCA101061R1001	Automatic transfer switch	34
OTM400E3CM110V	1SCA022847R1550	Motorized change-over switch	28
OTM400E3CM230C	1SCA022847R1630	Motorized change-over switch	26
OTM400E3CM24D	1SCA022847R1390	Motorized change-over switch	30
OTM400E3CM48D	1SCA022847R1470	Motorized change-over switch	29
OTM400E4C2D230C	1SCA101060R1001	Automatic transfer switch	33
OTM400E4C3D230C	1SCA106318R1001	Automatic transfer switch	33
OTM400E4C8D230C	1SCA101064R1001	Automatic transfer switch	34
OTM400E4CM110V	1SCA022847R3170	Motorized change-over switch	28
OTM400E4CM230C	1SCA022847R3250	Motorized change-over switch	26
OTM400E4CM24D	1SCA022847R2950	Motorized change-over switch	30
OTM400E4CM48D	1SCA022847R3090	Motorized change-over switch	29
OTM40F3CMA230V	1SCA120096R1001	Motorized change-over switch	25
OTM40F4CMA230V	1SCA120102R1001	Motorized change-over switch	25
OTM630E2CM230V	1SCA121268R1001	Motorized change-over switch	27
OTM630E3C8D230C	1SCA108452R1001	Automatic transfer switch	34
OTM630E3CM110V	1SCA022873R1050	Motorized change-over switch	28
OTM630E3CM230C	1SCA103567R1001	Motorized change-over switch	27
OTM630E3CM24D	1SCA022873R1210	Motorized change-over switch	30
OTM630E3CM48D	1SCA022873R1300	Motorized change-over switch	29
OTM630E4C2D230C	1SCA108434R1001	Automatic transfer switch	33
OTM630E4C3D230C	1SCA108726R1001	Automatic transfer switch	33
OTM630E4C8D230C	1SCA108453R1001	Automatic transfer switch	34
OTM630E4CM110V	1SCA022873R1810	Motorized change-over switch	28
OTM630E4CM230C	1SCA022873R1990	Motorized change-over switch	27
OTM630E4CM24D	1SCA022873R2020	Motorized change-over switch	30
OTM630E4CM48D	1SCA022873R2110	Motorized change-over switch	29
OTM63F3CMA230V	1SCA120095R1001	Motorized change-over switch	25
OTM63F4CMA230V	1SCA120101R1001	Motorized change-over switch	25
OTM800E2CM230V	1SCA121270R1001	Motorized change-over switch	27
OTM800E3C8D230C	1SCA108454R1001	Automatic transfer switch	34
OTM800E3CM110V	1SCA022872R5750	Motorized change-over switch	28
OTM800E3CM230C	1SCA103570R1001	Motorized change-over switch	27
OTM800E3CM24D	1SCA022872R5910	Motorized change-over switch	30
OTM800E3CM48D	1SCA022872R6050	Motorized change-over switch	29
OTM800E4C2D230C	1SCA108439R1001	Automatic transfer switch	33
OTM800E4C3D230C	1SCA108728R1001	Automatic transfer switch	33
OTM800E4C8D230C	1SCA108455R1001	Automatic transfer switch	34
OTM800E4CM110V	1SCA022872R8260	Motorized change-over switch	28
OTM800E4CM230C	1SCA022872R8340	Motorized change-over switch	27
OTM800E4CM24D	1SCA022872R8420	Motorized change-over switch	30
OTM800E4CM48D	1SCA022872R8510	Motorized change-over switch	29
OTM80F3CMA230V	1SCA120093R1001	Motorized change-over switch	25
OTM80F4CMA230V	1SCA120100R1001	Motorized change-over switch	25
OTPS125FP	1SCA105099R1001	Fourth pole	48
OTPS40FPN1	1SCA105001R1001	Fourth pole	48
OTPS40FPN2	1SCA105000R1001	Fourth pole	48
OTPS60FP	1SCA111009R1001	Fourth pole	48
OTPS80FP	1SCA105461R1001	Fourth pole	48
OTS125T1	1SCA022379R9760	Terminal shroud	49
OTS125T3	1SCA022379R9680	Terminal shroud	49
OTS1600G1L/3	1SCA022871R9510	Terminal shroud	49
OTS1600G1L/4	1SCA022871R9780	Terminal shroud	49
OTS1600G1S/3	1SCA022871R9600	Terminal shroud	49
OTS1600G1S/4	1SCA022871R9860	Terminal shroud	49
OTS2500G1L/3	1SCA107261R1001	Terminal shroud	49
OTS2500G1L/4	1SCA107262R1001	Terminal shroud	49
OTS2500G1S/3	1SCA107260R1001	Terminal shroud	49
OTS2500G1S/4	1SCA107271R1001	Terminal shroud	49
OTS250G1L/3	1SCA022731R8150	Terminal shroud	49
OTS250G1L/4	1SCA022731R8230	Terminal shroud	49
OTS250G1S/3	1SCA022731R8310	Terminal shroud	49
OTS250G1S/4	1SCA022731R8400	Terminal shroud	49
OTS400G1L/3	1SCA022736R8840	Terminal shroud	49
OTS400G1L/4	1SCA022736R9490	Terminal shroud	49
OTS400G1S/3	1SCA022736R9060	Terminal shroud	49
OTS400G1S/4	1SCA022736R9650	Terminal shroud	49
OTS40T1	1SCA105314R1001	Terminal shroud	49
OTS40T3	1SCA105317R1001	Terminal shroud	49

Type	Order number	Description	Page
OTS63T1	1SCA022353R6910	Terminal shroud	49
OTS63T3	1SCA022353R6750	Terminal shroud	49
OTS800G1L/3	1SCA022776R7890	Terminal shroud	49
OTS800G1L/4	1SCA022776R7970	Terminal shroud	49
OTS800G1S/3	1SCA022776R8190	Terminal shroud	49
OTS800G1S/4	1SCA022776R8270	Terminal shroud	49
OTV1000ECK	1SCA107481R1001	Handle	44
OTV1000ECLK	1SCA113152R1001	Handle	44
OTV1000ECMK	1SCA111301R1001	Handle	44
OTV250ECFK	1SCA113141R1001	Handle	44
OTV250ECK	1SCA022783R0090	Handle	44
OTV250ECLK	1SCA113137R1001	Handle	44
OTV250ECMK	1SCA022804R0570	Handle	44
OTV400ECFK	1SCA113147R1001	Handle	44
OTV400ECK	1SCA022783R0170	Handle	44
OTV400ECLK	1SCA113143R1001	Handle	44
OTV400ECMK	1SCA022843R2900	Handle	44
OTV800ECFK	1SCA113151R1001	Handle	44
OTV800ECK	1SCA022797R2470	Handle	44
OTV800ECLK	1SCA113148R1001	Handle	44
OTV800ECMK	1SCA022804R3410	Handle	44
OTVS0	1SCA117524R1001	Handle and spare fuse storage clip	44
OTVS1	1SCA111413R1001	Handle and spare fuse storage clip	44
OTVS2	1SCA111414R1001	Handle and spare fuse storage clip	44
OTZC13	1SCA022767R6910	Bridging bar	56
OTZC14	1SCA022767R7040	Bridging bar	56
OTZC23	1SCA022767R7120	Bridging bar	56
OTZC24	1SCA022767R7210	Bridging bar	56
OTZC33	1SCA022785R7020	Bridging bar	56
OTZC34	1SCA022785R7110	Bridging bar	56
OTZC43	1SCA022868R0710	Bridging bar	56
OTZC44	1SCA022868R0800	Bridging bar	56
OTZC53	1SCA022868R0980	Bridging bar	56
OTZC54	1SCA022868R1010	Bridging bar	56
OTZC63	1SCA022868R1100	Bridging bar	56
OTZC64	1SCA022868R1360	Bridging bar	56
OTZR1	1SCA100352R1001	Reversing bar	56
OTZR2	1SCA104647R1001	Reversing bar	56
OTZR3	1SCA100355R1001	Reversing bar	56
OTZW17	1SCA022387R1620	Conversion kit	53
OTZW25	1SCA022778R6920	Conversion kit	53
OTZW26	1SCA022778R7060	Conversion kit	53
OWC6D125	1SCA104494R1001	Conversion kit	53
OWC6D40	1SCA022865R4550	Conversion kit	53
OWC6D80	1SCA022865R4630	Conversion kit	53
OXP12X107	1SCA022029R9750	Shaft	46
OXP12X148	1SCA022658R5570	Shaft	46
OXP12X166	1SCA022325R7100	Shaft	46
OXP12X185	1SCA022325R6710	Shaft	46
OXP12X250	1SCA022325R6980	Shaft	46
OXP12X280	1SCA022137R5140	Shaft	46
OXP12X325	1SCA022042R5810	Shaft	46
OXP12X395	1SCA022042R5990	Shaft	46
OXP12X465	1SCA022042R6020	Shaft	46
OXP6X130	1SCA022057R0570	Shaft	45
OXP6X150	1SCA022295R5600	Shaft	45
OXP6X161	1SCA022067R1760	Shaft	45
OXP6X170	1SCA108224R1001	Shaft	45
OXP6X210	1SCA022295R6080	Shaft	45
OXP6X265	1SCA108225R1001	Shaft	45
OXP6X290	1SCA022042R6370	Shaft	45
OXP6X360	1SCA022042R6530	Shaft	45
OXP6X400	1SCA108226R1001	Shaft	45
OXP6X90	1SCA022064R1180	Shaft	45
OXS6X105	1SCA108043R1001	Shaft	45
OXS6X120	1SCA101654R1001	Shaft	45
OXS6X130	1SCA101655R1001	Shaft	45
OXS6X85	1SCA101647R1001	Shaft	45
OZXA32	1SCA022683R4110	Parallel connection kit	55
OZXA33	1SCA022685R0310	Parallel connection kit	55
OZXA38	1SCA022785R2140	Parallel connection kit	55
OZXA39	1SCA022790R3820	Parallel connection kit	55
OZXA40	1SCA022790R3910	Parallel connection kit	55
OZXA41	1SCA022790R4040	Parallel connection kit	55
OZXB1L	1SCA022169R2030	Terminal clamp	51
OZXB1L/1	1SCA022194R0030	Terminal clamp	51
OZXB2	1SCA022119R7610	Terminal clamp	51
OZXB2/1	1SCA022194R0200	Terminal clamp	51
OZXB2K	1SCA022264R0010	Terminal shroud	50
OZXB2L	1SCA022158R7750	Terminal clamp	51
OZXB2L/1	1SCA022194R0460	Terminal clamp	51
OZXB3	1SCA022136R8100	Terminal clamp	51
OZXB3	1SCA022136R8100	Terminal clamp	52
OZXB3/1	1SCA022194R0620	Terminal clamp	51
OZXB3/1	1SCA022194R0620	Terminal clamp	52
OZXB3K	1SCA022264R0440	Terminal shroud	50
OZXB4	1SCA022137R4760	Terminal clamp	51
OZXB4	1SCA022137R4760	Terminal clamp	52
OZXB4/1	1SCA022194R0890	Terminal clamp	51
OZXB4/1	1SCA022194R0890	Terminal clamp	52
OZXB4K	1SCA022199R2850	Terminal shroud	50
OZXB5	1SCA022137R2470	Terminal clamp	52
OZXB5/1	1SCA022194R1010	Terminal clamp	52
OZXB5K	1SCA022283R8040	Terminal shroud	50
OZXB6	1SCA022137R4920	Terminal clamp	52
OZXB6/1	1SCA022194R1270	Terminal clamp	52
OZXB7	1SCA022185R0040	Terminal clamp	51
OZXB7/1	1SCA022194R1430	Terminal clamp	51
OZXB7L	1SCA022185R7130	Terminal clamp	51
OZXB7L	1SCA022185R7130	Terminal clamp	52
OZXB7L/1	1SCA022194R1600	Terminal clamp	51
OZXB7L/1	1SCA022194R1600	Terminal clamp	52
OZXB8	1SCA022744R1510	Terminal clamp	51
OZXB8/1	1SCA022744R1600	Terminal clamp	51
OZXB9	1SCA022750R3210	Terminal clamp	51
OZXB9/1	1SCA022750R3300	Terminal clamp	51
OZXL1	1SCA022439R6770	Terminal clamp	51
OZXT1	1SCA022469R6310	Terminal clamp	51
OZXT2	1SCA022620R7200	Terminal clamp	51
OZXT3	1SCA022639R0720	Terminal clamp	51
OZXT6	1SCA122537R1001	Terminal clamp	51
PB100 low	1SDA054971R1	Phase barrier	50
PB100 low	1SDA054970R1	Phase barrier	50
PB200 high	1SDA054972R1	Phase barrier	50
PB200 high	1SDA054973R1	Phase barrier	50
YASDA21	1SCA022098R9420	Handle	43
YASDA6	1SCA022071R2890	Handle	43

Contact us

ABB Oy
Breakers and Switches
P.O. Box 622
FI-65101 Vaasa, Finland
Phone: +358 10 22 11
Fax: +358 10 22 45708
E-Mail: firstname.surname@fi.abb.com

www.abb.com

The technical data and dimensions are valid at the time of printing. We reserve the right to subsequent alterations.

Producted by A&V Insinöörit Oy / Tekninen viestintä, Vaasa, Finland
Catalogue OTC1GB 12-01, 1SCC303003C0201

Power and productivity
for a better world™