KQ1000

Continuous level sensor

KQ-5xxxNFPKG/IO

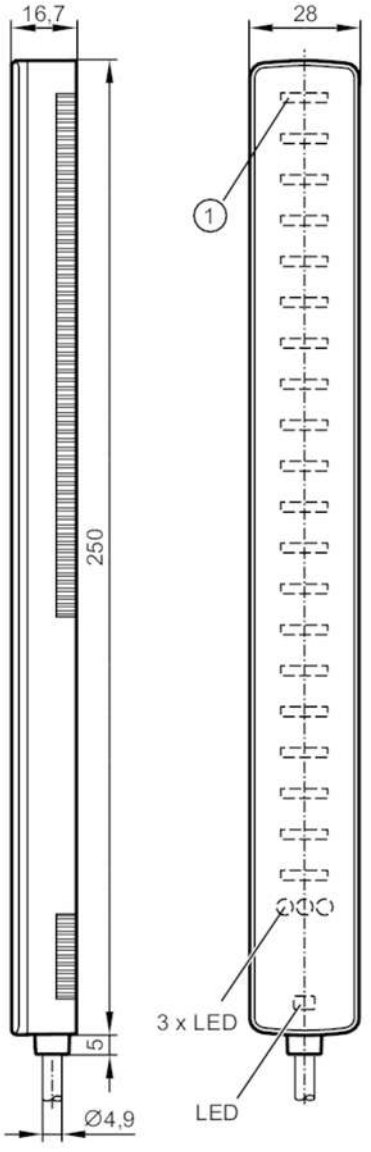

1 LED bar graph

Product characteristics		
Electrical design		PNP/NPN; (parameterisable)
Communication interface		IO-Link
Dimensions	[mm]	250 x 28 x 16.7
Application		
Application		Continuous level measurement behind non-metallic and non-conductive surfaces
Media		dry bulk material; aqueous solutions; oils
Cannot be used for		highly adhesive media

KQ1000

Continuous level sensor

KQ-5xxxNFPKG/IO

Electrical data		
Operating voltage	[V]	10...30 DC; (IO-Link: 18...30 DC)
Current consumption	[mA]	< 50
Protection class		III
Reverse polarity protection		yes
Max. power-on delay time	[ms]	1300
Measuring principle		capacitive
Inputs / outputs		
Number of inputs and outputs		Number of digital outputs: 3
Outputs		
Electrical design		PNP/NPN; (parameterisable)
Number of digital outputs		3
Permanent current rating of switching output DC	[mA]	200
Max. resistance switching output	[Ω]	8
Short-circuit protection		yes
Type of short-circuit protection		pulsed
Overload protection		yes
Detection zone		
Measuring range	[mm]	< 200
Measuring/setting range		
Detection range	[mm]	228
Set point SP	[%]	5...95
Reset point rP	[%]	4...94
In steps of	[%]	1
Accuracy / deviations		
Repeatability	[% of the final value]	2
Offset deviation	[% of the final value]	4
Resolution	[% of the final value]	1
Linearity deviation	[% of the final value]	1
Response times		
Response time	[ms]	1300
Interfaces		
Communication interface		IO-Link
Transmission type		COM2 (38,4 kBaud)
IO-Link revision		1.1
SDCI standard		IEC 61131-9
Profiles		Digital Measuring Sensor Profile, Common Profile
SIO mode		yes

KQ1000

Continuous level sensor

KQ-5xxxNFPKG/IO

Required master port type		A	
Process data analogue		1	
Process data binary		3	
Min. process cycle time	[ms]	9.6	
IO-Link process data (cyclical)		function	bit length
		process value	16
		exponent	8
		device status	4
		binary switching information	3
IO-Link functions (acyclical)		direction of installation; limitation of sensor elements; sensitivity; minimum recognition threshold; Performance in case of a fault; error delay; Damping; LED mode; switch-on cycle counter; operating hours counter; switching cycles counter; min./max. process value; internal temperature; min./max. internal temperature; diagnostic data for level	
Supported DeviceIDs		Type of operation	DeviceID
		Default	924
Note		For further information please see the IODD PDF file under "Downloads"	

Operating conditions

Applications		DIN EN 60654-1 application class B2	
Ambient temperature	[°C]	-20...80	
Storage temperature	[°C]	-25...85	
Protection		IP 65	

Tests / approvals

EMC		DIN EN 61000-6-4 30 - 230 MHz	40 dBµV/m QP / 10 m distance
		230 - 1 GHz	47 dBµV/m QP / 10 m distance
		DIN EN 61000-4-2	± 25 kV AD / ± 25 kV CD
		DIN EN 61000-4-3	80 MHz - / 1 GHz 10 V/m
		DIN EN 61000-4-4	± 2.5 kV / 5 kHz
			± 2.5 kV / 100 kHz
		DIN EN 61000-4-6	10 V
Shock resistance		EN 60068-2-27	15 g 11 ms
Vibration resistance		EN 60068-2-6	5 g (10...2000 Hz)
MTTF	[years]	290.43	
UL approval		Ta	-25...60 °C
		Enclosure type	Type 1
		power supply	Limited Voltage/Current
		UL Approval no.	D005
		File number UL	E174191

Mechanical data

Weight	[g]	432	
Dimensions	[mm]	250 x 28 x 16.7	
Materials		PBT; PC;	

Displays / operating elements

Display		operation	1 x LED, green
		switching status	3 x LED, yellow
		function	20 x LED, green

Accessories

Items supplied		adhesive tape: 1 x 1,2 x 23 x 240 mm	

KQ1000

Continuous level sensor

KQ-5xxxNFPKG/IO

Accessories (optional)	Mounting adapter: 2, E12675
	Mounting adapter: 2, E12676
	Fixing strap: 5, E10880
	adhesive tape: 10, E12677

Remarks

Remarks	when used on IO-Link class B masters switching outputs OUT2, OUT3 have to be switched off
Pack quantity	1 pcs.

Electrical connection

Cable: 2 m, PUR; 5 x 0.34 mm²

Connection

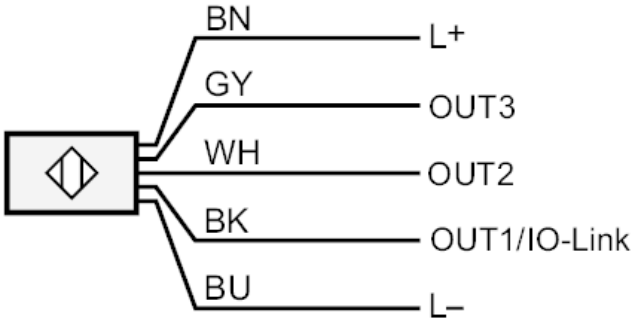

	Core colours
BN	brown
GY	grey switching output 3
WH	white switching output 2
BK	black switching output 1 / IO-Link
BU	blue