E20995

Mounting set for reflectors

SYSTEM COMPONENT REFLECTOR

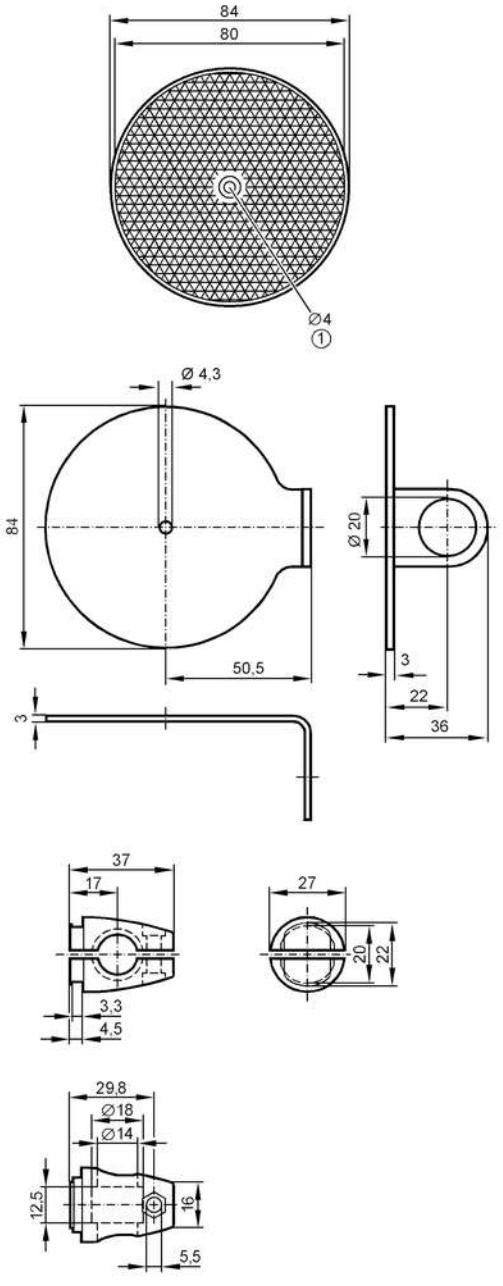

1 screw head Ø 7.5 mm

Application		
Design		clamp mounting, for reflector
Mechanical data		
Weight	[g]	422.5
Type of mounting		free-standing; (M12)
Materials		fixture: stainless steel (1.4571/316Ti); Clamp: diecast zinc
Accessories		
Items supplied		screw: 1 x M12 x 120
Remarks		
Pack quantity		1 pcs.