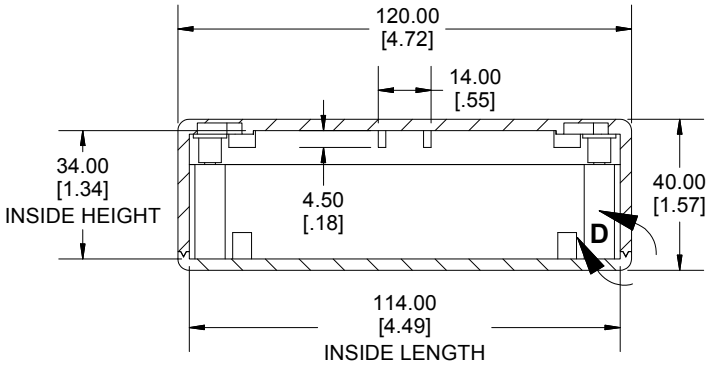

SECTION A-A
SIDE VIEW

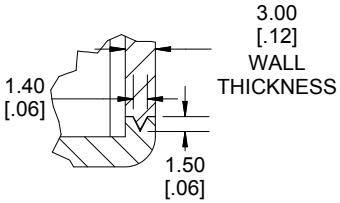

DETAIL D
GROOVE



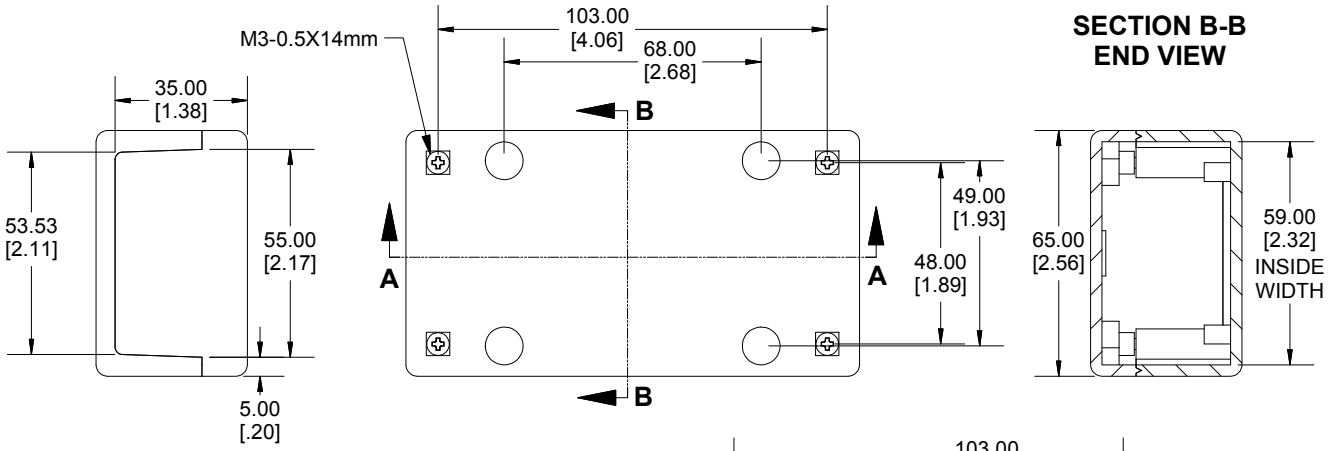

SECTION B-B
END VIEW

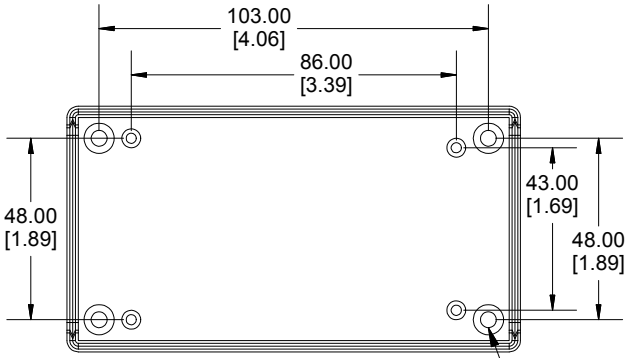

LID

INTEGRATED
BRASS INSERTS

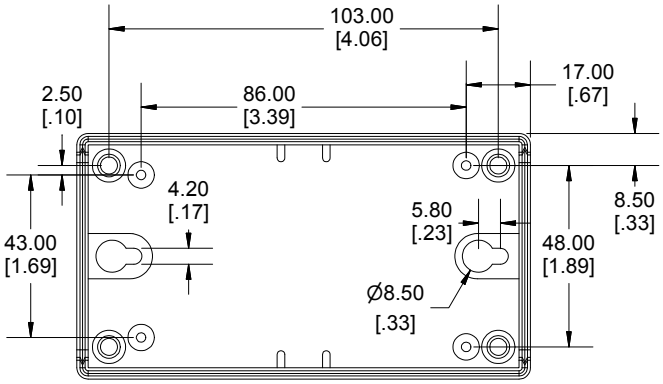

BOX

Enclosures can be Factory Modified (Milling, Drilling, Printing etc.)
Contact Factory mjm@hammondmfg.com for quotes
Solid models of this enclosure available in STEP or IGES.

NOTE
Purchased assembly includes box, lid,4 cover screws, and 4 P.C. board screws.
Recommended Cover Screw Torque -- 2.5 lbf-in (30 cN-m)

MB1265	
MB1265 RegularEnclosure	
Lid smooth light gray (RAL 7035)	MB126540
Bottom smooth dark gray (RAL 7012)	

Dimensions:
mm
[inches]

HAMMOND MANUFACTURING™

MB126540

www.hammondmfg.com