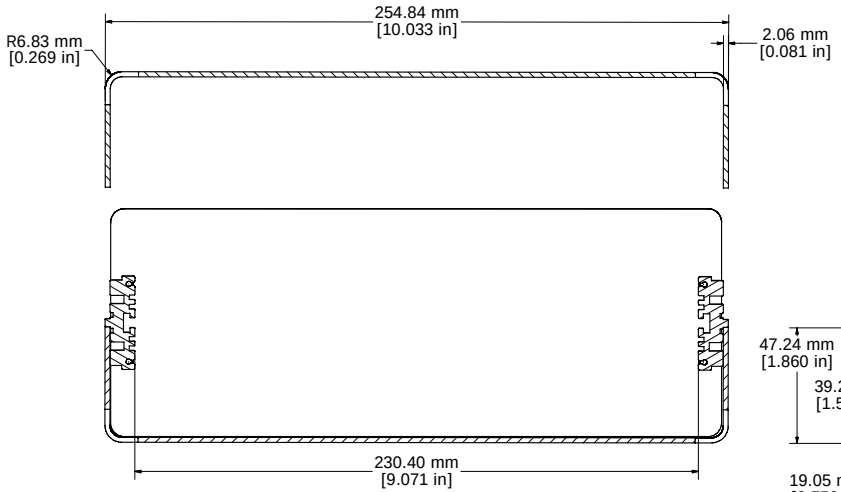

SECTION AA-AA

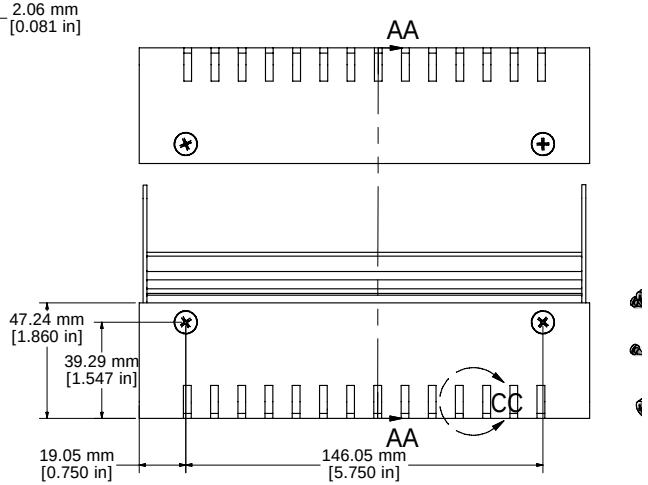

ASSEMBLY - VIEW FROM SIDE (OPEN)

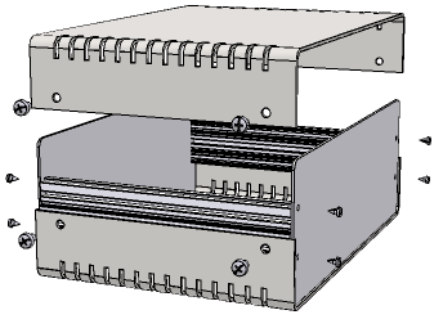

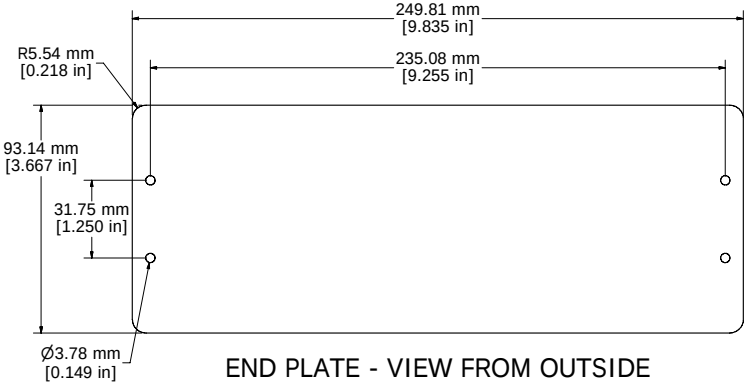

END PLATE - VIEW FROM OUTSIDE

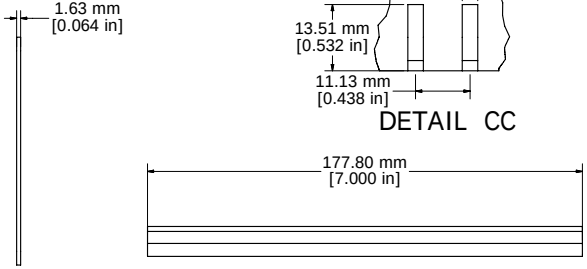

DETAIL CC

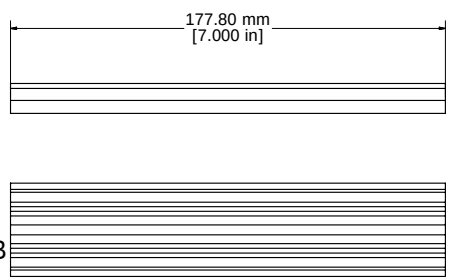

EXTRUSION - VIEW FROM INSIDE

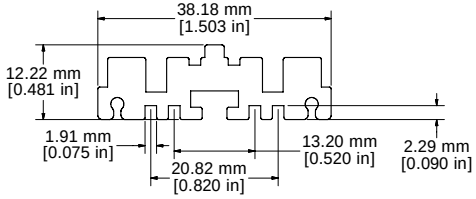

DETAIL BB

- 12 GAUGE ALUMINUM BODY PAINTED (RAL 7032)
- EIGHT 6-32 NICKEL PLATED SCREWS
EIGHT 4-24 x 1/4" SELF-TAPPING SCREWS
- 0.064" THICK ALUMINUM PANELS (NATURAL ALUMINUM)
- FOUR SELF ADHESIVE RUBBER FEET
EXTRA SCREWS - 1421J6 (6-32 x 1/4 SHEET METAL SCREWS)

Contact Factory mjm@hammondmfg.com for quotes
Enclosures can be Factory Modified (Milling, Drilling, Printing etc.)
Solid models of this enclosure available in STEP or IGES.

HAMMOND MANUFACTURING™

1402HV

www.hammondmfg.com