OMRON

Miniature Rocker Switch | A8L

Rocker Switch for High Current Switching

- Withstands inrush currents up to 100 A due to a unique switching mechanism.
- Soft touch with firm switching action.
- Easy to mount by snap fitting.
- Contact gap of 3 mm minimum.
- UL and cUL standards approved. Conforms to EN standards.



Ordering Information

Color of caps and cases (flanges)	Marking on caps	SPST					DPST 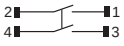				
		Solder terminals	PCB terminals	Right-angled PCB terminals	Left-angled PCB terminals	Quick-connect terminals #187	Solder terminals	PCB terminals	Right-angled PCB terminals	Left-angled PCB terminals	Quick-connect terminals #187
Black	Without markings	A8L-11-11N1	A8L-11-12N1	A8L-11-13N1	A8L-11-14N1	A8L-11-15N1	A8L-21-11N1	A8L-21-12N1	A8L-21-13N1	A8L-21-14N1	A8L-21-15N1
		A8L-11-11N2	A8L-11-12N2	A8L-11-13N2	A8L-11-14N2	A8L-11-15N2	A8L-21-11N2	A8L-21-12N2	A8L-21-13N2	A8L-21-14N2	A8L-21-15N2

Specifications

■ Ratings

Rated load	Non-inductive		Inductive	
	Resistive load	Lamp load	Inductive load	Inductive motor load
125 VAC	10 A	10 A	8 A	8 A
250 VAC	10 A	10 A	8 A	8 A

Note: **1.** The non-inductive lamp load has an impulse current ten times the normal current.

2. The inductive load has a power factor of 0.4 minimum (AC).

3. The motor load has an impulse current 6 times the normal current.

The above ratings were tested under the following conditions:

1. Ambient temperature:20±2°C
2. Ambient humidity:65%±5%
3. Switching frequency:7 times/min

■ Characteristics

Permissible operating frequency	Mechanical: 20 operations/min max. Electrical: 7 operations/min max.
Insulation resistance	100 MΩ min. (500 VDC)
Dielectric strength	2,000 VAC, 50/60 Hz, for 1 min between terminals of the same polarity 2,000 VAC, 50/60 Hz, for 1 min between terminals of the different polarity 4,000 VAC, 50/60 Hz, for 1 min between charged metal parts and the ground terminal
Vibration resistance	Malfunction:10 to 55 Hz, 1.5-mm double amplitude (malfunction time of 1 ms max.)
Shock resistance	Malfunction: 300 m/s^2 (malfunction time of 1 ms max.) Destruction: 500 m/s^2
Life expectancy	Mechanical: 50,000 operations min. Electrical: 10,000 operations min.
Inrush current	100 A max. (8.3 ms max.)
Ambient temperature	Operating: –20 to 55°C (with no icing or condensation) Storage: –25 to 60°C (with no icing or condensation)
Ambient humidity	Operating: 45% to 85% Storage: 45% to 85%

Note: Consult your OMRON representative for details of performance characteristics with respect to individual standards.

■ Approved Safety Standards

UL, cUL (File No. E41515)	10 A, 125 VAC; 10 A, 250 VAC
EN61058-1 (TÜV certificate no. J50021820)	10 (8) A, 250 V~

Dimensions

Note: All units are in millimeters unless otherwise indicated.

Solder Terminals

A8L-11-11N1
A8L-11-11N2
A8L-21-11N1
A8L-21-11N2

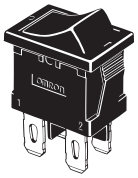

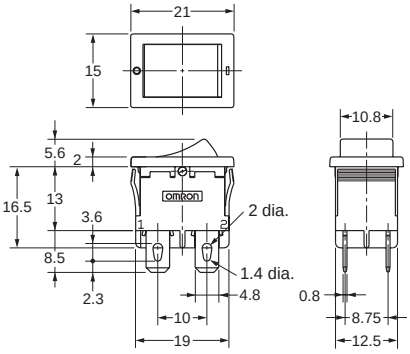

■ Operating Characteristics

No. of poles	1	2
OF (operating force)	2.16±1.18 N	3.92±2.45 N

PCB Terminals

A8L-11-12N1
A8L-11-12N2
A8L-21-12N1
A8L-21-12N2

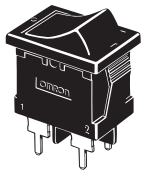

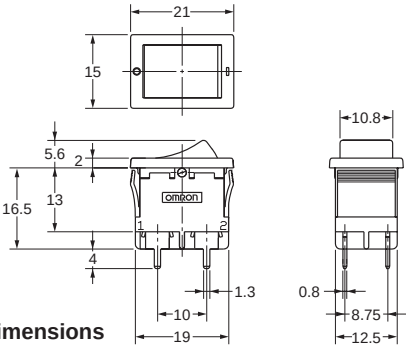

PCB Cutout Dimensions (Bottom View)

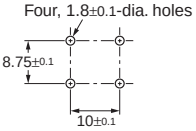

■ Operating Characteristics

No. of poles	1	2
OF (operating force)	2.16±1.18 N	3.92±2.45 N

Right-angled PCB Terminals

A8L-11-13N1
A8L-11-13N2
A8L-21-13N1
A8L-21-13N2

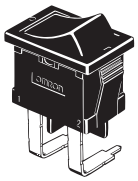

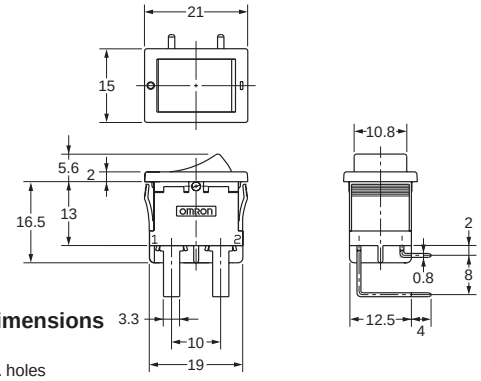

PCB Cutout Dimensions (Bottom View)

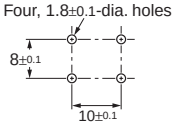

■ Operating Characteristics

No. of poles	1	2
OF (operating force)	2.16±1.18 N	3.92±2.45 N

Left-angled PCB Terminals

A8L-11-14N1
A8L-11-14N2
A8L-21-14N1
A8L-21-14N2

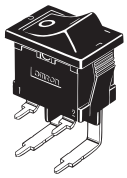

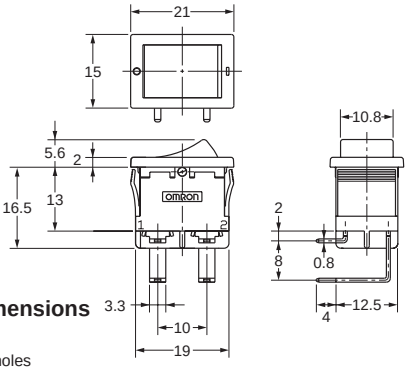

PCB Cutout Dimensions (Bottom View)

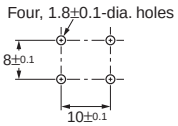

■ Operating Characteristics

No. of poles	1	2
OF (operating force)	2.16±1.18 N	3.92±2.45 N

Quick-connect Terminals #187

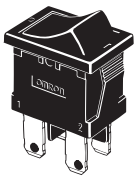

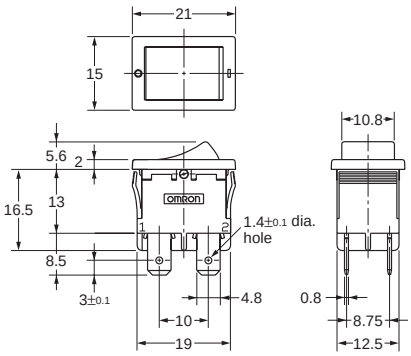

■ Operating Characteristics

No. of poles	1	2
OF (operating force)	2.16±1.18 N	3.92±2.45 N

■ Panel Cutout

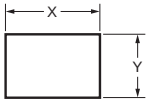

Panel thickness (mm)	X (mm)	Y (mm)
0.75 to 1.25	$19.2^{\ 0}_{-0.1}$	$12.9^{+0.1}_{\ 0}$
1.26 to 2.5	$19.4^{+0.1}_{-0.3}$	$12.9^{+0.1}_{\ 0}$

Note: Recommended panel material: SPCC

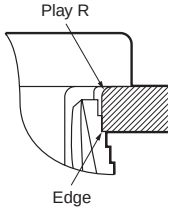

Be sure that play R is the operation side.

Panel Cutout for Angled PCB Terminals

(A8L-□□-□3□□, A8L-□□-□4□□)

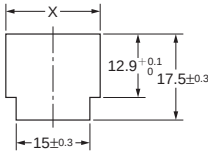

Panel thickness (mm)	X (mm)
0.75 to 1.25	$19.2^{\ 0}_{-0.1}$
1.26 to 2.5	$19.4^{+0.1}_{-0.3}$

Precautions

⚠ Caution

Do not wire the Switch or touch any terminal of the Switch while power is being supplied. Doing so may result in electric shock.

To increase the reliability of operation, test the Switch before actual operation.

Be sure that there is an enough insulation distance between any Switch terminal and metal part.

Mounting

Turn OFF the power supply before mounting, removing or wiring the Switch, or before performing maintenance inspections. Failure to do so may result in electric shock.

Do not use panels other than ones with the designated thickness and dimensions. Remove all burrs from the cutout before installing the Switch. Otherwise, the Switch may malfunction.

Do not impose excessive force on the Switch at the time of panel-mounting.

There are two small divots in the flange part of the case marking ON and OFF as shown in the following diagram. Use these marks as guides when mounting.

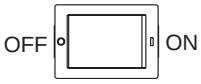

Wiring

When soldering terminals manually, perform soldering within 3 s using a 60-W soldering iron (temperature at the tip of the soldering iron: 420°C max.). Do not apply excessive force to the terminals during soldering.

When soldering using a soldering tub, perform soldering within 5 s in a soldering fluid at 270°C, or within 3 s in a soldering fluid at 350°C.

Be sure that the wires are thick enough for the load (current) to be applied.

The performance of the Switch may be affected if the Switch is used for switching micro loads. Test the Switch under the actual operating conditions.

Only A8L-□□-□5□□ models are equipped with (6.3×0.8) mm flat-quick connections for use with #187 fasten receptacles.

The terminals of A8L-□□-□1□□ are not in compliance with IEC standards for flat-quick connections. Suitable for use as solder connection only.

Operating Environment

Do not use the Switch in places with sulfide gas, corrosive gas, sea breeze, oil spray, or direct sunlight. Otherwise, the Switch may malfunction.

Do not use the Switch in places that are visibly dusty. Otherwise, the contacts may fail to operate correctly.

Handling

Do not drop the Switch. Otherwise, the Switch may malfunction.

Do not impose excessive force on the Switch. Otherwise, the Switch may deform.

The recommended panel material is SPCC. The Switch may fall off if the material is soft and cannot securely hold the Switch. When using a soft material, test the Switch with it before using the Switch in actual operation.

ALL DIMENSIONS SHOWN ARE IN MILLIMETERS.
To convert millimeters into inches, multiply by 0.03937. To convert grams into ounces, multiply by 0.03527.

Cat. No. A114-E1-03 **In the interest of product improvement, specifications are subject to change without notice.**

OMRON Corporation

Electronic Components Company

Electronic & Mechanical Components Division H.Q.
Speciality Switch Division
Shiokoji Horikawa, Shimogyo-ku,
Kyoto, 600-8530 Japan
Tel: (81)75-344-7096/Fax: (81)75-344-7049

Printed in Japan
0403-?M (0200) (A)