MURR ELEKTRONIK
stay connected

SVS VALVE PLUG FORM A 18MM FIELD-WIREABLE

230V LED+VDR PG9

Art.No.: 7000-29181-0000000
Weight: 0.038
Country of origin: CN
Model designation: MSVS-EB4X-KS09

Form A (18 mm)
230 V AC/DC ±10%
LED and VDR
PG9
Plastic housings with good resistance against chemicals and oils.
The resistance to aggressive media should be individually tested for your application. Further details on request.

Link to Product

Illustration



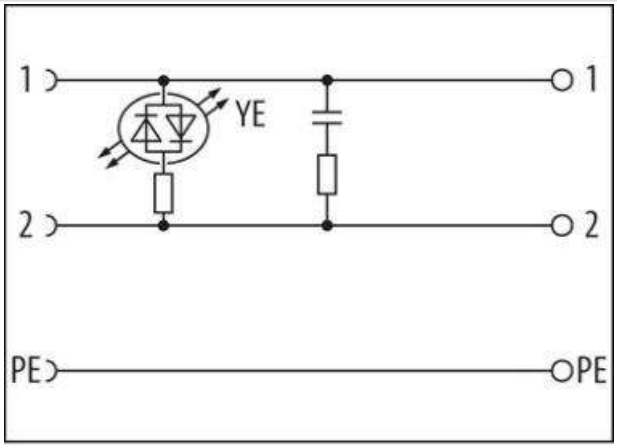

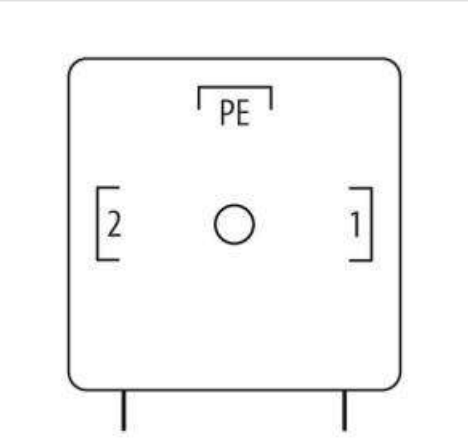

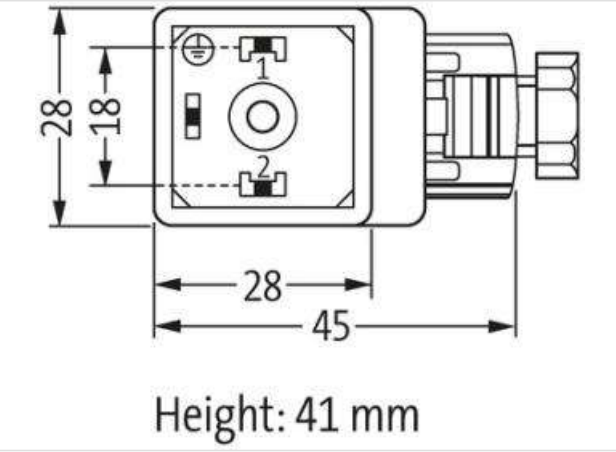

Product may differ from Image

Side 1

The information in this Product-PDF has been compiled with the utmost care.
Liability for the correctness completeness and topicality of the information is restricted to gross negligence. Version: 2025-02-16

Degree of protection (EN IEC 60529)	IP65
Commercial data	
ECLASS-6.0	27279221
ECLASS-6.1	27279221
ECLASS-7.0	27440104
ECLASS-8.0	27440104
ECLASS-9.0	27440105
ECLASS-10.1	27440105
ECLASS-11.1	27440105
ECLASS-12.0	27440105
ETIM-5.0	EC002062
customs tariff number	85366990
GTIN	4048879187541
Packaging unit	1
Electrical data | Supply	
Operating voltage AC	230 V
Operating voltage AC min.	207 V
Operating voltage AC max.	253 V
Operating voltage DC	230 V
Operating voltage DC min.	207 V
Operating voltage DC max.	253 V
Current operating per contact max.	1 A
Installation | Connection	
Tightening torque	0,4 Nm
Mounting set	M3
Installation | Pin assignment	
No. of poles	2 + PE
Device protection | Electrical	
Additional condition protection degree	inserted, screwed
Environmental characteristics | Climatic	
Operating temperature min.	-20 °C
Operating temperature max.	60 °C
Important installation notes	
Note on strain relief	Protect the connectors by suitable measures from mechanical loads, e.g. by the usage of cable ties.
Note on bending radius	**Attention:** Observe the permissible bending radii when laying cables, as the IP protection class can be endangered by excessive bending forces.

The information in this Product-PDF has been compiled with the utmost care.
Liability for the correctness completeness and topicality of the information is restricted to gross negligence. Version: 2025-02-16