Various hinges

Stainless steel hinge with removable pin

Removable pin.



Part number	Material	Finish	A	B	C	D	Weight (g)
52-1-3877	304 stainless steel	gloss	60	94.5	1.5	4	50

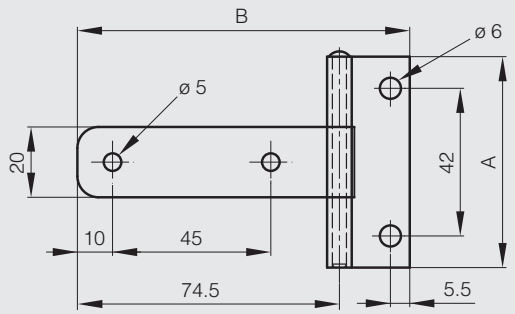

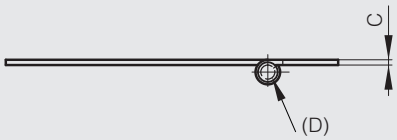

Removable pin hinges with nylon washers

Nylon washers



Part number	Material	Finish	A	B	C	D	E	S	Note	Weight (g)
50-1-3315	steel	raw	112	136.5	2.5	5	63.5		undrilled	244
52-1-3605	304 stainless steel	raw	112	136.5	2.5	5	63.5		undrilled	248
52-1-3606	304 stainless steel	raw	112	136.5	2.5	5	63.5	7	drilled	248

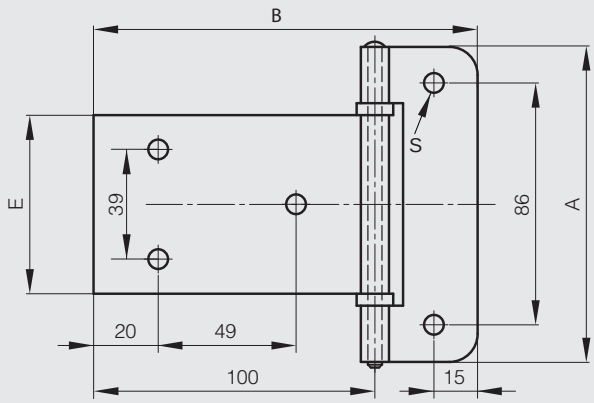

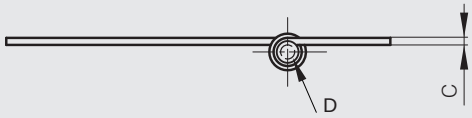

Various hinges

Hinges 62 x 74 mm



Part number	Material	Finish	A	B	C	D	Weight (g)
50-1-3308	steel	raw	62	74	2	4.9	54
52-1-3769	304 stainless steel	raw	62	74	2	4.9	54

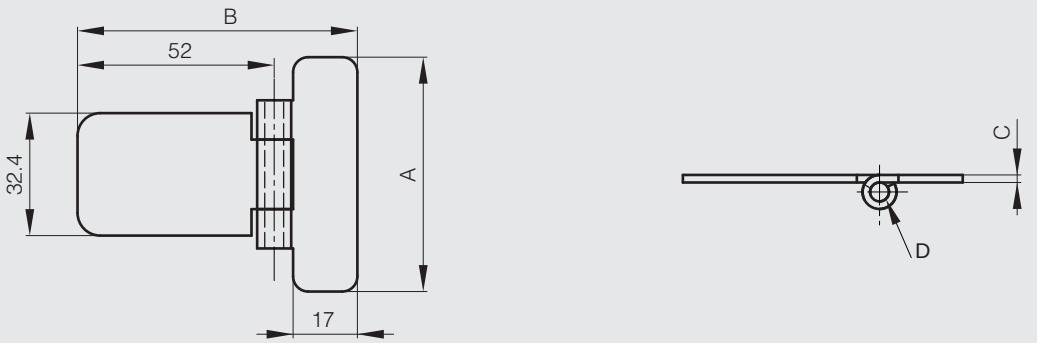

Hinge 62 x 44 mm



Part number	Material	Finish	A	B	C	D	Weight (g)
50-1-3309	steel	raw	62	44	2	4.9	48

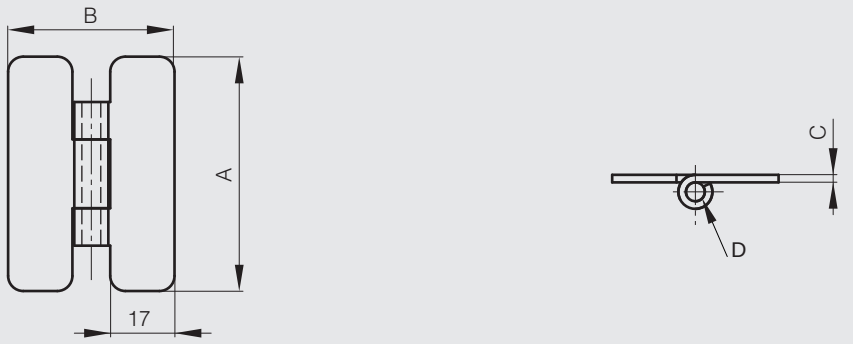

Various hinges

Tube hinge



Part number	Material	Finish	A	B	C	Note	Weight (g)
70-1-3526	steel	zinc plated	164	16.9	49	no stop	100

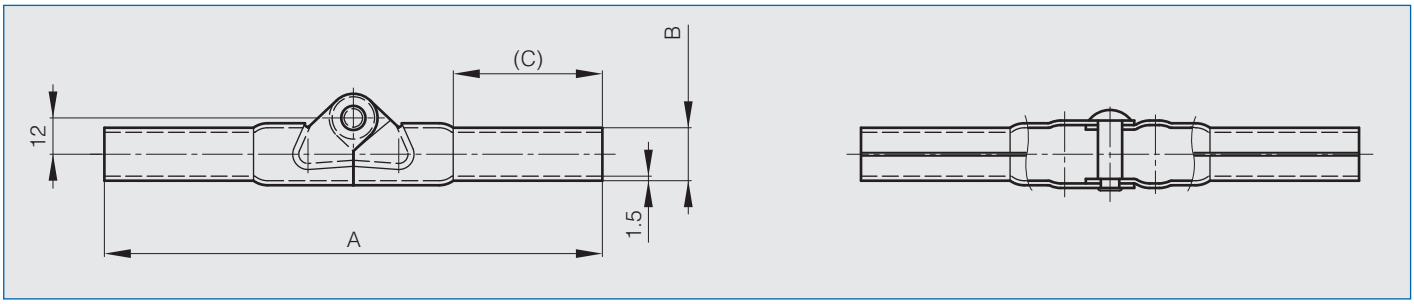

Various hinges

Glass door hinge in stainless steel

NEW!



Hinge for glass / acrylic doors (PMMA).
Door thickness : 4 - 6 mm.
Door weight : max. 4 kg / pair.
Leaves, pin and screw in 304 stainless steel. Plate in aluminium alloy, washer in chloroethylene.

Part number	Material	Finish	A	B	C	D	Weight (g)
72-7-4254	304 stainless steel	raw	34	32	1.2	5	15

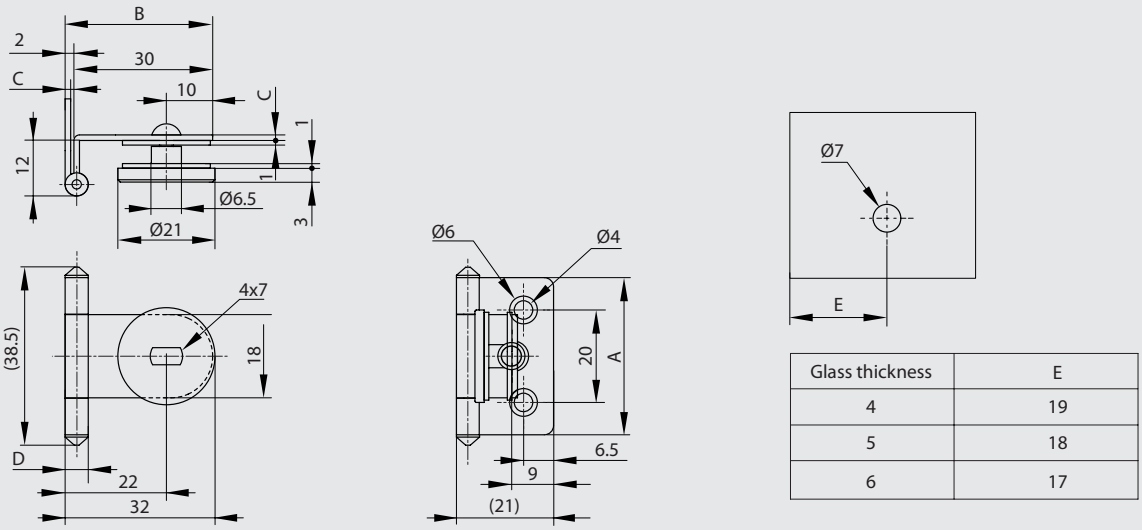

Glass thickness	E
4	19
5	18
6	17

Glass door hinge in brass



Hinge delivered in separate parts including:
- Brass hinge 25 x (30 + 18.5)
- Brass plate 25 x 30
- Countersunk screw M6 and connector in brass
- 2 countersunk screws M4 x 10 in steel
- 2 brown steel washers
- 2 M4 steel bolts.

Glass thickness: 5mm max.

Part number	Material	Finish	A	B	D	Pin material	Weight (g)
72-1-3753	brass	black zinc plated	25	48.5	4	stainless steel	53

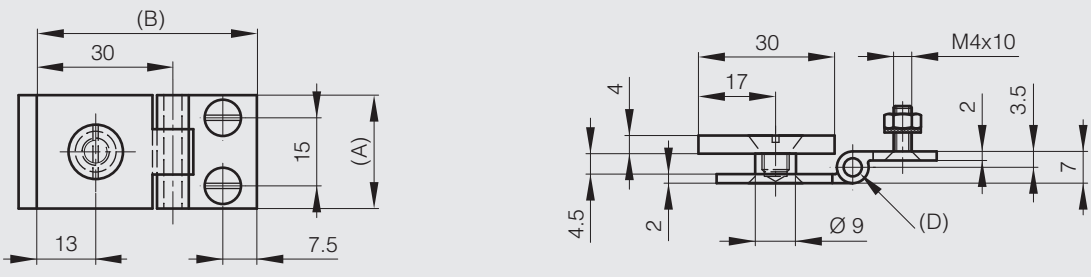

Various hinges

Brass hinge with removable pin - 3 knuckles

Removable pin in nickel plated steel.



Part number	Material	Finish	A	B	C	D	S	Weight (g)
72-7-3330	brass	chrome plated	45	7.5	10	3.9	2.5	40

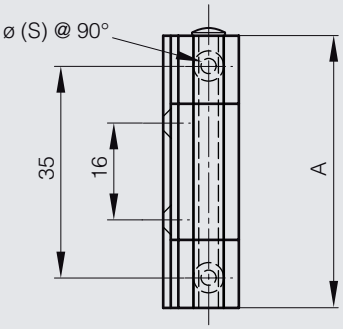

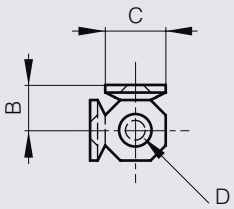

Brass hinges with removable pin - 4 knuckles

Removable pin.



Part number	Material	Finish	A	B	C	D	E	F	S	Pin material	Weight (g)
72-7-3329	brass	chrome plated	40	7.5	10	3.9	5	20	3	nickel plated steel	30
72-7-3331	brass	chrome plated	50	7.5	10	3.9	5	26.5	3	nickel plated steel	50
72-7-3332	brass	chrome plated	80	12	16	7	9.6	40	4.5	chrome plated brass	190

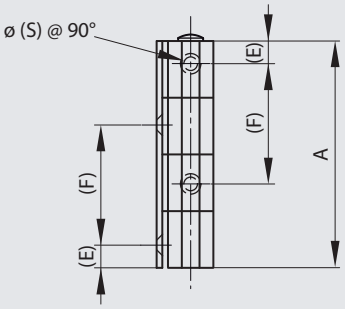

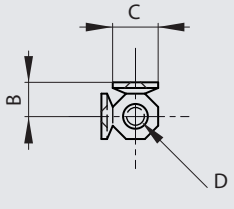

Various hinges

Large brass hinge with removable pin - 4 knuckles



Removable pin in chrome plated brass.

Part number	Material	Finish	A	B	C	D	S	Weight (g)
72-7-3333	brass	chrome plated	100	12	16	7	5	235.7

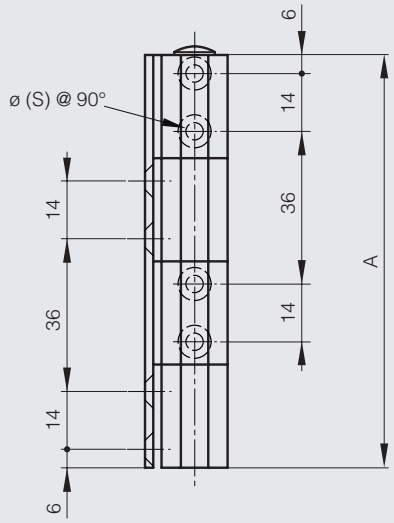

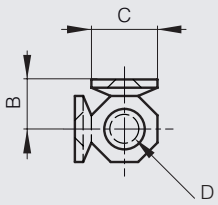

Flag hinge with washer - 62 x 62 mm



Flag hinge with brass washer.

Part number	Material	Finish	A	B	C	D	E	Note	Weight (g)
12-1-3634	steel	raw	62	62	2.5	7	30	type 2 as shown below	87
12-1-3635	steel	raw	62	62	2.5	7	30	type 1 symmetric not shown	87

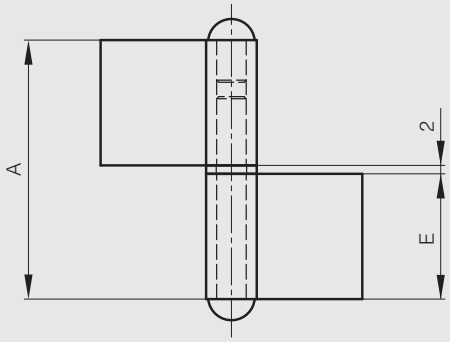

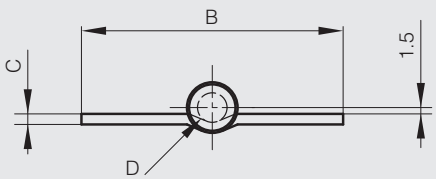

Various hinges

Flag hinge without washer with two offset leaves



Part number	Material	Finish	A	B	C	D	E	Weight (g)
12-1-3303	steel	raw	60	40	1.5	5.3	30	38
12-1-3849	steel	raw	80	40	1.5	5.3	40	51
12-1-3304	steel	raw	80	50	2	6	40	74
12-1-3769	304 stainless steel	raw	60	40	1.5	5.3	30	38
12-1-3770	304 stainless steel	raw	80	48	2	5.8	40	74

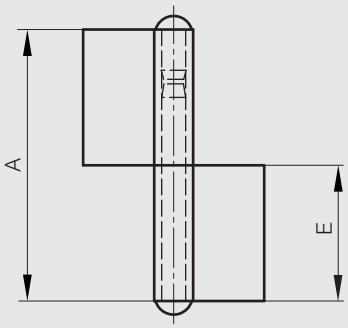

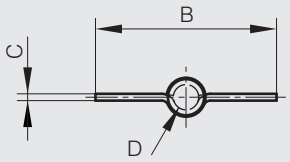

Flag hinge with washer with two offset leaves

Flag hinge with brass washer, included separately.



Part number	Material	Finish	A	B	C	D	E	Weight (g)
12-1-3305	steel	raw	61.5	40	1.5	5.3	30	39
12-1-3306	steel	raw	81.5	50	2	6	40	75
12-1-3771	304 stainless steel	raw	61.5	40	1.5	5.3	30	39
12-1-3772	304 stainless steel	raw	81.5	48	2	5.8	40	75

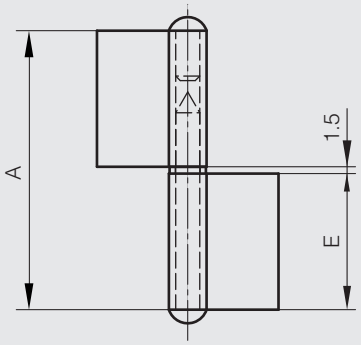

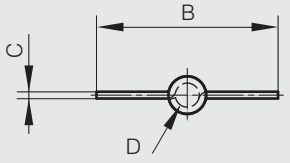

Various hinges

Flag hinge without washer - flat knuckle



Part number	Material	Finish	A	B	C	D	E	Note	Weight (g)
12-1-3307	steel	raw	60	40	1.5	5.3	30	type 2 as shown below	39
12-1-3308	steel	raw	60	40	1.5	5.3	30	type 1 symmetric not shown	39
12-1-3309	steel	raw	80	48	2	6	40	type 2 as shown below	76
12-1-3310	steel	raw	80	48	2	6	40	type 1 symmetric not shown	76

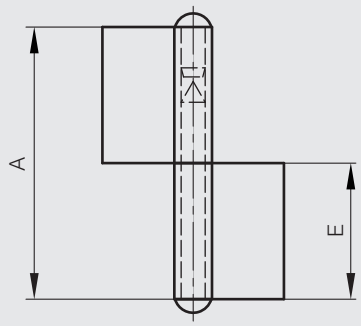

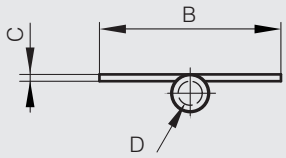

Flag hinge with washer - flat knuckle

Flag hinge with brass washer, included separately.



Part number	Material	Finish	A	B	C	D	E	Note	Weight (g)
12-1-3311	steel	raw	61.5	40	1.5	5.3	30	type 2 as shown below	40
12-1-3312	steel	raw	61.5	40	1.5	5.3	30	type 1 symmetric not shown	40
12-1-3313	steel	raw	81.5	48	2	6	40	type 2 as shown below	77
12-1-3314	steel	raw	81.5	48	2	6	40	type 1 symmetric not shown	77

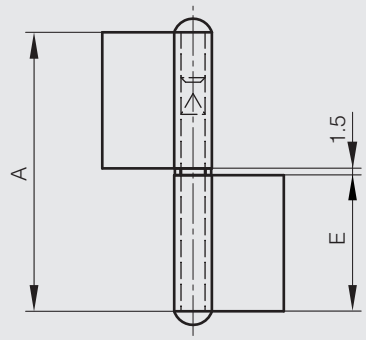

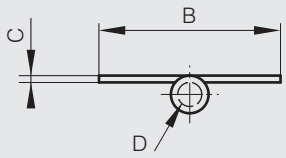

Various hinges

Flag hinge without washer with one cranked leaf



Part number	Material	Finish	A	B	C	D	E	Note	Weight (g)
12-1-3315	steel	raw	82	47	2	6	41	type 2 as shown below	77
12-1-3316	steel	raw	82	47	2	6	41	type 1 symmetric not shown	77

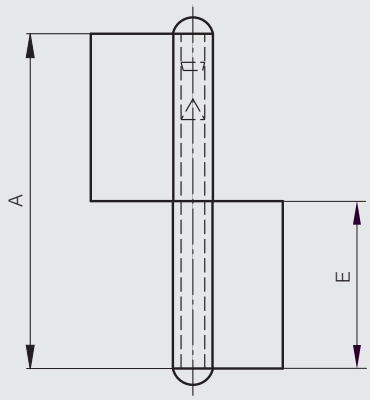

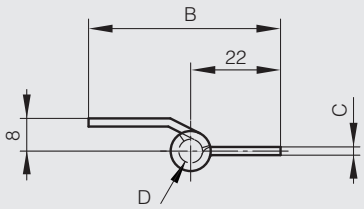

Lift-off hinges 50 x 30 mm and 60 x 40 mm

Drilled or undrilled versions.



Part number	Material	Finish	A	B	C	D	F	G	S	Note	Weight (g)
14-7-3378	steel	raw	50	30	1.2	4				type 1 symmetric not shown / undrilled	21
14-7-3379	steel	raw	50	30	1.2	4				type 2 as shown below / undrilled	21
14-7-3380	steel	raw	60	40	1.5	4				type 1 symmetric not shown / undrilled	36
14-7-3381	steel	raw	60	40	1.5	4				type 2 as shown below / undrilled	36
14-7-3394	steel	nickel plated	50	30	1.3	4	6	34	3.6	type 1 symmetric not shown / drilled	20
14-7-3395	steel	nickel plated	50	30	1.3	4	6	34	3.6	type 2 as shown below / drilled	20

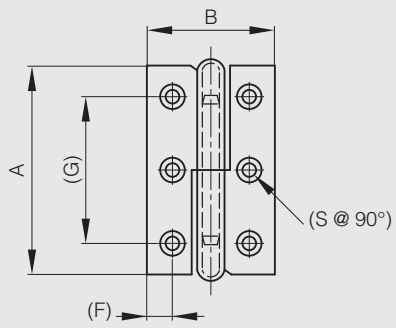

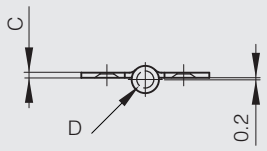

Various hinges

Lift-off hinges 30 mm long



Part number	Material	Finish	A	B	C	D	F	G	S	Note	Weight (g)
14-7-3390	steel	nickel plated	30	40	1.2	4	7.7	15	3	type 1 symmetric not shown	16
14-7-3391	steel	nickel plated	30	40	1.2	4	7.7	15	3	type 2 as shown below	16

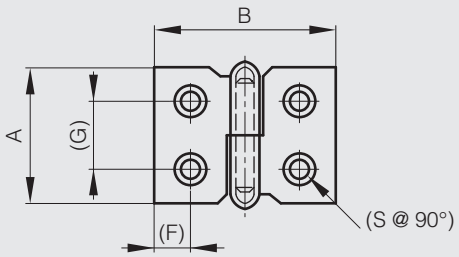

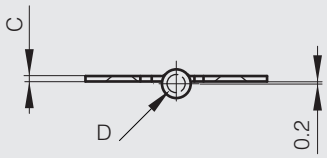

Lift-off hinges 40 mm long



Part number	Material	Finish	A	B	C	D	E	F	G	S	Note	Weight (g)
14-7-3392	steel	nickel plated	40	50	1.5	4	7.5	13	24	3	type 1 symmetric not shown	28
14-7-3393	steel	nickel plated	40	50	1.5	4	7.5	13	24	3	type 2 as shown below	28

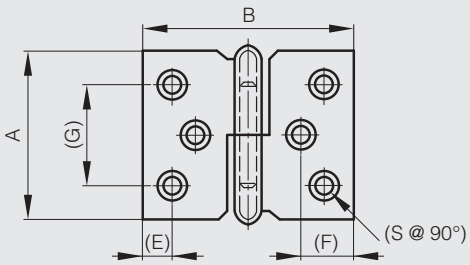

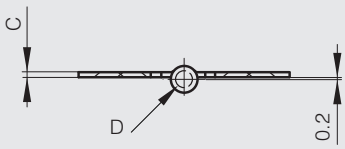

Various hinges

Lift-off hinges 60 to 80 mm long



Part number	Material	Finish	A	B	C	D	E	F	G	S	Note	Weight (g)
14-7-3396	steel	nickel plated	60	40	1.5	4	5.5	7	46	4	type 1 symmetric not shown	35
14-7-3397	steel	nickel plated	60	40	1.5	4	5.5	7	46	4	type 2 as shown below	35
14-7-3398	steel	nickel plated	68	45	1.5	4.5	6	8	54	4.5	type 1 symmetric not shown	46
14-7-3399	steel	nickel plated	68	45	1.5	4.5	6	8	54	4.5	type 2 as shown below	46
14-7-3400	steel	nickel plated	80	50	1.5	5	7.2	9.2	62	4	type 1 symmetric not shown	59
14-7-3401	steel	nickel plated	80	50	1.5	5	7.2	9.2	62	4	type 2 as shown below	59

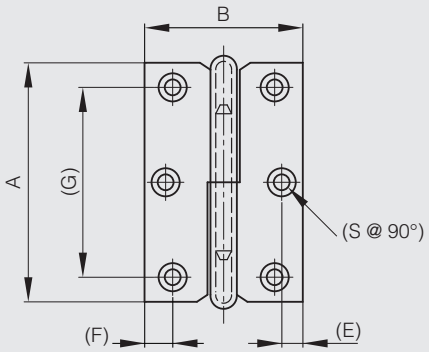

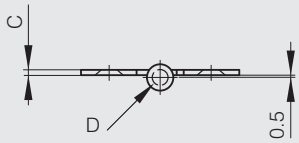

Lift-off hinges 80 x 60 mm - stainless steel

NEW!



Pin and washer in stainless steel.

Part number	Material	Finish	A	B	C	D	S	Note	Weight (g)
14-1-3873	304 stainless steel	raw	80	60	2	6	6.6	type 2 symmetric not shown	115
14-1-3872	304 stainless steel	raw	80	60	2	6	6.6	type 1 as shown below	115

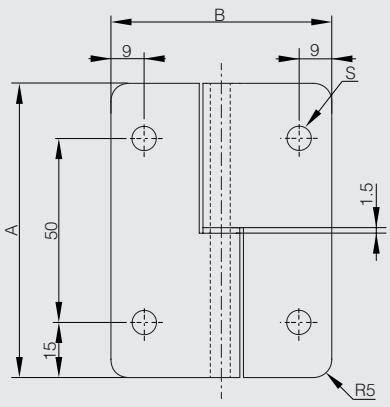

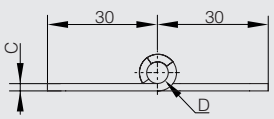

Various hinges

Lift-off hinges 80 x 80 mm - stainless steel with 6 holes



2 shapes available :
- shape with square ends (14-7-3727 and 14-7-3728).
- shape with round ends (14-7-3729 and 14-7-3730).

Only the visible side has a brushed Finish.

Part number	Material	Finish	A	B	C	D	S	Note	Weight (g)
14-7-3727	304 stainless steel	brushed	80	80	2.5	7	5.2	type 1 symmetric not shown / square corners	175
14-7-3728	304 stainless steel	brushed	80	80	2.5	7	5.2	type 2 as shown below / square corners	175
14-7-3729	304 stainless steel	brushed	80	80	2.5	7	5.2	type 1 symmetric not shown / round corners	175
14-7-3730	304 stainless steel	brushed	80	80	2.5	7	5.2	type 2 as shown below / round corners	175

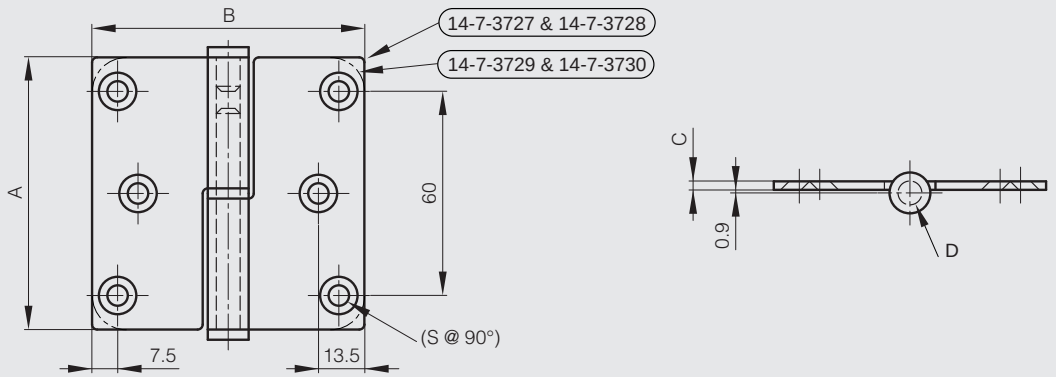

Lift-off hinges 100 x 82 mm - stainless steel with 8 holes



2 shapes available :
- shape with square ends (14-7-3675 and 14-7-36790).
- shape with round ends (14-7-3677 and 14-7-3681).

Only the visible side has a brushed Finish.

Part number	Material	Finish	A	B	C	D	S	Note	Weight (g)
14-7-3675	304 stainless steel	brushed	100	82	2.5	7	4.7	type 1 symmetric not shown / square corners	220
14-7-3677	304 stainless steel	brushed	100	82	2.5	7	4.7	type 1 symmetric not shown / round corners	220
14-7-3679	304 stainless steel	brushed	100	82	2.5	7	4.7	type 2 as shown below / square corners	220
14-7-3681	304 stainless steel	brushed	100	82	2.5	7	4.7	type 2 as shown below / round corners	220

