# Compact cylinders - Series 31

Product code: 31R2A032A200

*Datasheet creation date: 19/05/2026 20:48*

*Check the most updated document online* click here





## TECHNICAL DATA

| | |
|---|---|
| **Series** | 31 |
| **Version** | R=non-rotating with flange, only double acting |
| **Operation** | 2=double-acting |
| **Materials** | A = rolled stainless steel AISI 303 rod, tube profile aluminium |
| **Diameter (mm)** | 32 |
| **Construction** | A = standard |
| **Stroke (mm)** | 200 |
| **Seal options** | = standard |
| **Rod length (mm)** | 0 |
| **Rod lenght 2 (mm)** | 0 |
| **Certifications** | = standard |

Products designed for industrial applications. General terms and conditions for sale are available on www.camozzi.com.
This document contains a brief description of the products offered by Camozzi Automation at time of publication.
For more complete and up to date information about the Camozzi Automation product range, please refer to our online catalogue at https://shop.camozzi.com

# Compact cylinders - Series 31

Product code: 31R2A032A200

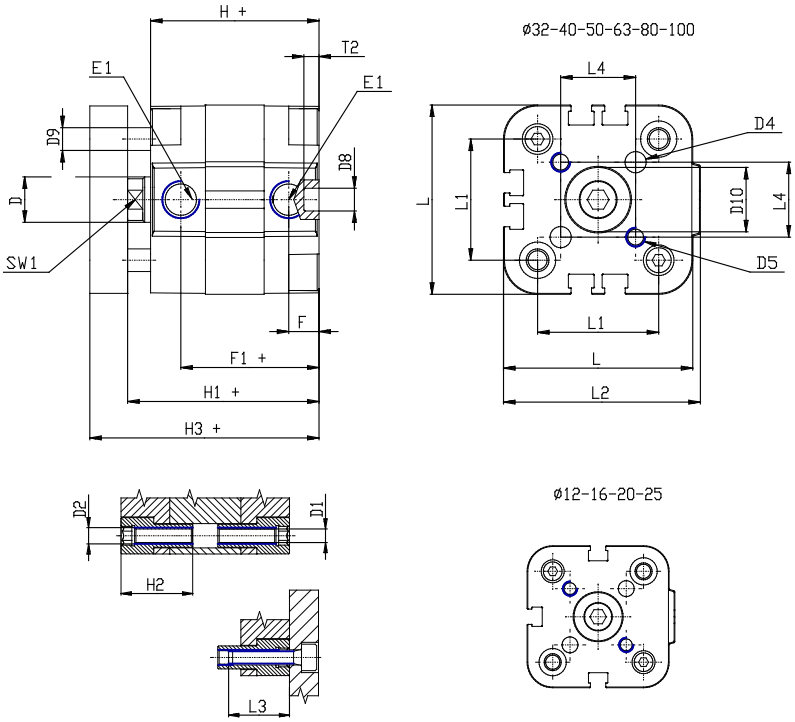


## DIMENSIONS

| | |
|---|---|
| **Ø D (mm)** | 12 |
| **Ø D1 (mm)** | 5.5 |
| **D2** | M6 |
| **D3** | M6 |
| **Ø D4 (mm)** | 5 |
| **D5** | M5 |
| **Ø D8 (mm)** | 6 |
| **D9 (mm)** | 6 |
| **D10 (mm)** | 17 |
| **E1** | G1\8 |
| **F (mm)** | 8.0 |
| **F1 (mm)** | 36.5 |
| **H (mm)** | 44.5 |
| **H1 (mm)** | 50.5 |
| **H2 (mm)** | 21.5 |
| **K1** | M10x1,25 |
| **L (mm)** | 50 |
| **L1 (mm)** | 32 |
| **L2 (mm)** | 52.0 |
| **L3 (mm)** | 20 |
| **L4 (mm)** | 19.8 |
| **T (mm)** | 12 |
| **T1 (mm)** | 22 |

| | |
|---|---|
| **T2 (mm)** | 4 |
| **SW1 (mm)** | 10 |

Products designed for industrial applications. General terms and conditions for sale are available on www.camozzi.com.
This document contains a brief description of the products offered by Camozzi Automation at time of publication.
For more complete and up to date information about the Camozzi Automation product range, please refer to our online catalogue at https://shop.camozzi.com