IIT244

Inductive full-metal sensor

IIK3012BFRKG/AM/IO/US-104

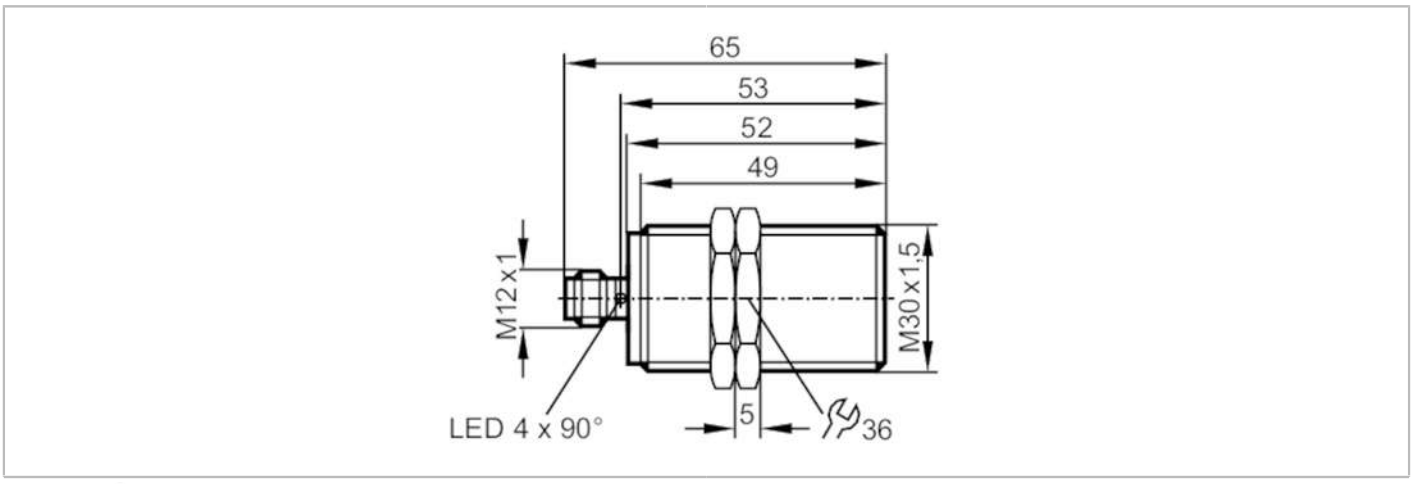

EC 1935/2004 IO-Link

Product characteristics		
Electrical design		PNP/NPN; (parameterisable)
Output function		normally open / normally closed; (parameterisable)
Communication interface		IO-Link
Housing		threaded type
Dimensions	[mm]	M30 x 1.5 / L = 65
Application		
Special feature		Full-metal housing
Application		constant cleaning with aggressive cleaning agents; regular cleaning processes
Pressure rating	[bar]	100
Note on pressure rating		sensing face
Electrical data		
Operating voltage	[V]	10...30 DC
Current consumption	[mA]	< 15
Protection class		III
Reverse polarity protection		yes
Outputs		
Electrical design		PNP/NPN; (parameterisable)
Output function		normally open / normally closed; (parameterisable)
Max. voltage drop switching output DC	[V]	2.5
Permanent current rating of switching output DC	[mA]	100
Switching frequency DC	[Hz]	50
Short-circuit protection		yes
Overload protection		yes
Detection zone		
Switch point IO-Link	[mm]	2.44...12.16; (parameterisable)
Measuring range IO-Link	[mm]	1.3...13

IIT244

Inductive full-metal sensor

IIK3012BFRKG/AM/IO/US-104

Accuracy / deviations			
Correction factor		steel: 1 / stainless steel: 0.7 / brass: 0.6 / aluminium: 0.5 / copper: 0.2	
Hysteresis	[% of Sr]	3...15	
Linearity error IO-Link	[%]	± 2; (of the final value of the measuring range)	
Repeatability IO-Link	[%]	± 1; (of the final value of the measuring range)	
Temperature coefficient		± 0,2 %/K; (of the final value of the measuring range)	
Interfaces			
Communication interface		IO-Link	
Transmission type		COM2 (38,4 kBaud)	
IO-Link revision		1.1	
SDCI standard		IEC 61131-9	
Profiles		Smart Sensor: Identification and diagnosis; Multi-channel, two setpoint switching sensor, type 0 Generic Profiled Sensor; Teach Channel	
SIO mode		yes	
Required master port type		A	
Min. process cycle time	[ms]	3.2	
Supported DeviceIDs		Type of operation	DeviceID
		Default	1090
Operating conditions			
Ambient temperature	[°C]	0...100	
Protection		IP 65; IP 66; IP 67; IP 68; IP 69K	
Tests / approvals			
EMC		EN 61000-4-2 ESD	4 kV CD / 8 kV AD
		EN 61000-4-3 HF radiated	10 V/m
		EN 61000-4-4 Burst	2 kV
		EN 61000-4-6 HF conducted	10 V
		EN 55011	class B
Impact resistance			1 J
Vibration resistance		EN 60068-2-6 Fc	20 g (10...3000 Hz) / 50 sweep cycles, 1 octave per minute, in 3 axes
Shock resistance		EN 60068-2-27 Ea	100 g 11 ms half-sine; 3 shocks each in every direction of the 3 coordinate axes
Continuous shock resistance		EN 60068-2-27	40 g 6 ms; 4000 shocks each in every direction of the 3 coordinate axes
Fast temperature change		EN 60068-2-14 Nc	TA = 0°C; TB = 100°C; t1 = 30 min; t2 = < 10 s 50 cycles
Salt spray test		EN 60068-2-52 Kb	severity level 5 (4 test cycles)
MTTF	[years]	635	
Embedded software included		yes	
UL approval		Ta	-25...70 °C
		Enclosure type	Type 1
		power supply	Limited Voltage/Current
		UL Approval no.	A008
		File number UL	E174191
Mechanical data			
Weight	[g]	128.7	
Housing		threaded type	

IIT244

Inductive full-metal sensor

IIK3012BFRKG/AM/IO/US-104

Mounting		flush mountable
Dimensions	[mm]	M30 x 1.5 / L = 65
Thread designation		M30 x 1.5
Materials		stainless steel (1.4404 / 316L); sensing face: stainless steel (1.4404 / 316L); LED window: PEI; lock nuts: stainless steel (1.4404 / 316L)
Tightening torque	[Nm]	80
Full-metal housing		yes

Displays / operating elements

Display	switching status	4 x LED, yellow

Accessories

Items supplied	lock nuts: 2

Remarks

Pack quantity	1 pcs.

Electrical connection

Connector: 1 x M12; coding: A

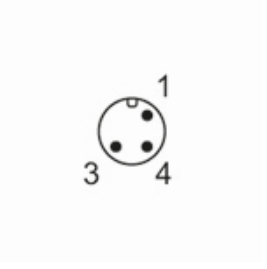

Connection

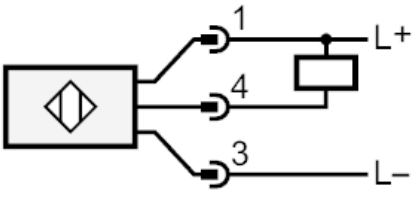

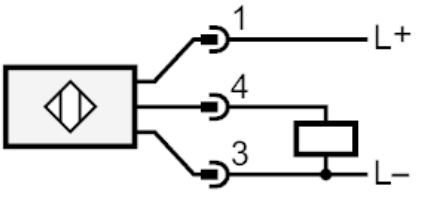

4	OUT / IO-Link