TP3233

Evaluation unit for PT100/PT1000 temperature sensors

TP- FEC -A-ZVG/US/

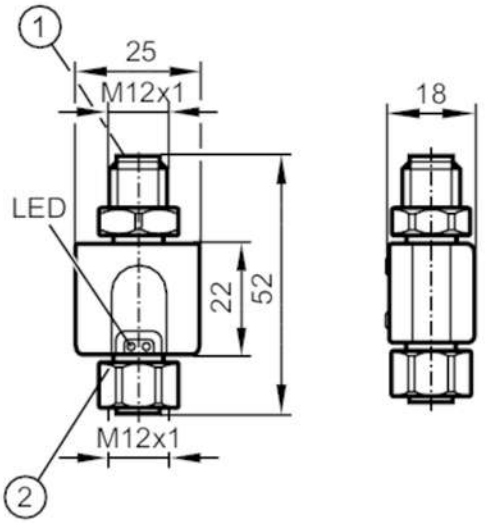

1 connection for voltage supply and output signals
2 connection for temperature sensor

Product characteristics			
Number of inputs and outputs		Number of analogue outputs: 1	
Measuring range		-50...300 °C	-58...572 °F
Application			
Special feature		Gold-plated contacts	
Application		for Pt100 and Pt1000 measuring elements	
Electrical data			
Operating voltage	[V]	20...32 DC	
Protection class		III	
Reverse polarity protection		yes	
Power-on delay time	[s]	1	
Integrated watchdog		yes	
Inputs / outputs			
Number of inputs and outputs		Number of analogue outputs: 1	
Outputs			
Total number of outputs		1	
Output signal		analogue signal; IO-Link; (configurable)	
Number of analogue outputs		1	
Analogue current output	[mA]	4...20	
Max. load	[Ω]	300	
Short-circuit protection		yes	
Type of short-circuit protection		pulsed	
Overload protection		yes	
Measuring/setting range			
Measuring range		-50...300 °C	-58...572 °F
Factory setting		0...300 °F	

TP3233

Evaluation unit for PT100/PT1000 temperature sensors

TP- FEC -A-ZVG/US/

Accuracy / deviations			
Precision analogue output	[K]	± 0,3 + (± 0,1 % MS)	
Temperature coefficient [% of the span / 10 K]		0,1	
Response times			
Max. measuring/display cycle	[ms]	100	
Interfaces			
Communication interface		IO-Link	
Transmission type		COM2 (38,4 kBaud)	
IO-Link revision		1.0	
Operating conditions			
Ambient temperature	[°C]	-25...70	
Storage temperature	[°C]	-40...85	
Protection		IP 67	
Tests / approvals			
EMC		EN 61326-1	
Shock resistance		DIN IEC 68-2-27	50 g (11 ms)
Vibration resistance		DIN IEC 68-2-6	20 g (10...2000 Hz)
MTTF	[years]	449	
Mechanical data			
Weight	[g]	40.5	
Dimensions	[mm]	M12 x 1	
Thread designation		M12 x 1	
Materials		PA; PET	
Sealing material		FKM	
Remarks			
Remarks		operating voltage "supply class 2" according to cULus	
		MS = set measuring span	
Pack quantity		1 pcs.	

Electrical connection

Connector: 1 x M12; coding: A; Moulded body: TPU; Locking: stainless steel (1.4404 / 316L); Sealing: FKM; Contacts: gold-plated



TP3233

Evaluation unit for PT100/PT1000 temperature sensors

TP- FEC -A-ZVG/US/

Connection

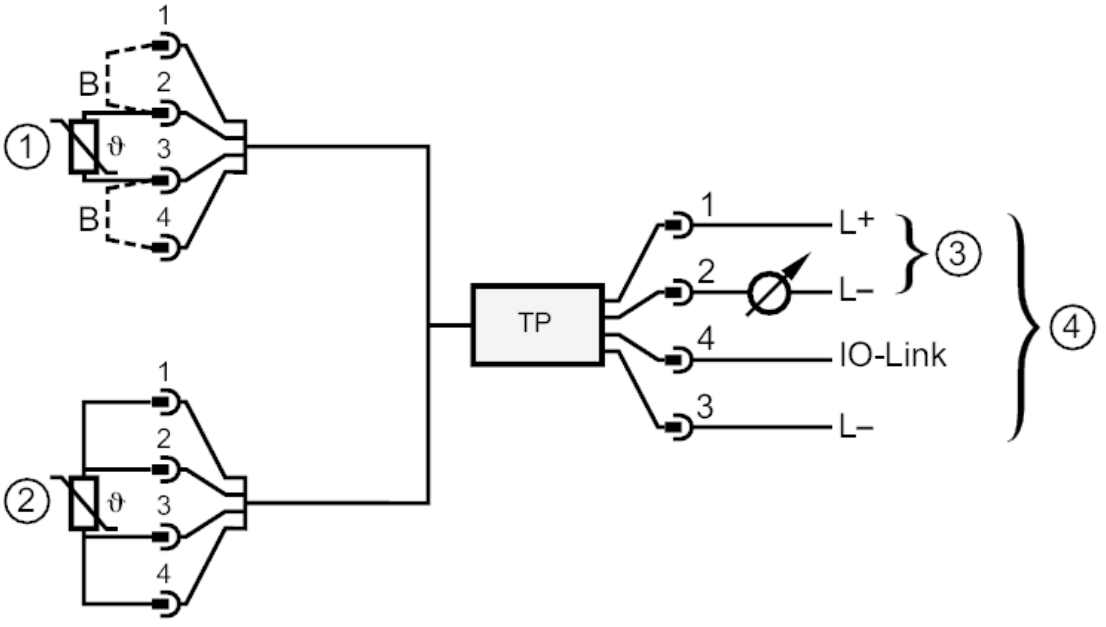

1:	two-wire sensor
2:	four-wire sensor
3:	operation as 2-wire temperature transmitter
4:	operation as 3-wire unit, IO-Link communication possible
B:	link