SKF Speedi-Sleeve new generation

and wear sleeves for heavy industrial applications



Contents

The new generation concept and characteristics **5**
- Enhanced sealing system solution 5
- Features 5
- Removable flange 6
- SKF Speedi-Sleeve Gold 6
- Size range 6
- Selecting the sleeve size 6
- Test results 7

Installing SKF Speedi-Sleeve **8**
- A new seal counterface in a few minutes 8
- Installation procedure 9
- Removal 9

Product tables **10**
- Metric dimensions 10
- Inch dimensions 22

Wear sleeves for heavy industrial applications **34**

Product tables **36**
- Metric dimensions 36
- Inch dimensions 38

The new generation concept and characteristics

Enhanced sealing system solution

To seal effectively, radial shaft seals must run against a smooth, round counterface. If the counterface becomes worn, the seal will no longer be able to fulfil its function, which is to retain lubricant and to exclude contaminants.

Typically, the counterface becomes scored when a contaminant particle is caught under the sealing lip and abrades a track as the shaft rotates. As this continues, the seal will enable more particles to pass or get stuck eventually leading to malfunction of the component that the sealing system is meant to protect. A simple seal replacement will not be sufficient and to repair the shaft, it is usually necessary to disassemble the machine to be able to grind down the counterface until it is within specification again. Otherwise, the sealing system will not function properly.

SKF Speedi-Sleeve is a well-proven solution to overcome problems with worn shafts, without having to disassemble the shaft or specifying a new size of the replacement seal, while offering an excellent sealing surface. Now, SKF has developed a patent pending new generation SKF Speedi-Sleeve with features providing an even further enhanced sealing system performance.

Features

The new generation of SKF Speedi-Sleeve combines a proprietary stainless steel material and manufacturing process, resulting in an optimized seal counterface surface that minimizes wear on both the sleeve and sealing lip. The proprietary material provides increased strength and excellent ductility properties of the sleeve. Imperceptible lubricant pockets enable the lubricant to reside on the sleeve and thereby prevent dry running of the sealing lip that otherwise can create excessive wear. The sleeves are thin-walled (0,28 mm *(0.011 in.)*) and the contact surface is wear resistant and manufactured to minimize directionality (0° ±0,05) with a finish of R_a 0,25 to 0,5 µm *(10 to 20 µin.)*. This is, in fact, a better counterface than can often be achieved on a shaft.

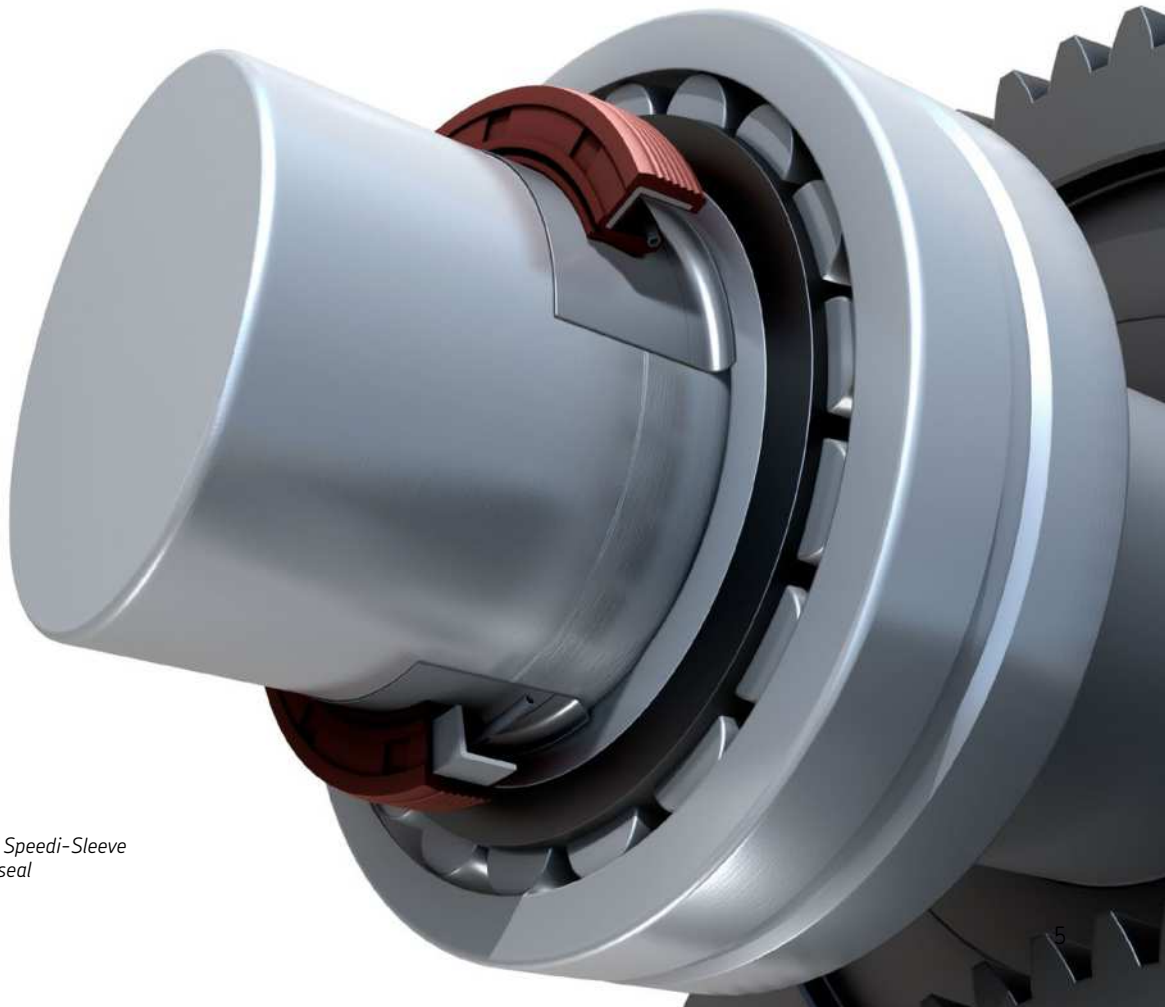

The optimized sealing system: SKF Speedi-Sleeve new generation + SKF radial shaft seal

Removable flange

SKF Speedi-Sleeve has a removable flange to simplify installation (→ **fig. 1**). The flange can most often be left intact, but in applications where the flange will interfere with other system components, it should be removed so it does not cause friction heat and wear debris. The flange should also be removed in applications where it may reduce the supply of lubricant to the seal. This would cause a reduced cooling effect of the lubricant, resulting in elevated underlip temperature and premature ageing of the seal material.

If the flange is to be removed, it should be cut from the outside diameter into the radius in one location prior to installation. The flange can then be twisted and raised up after installation and grasped with a pair of pliers and twisted into a coil.

SKF Speedi-Sleeve Gold

The new generation of SKF Speedi-Sleeve is also available in the Gold version, designed for highly abrasive applications. A thin, metallic coating applied to the base stainless steel imparts a gold colour and significantly increases durability. SKF Speedi-Sleeve Gold is particularly effective in environments where there are abrasive contaminants, especially when combined with a seal manufactured from the SKF fluoro rubber material SKF Duralife[1]. This sealing system solution lasted 2 500 hours in a contamination test.

The installation procedure is common to both SKF Speedi-Sleeve designs and the original seal size can still be used.

All sleeves listed in the product tables starting on **page 12** can be manufactured as SKF Speedi-Sleeve Gold.

Size range

The standard size range covers sleeves for shaft diameters from 11,99 to 203,33 mm (*0.472 to 8 in.*). Depending on production quantities, non-standard sizes can be manufactured. For additional information, contact SKF. Each sleeve is designed to fit a specific shaft range, usually above and below the nominal shaft diameter. This permits some flexibility to accommodate variations in the actual shaft diameter.

Selecting the sleeve size

To determine the appropriate sleeve size, it is first necessary to clean the shaft carefully. The diameter of an undamaged section of the seal counterface should then be measured on at least three different planes. The arithmetical mean of these measurements determines the size of SKF Speedi-Sleeve. If the value lies within the permissible range listed in the product table for the shaft diameter d1, the selected SKF Speedi-Sleeve will have an adequate tight fit on the shaft and will not require an adhesive.

Fig. 1

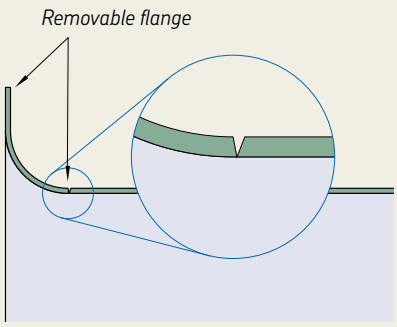

SKF Speedi-Sleeve removable flange



SKF Speedi-Sleeve new generation, Gold version



The standard size range covers sleeves for shaft diameters from 11,99 to 203,33 mm (0.472 to 8 in.).

[1] Previously named Longlife

Test results

The previous and new generation of SKF Speedi-Sleeve products were tested for abrasion resistance under both coarse and fine dust conditions. A 500 hour contamination test (**→ diagram 1**) showed that when compared to the previous generation sleeve, the new generation SKF Speedi-Sleeve reduced abrasion by a factor of 1,5 and was still operating efficiently.

To test sealing system effectiveness, a 2 000 hour life test was performed (**→ diagram 2**) using SKF Speedi-Sleeve new and previous generation products and SKF Wave seals made from the SKF fluoro rubber material SKF Duralife. The test results showed that SKF Speedi-Sleeve new generation reduced the sealing lip wear and the variation in the wear rate by approximately 30% compared to the previous generation sleeve and outperformed a chromium-plated surface by a factor of 2. This reduction improves the sealing system reliability as well as the predictability of the system service life.

Both tests were carried out under the same operating conditions:

- temperatures up to 110 °C (*225 °F*)
- linear shaft speeds of up to 8,6 m/s (*1 700 ft/min*)

In other tests, it was found that continuous salt spray at 35 °C (*95 °F*) produced no trace of corrosion even after 600 hours. This optimized performance is made possible through the use of the new generation of SKF Speedi-Sleeve.

Diagram 1

SKF Speedi-Sleeve wear test
Abrasive media, test stopped at 500 hours

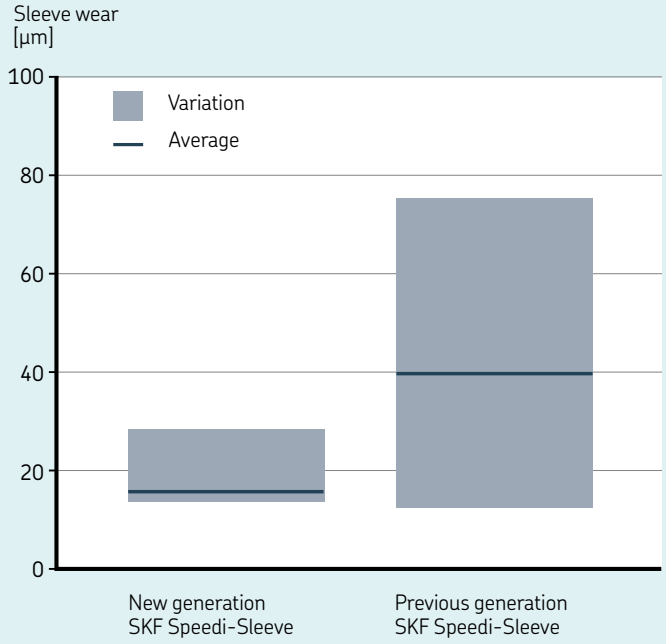

Diagram 2

Sealing lip wear test
Seals made from fluoro rubber, test stopped at 2 000 hours

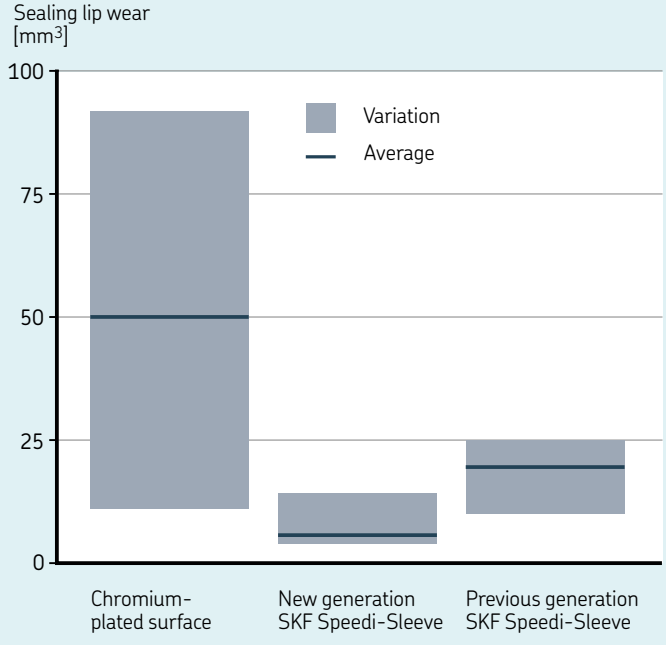

Installing SKF Speedi-Sleeve

A new seal counterface in a few minutes

Although installation is simple, it should be done carefully to achieve the best results. As the thin-walled sleeve has an interference fit, any disturbances on the shaft surface may create a similar pattern on the sleeve surface and cause the seal to leak. Therefore, the seal counterface surface of the shaft should be carefully cleaned and any burrs or rough spots filed down prior to installation. Deep wear grooves, scratches or very rough surfaces should be treated with a suitable powdered metal epoxy-type filler.

The sleeve must be positioned on the shaft before the filler has hardened.

SKF Speedi-Sleeve must not be installed over keyways, cross holes, splines or threads since this will result in deformation of the sleeve, making it difficult for the seal to follow its new counterface surface as it rotates.

SKF Speedi-Sleeve should never be heated prior to installation. Using heat will cause the sleeve to expand, but when it cools, it may not contract back to its original size, resulting in a loose fit on the shaft. See **fig. 2** for different SKF Speedi-Sleeve installations.

Fig. 2

SKF Speedi-Sleeve installations

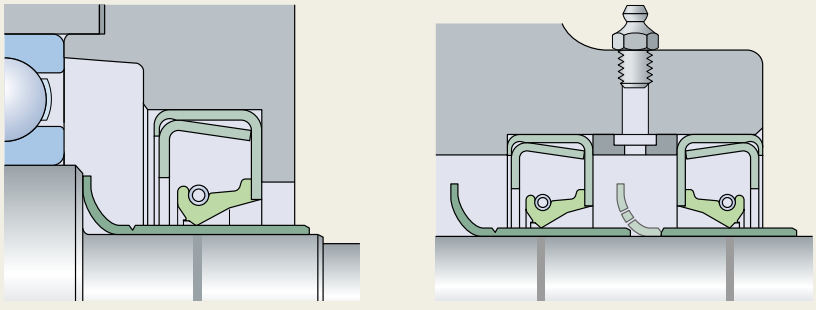

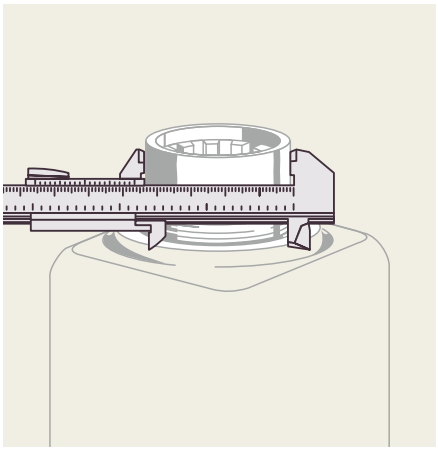

Clean and measure the diameter of the worn shaft and mark the area where the sleeve will cover the scored portion of the shaft.

Fig. 4

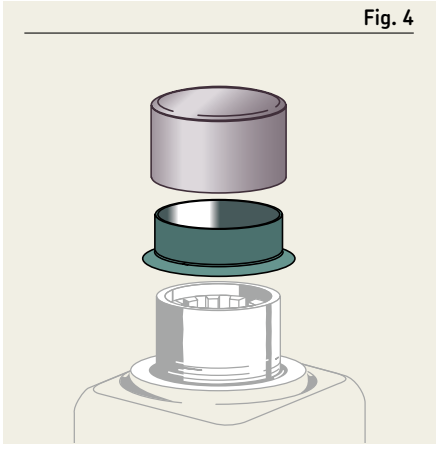

Place SKF Speedi-Sleeve on the shaft and then place the special installation tool over the sleeve.

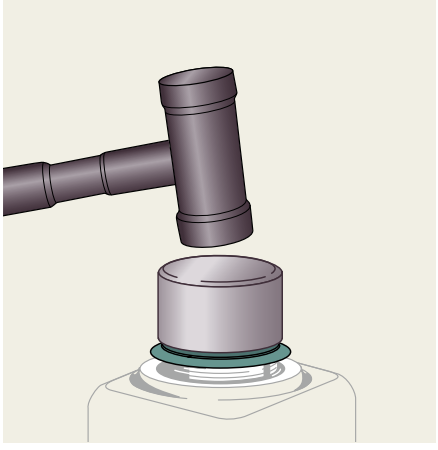

Tap the installation tool with a mallet until the sleeve is seated on the shaft over the marked area. Remove the installation tool.

Installation procedure

1. Clean the seal counterface surface on the shaft. File down any burrs or rough spots and make sure that the sleeve will not be installed over keyways, cross holes, splines or similar.
2. Measure the diameter on an unworn portion of the shaft where the sleeve will be positioned (→ **fig. 3**). Measure in three positions and average the readings to make sure the shaft is within recommended specifications. If the average diameter is within the range for a given sleeve size, there is sufficient press fit built into the sleeve to prevent it from sliding or spinning without using an adhesive.
3. Determine where the sleeve must be positioned to cover the worn area. Measure to the exact point, or mark directly on the surface. The sleeve must be placed over the worn area, not just bottomed or left flush with the end of the shaft.
4. Shallow wear grooves do not require filling. Optionally, a light layer of a non-hardening sealant can be applied to the inside diameter surface of the sleeve. Clean away sealant that migrates to the shaft or sleeve outside diameter surface.
5. If the shaft is deeply scored, fill the groove with a powdered metal epoxy-type filler. Install the sleeve before the filler hardens, enabling the sleeve to wipe off any excess filler. Clean away any remaining filler from the sleeve outside diameter surface.
6. It should be repeated that heat should never be used to install SKF Speedi-Sleeve.
7. If the flange should be removed after installation, cut it from the outside diameter into the radius in one location. The flange end of the sleeve goes on the shaft first. Then, place the installation tool over the sleeve (→ **fig. 4**).
8. Gently tap the centre of the installation tool until the sleeve covers the worn shaft surface (→ **fig. 5**). If the installation tool is too short, a length of pipe or tubing with a squared-off, burr-free end can be used. Be sure that the inside diameter of the pipe is the same as that of the installation tool. Use care not to scratch the precision ground sleeve's outside diameter.
9. SKF Speedi-Sleeve should always be installed so that the outside edge of the sleeve is seated on the full shaft diameter. It must not rest in or outside the chamfer area since the sharp edge will likely cut the sealing lip during seal installation.
10. If the flange was cut for removal, use a pair of long-nosed pliers to grasp the flange away from the sleeve and twist it into a coil, being careful not to lift the end of the sleeve off the shaft or it will leave a jagged edge. Flange removal must be done with care to avoid damage to the outside diameter of the sleeve.
11. After the sleeve is installed, check again for burrs that could damage the seal.
12. Lubricate the sleeve with the system medium before installing the seal.
13. Proceed with seal installation.

Removal

SKF Speedi-Sleeve can be removed by applying heat to the sleeve with an electric heat blower, which will expand it enough to let it slide off the shaft without causing any damage to the shaft. Alternatively, the sleeve can be removed in any of the following ways, always using care not to damage the shaft surface:

- by relieving the press-fit tension using a small hammer to peen across the full width of the sleeve
- by using a cold chisel to cut through the sleeve
- by using a pair of wire cutters starting at or near the flange and applying a twisting motion

Please note that SKF Speedi-Sleeve cannot be reused.

SKF Speedi-Sleeve – metric dimensions (converted from inch dimensions)

d_1 **11,99–34,01** mm

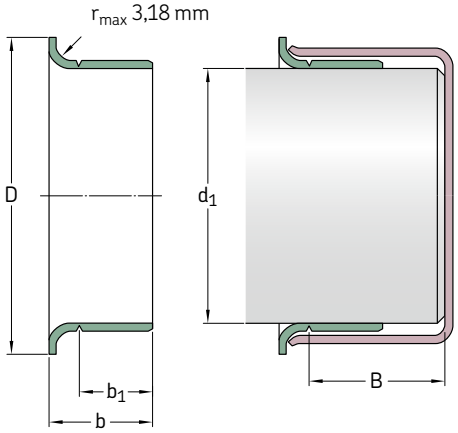

Shaft diameter range		Nominal dimensions					Designations
d_1 min	max	d_1	D ±1,6	b_1 ±0,8	b ±0,8	B[1]	
mm							–
11,99	**12,07**	11,99	15,49	5,99	8,41	47,63	**99049**
12,65	**12,75**	12,70	15,49	6,35	8,74	50,80	**99050**
13,89	**14,00**	14,00	19,05	6,35	9,93	46,51	**99055**
14,22	**14,38**	14,30	19,05	6,35	9,93	46,51	**99056**
14,96	**15,06**	15,01	19,05	5,00	8,99	47,29	**99059**
15,82	**15,93**	15,88 15,88	19,05 19,05	7,95 7,95	10,31 10,31	50,80 50,80	**99810**[2] **99062**
15,90	**16,00**	16,00	18,24	7,95	11,13	50,80	**99058**
16,94	**17,04**	16,99	22,23	8,00	11,00	50,80	**99068**
17,32	**17,42**	17,37	22,86	7,95	11,13	50,80	**99060**
17,88	**18,01**	18,01	24,43	8,00	11,00	46,00	**99082**
19,00	**19,10**	19,05 19,05	24,00 24,00	7,95 7,95	11,13 11,13	50,80 50,80	**99811**[2] **99076**
19,28	**19,33**	19,30	23,83	7,95	11,13	50,80	**99081**
19,81	**19,91**	19,84	23,75	7,95	11,13	50,80	**99080**
19,94	**20,04**	19,99	23,62	8,00	11,00	50,80	**99078**
20,62	**20,70**	20,65	30,18	9,53	14,30	76,20	**99083**
21,77	**21,87**	21,82	29,34	6,35	9,53	50,80	**99086**
21,87	**22,00**	22,00 22,00	30,18 30,18	6,58 8,00	9,12 11,99	47,14 46,02	**99084** **99085**
22,17	**22,28**	22,23 22,23	27,79 27,79	7,95 7,95	11,13 11,13	50,80 50,80	**99812**[2] **99087**
23,06	**23,16**	23,11 23,11	30,94 30,94	7,95 7,95	11,13 11,13	46,91 46,91	**99860**[2] **99091**
23,88	**24,00**	24,00	28,70	7,95	11,13	50,80	**99092**
24,54	**24,64**	24,61 24,61	28,70 28,70	7,95 15,88	11,13 18,26	50,80 50,80	**99094** **99096**

1) Possible max. distance of the rear groove from the shaft end when the installation tool supplied with the sleeve is used
2) SKF Speedi-Sleeve Gold

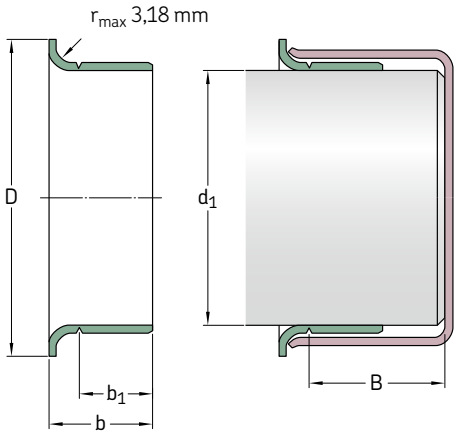

Shaft diameter range		Nominal dimensions					Designations
d_1 min	max	d_1	D ±1,6	b_1 ±0,8	b ±0,8	B[1]	
mm							–
24,94	**25,04**	24,99	33,02	7,95	11,00	50,80	**99813**[2]
		24,99	33,02	7,95	11,00	50,80	**99098**
25,35	**25,45**	25,40	30,96	7,95	11,13	50,80	**99814**[2]
		28,58	38,10	7,95	11,13	17,48	**99112**
		25,40	30,96	7,95	11,13	50,80	**99868**[3]
25,88	**26,01**	26,01	33,35	8,00	11,99	46,05	**99103**
26,92	**27,03**	27,00	33,53	7,95	11,13	46,81	**99815**[2]
		27,00	33,53	7,95	11,13	46,81	**99106**
27,61	**27,71**	27,66	35,71	7,95	11,13	15,88	**99108**
27,94	**28,04**	27,99	34,93	9,53	12,70	46,81	**99866**[2]
		27,99	34,93	9,53	12,70	46,81	**99111**
28,52	**28,63**	28,58	38,10	7,95	11,13	17,48	**99816**[2]
		28,58	38,10	7,95	11,13	17,48	**99112**
		28,58	38,10	9,53	12,70	17,48	**99116**
29,31	**29,41**	29,36	34,29	9,53	12,70	17,48	**99865**[2]
		29,36	34,29	9,53	12,70	17,48	**99120**
29,79	**29,92**	29,85	35,56	7,95	11,13	17,48	**99122**
29,95	**30,07**	30,00	35,56	8,00	11,00	17,48	**99114**
30,10	**30,23**	30,18	35,56	7,95	11,13	17,48	**99118**
30,89	**31,04**	30,96	39,70	7,95	11,00	15,88	**99123**
31,42	**31,57**	31,50	39,12	8,00	11,13	17,48	**99141**
31,67	**31,83**	31,75	38,10	7,95	11,13	17,48	**99817**[2]
		31,75	38,10	7,95	11,13	17,48	**99125**
31,93	**32,08**	32,00	38,10	8,00	11,13	17,48	**99128**
32,94	**33,05**	32,99	40,49	15,01	18,01	25,40	**99121**
33,22	**33,38**	33,35	40,64	6,35	9,53	20,65	**99129**
33,27	**33,43**	33,35	40,49	12,70	15,88	20,65	**99818**[2]
		33,35	40,49	12,70	15,88	20,65	**99131**
33,86	**34,01**	34,01	41,28	12,70	15,88	20,65	**99134**

[1] Possible max. distance of the rear groove from the shaft end when the installation tool supplied with the sleeve is used
[2] SKF Speedi-Sleeve Gold
[3] Previously 99100

SKF Speedi-Sleeve – metric dimensions (converted from inch dimensions)

d_1 **34,82–49,28** mm

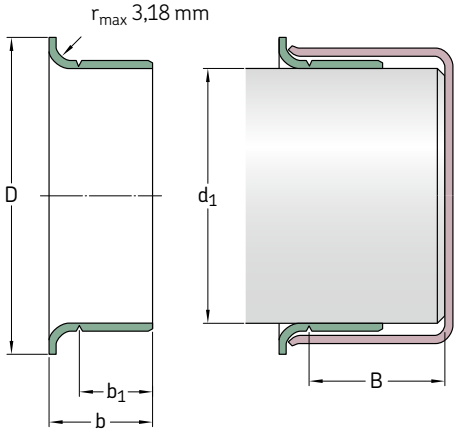

Shaft diameter range		Nominal dimensions					Designations
d_1 min	max	d_1	D ±1,6	b_1 ±0,8	b ±0,8	B[1]	
mm							–
34,82	**34,98**	34,93	41,61	7,95	11,13	20,65	**99133**
		34,93	41,61	12,70	15,88	20,65	**99819**[2]
		34,93	41,61	12,70	15,88	20,65	**99138**
34,93	**35,08**	34,93	41,61	13,00	16,00	20,65	**99820**[2]
		34,93	41,61	13,00	16,00	20,65	**99139**
35,84	**35,99**	35,99	45,24	13,00	16,99	24,99	**99146**
	40,84	40,77	49,23	12,70	16,28	25,40	**99160**
36,37	**36,53**	36,53	45,24	14,30	17,48	25,81	**99821**[2]
		36,53	45,24	14,30	17,48	25,81	**99143**
36,45	**36,60**	36,53	45,24	9,53	12,70	25,81	**99144**
37,85	**38,00**	38,00	45,24	13,00	16,99	24,99	**99147**
38,02	**38,18**	38,10	45,24	9,53	12,70	25,81	**99823**[2]
		38,10	45,24	9,53	12,70	25,81	**99150**
		38,10	45,24	14,30	17,48	25,81	**99822**[2]
		38,10	45,24	14,30	17,48	25,81	**99149**
38,61	**38,76**	38,68	47,22	11,13	14,30	25,81	**99152**
39,34	**39,50**	39,42	47,22	11,13	14,30	25,81	**99155**
39,60	**39,75**	39,67	47,22	14,30	17,48	25,81	**99824**[2]
		39,67	47,22	14,30	17,48	25,81	**99156**
39,78	**39,93**	39,85	47,22	15,88	19,05	25,81	**99159**
39,85	**40,01**	40,01	46,99	9,91	12,93	25,40	**99153**
39,93	**40,08**	40,08	46,99	13,00	16,00	25,98	**99825**[2]
		40,08	46,99	13,00	16,00	25,98	**99157**
40,69	**40,84**	40,77	49,23	12,70	16,28	25,40	**99160**
40,84	**41,00**	41,00	49,23	12,70	15,88	25,81	**99163**
41,20	**41,35**	41,28	47,63	7,95	11,13	25,81	**99161**
		41,28	47,63	14,30	17,48	20,65	**99826**[2]
		41,28	47,63	14,30	17,48	20,65	**99162**
41,83	**42,01**	41,91	53,01	11,30	14,50	21,49	**99166**
		41,91	53,01	14,30	17,50	21,01	**99169**
		42,01	53,01	14,30	17,50	21,01	**99873**[2]

1) Possible max. distance of the rear groove from the shaft end when the installation tool supplied with the sleeve is used
2) SKF Speedi-Sleeve Gold

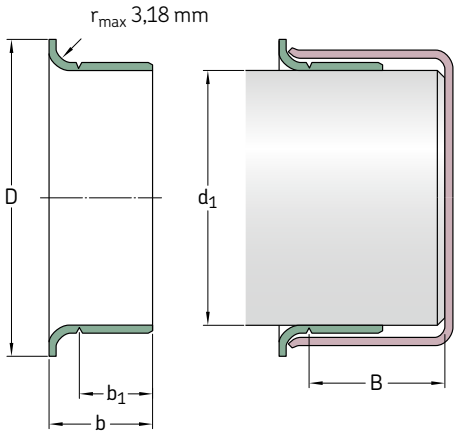

Shaft diameter range		Nominal dimensions					Designations
d_1 min	max	d_1	D ±1,6	b_1 ±0,8	b ±0,8	B[1]	
mm							–
41,99	**42,14**	42,06	53,01	13,97	17,50	21,01	**99165**
42,77	**42,93**	42,88	48,41	14,30	17,48	22,23	**99168**
42,80	**42,95**	42,88	48,41	7,95	11,13	22,23	**99167**
42,85	**43,00**	43,00	48,41	12,70	15,88	21,44	**99182**
43,56	**43,71**	43,66	51,59	14,30	17,48	20,65	**99171**
44,09	**44,25**	44,17	52,40	9,53	12,70	20,65	**99170**
44,37	**44,53**	44,45	52,20	9,53	12,70	20,65	**99172**
		44,45	52,40	13,49	15,88	22,30	**99180**
		44,45	52,40	14,30	17,48	20,65	**99827**[2]
		44,45	52,40	14,30	17,48	20,65	**99174**
		44,45	52,40	19,05	22,23	20,65	**99828**[2]
		44,45	52,40	19,05	22,23	20,65	**99175**
44,73	**44,88**	44,86	52,40	14,30	17,48	20,65	**99829**[2]
		44,86	52,40	14,30	17,48	20,65	**99176**
44,93	**45,09**	45,01	53,01	14,00	16,99	20,62	**99830**[2]
		45,01	53,01	14,00	16,99	20,62	**99177**
45,16	**45,31**	45,24	53,98	16,94	20,32	26,97	**99179**
45,95	**46,10**	46,05	53,09	14,30	17,48	25,40	**99831**[2]
		46,05	53,09	14,30	17,48	25,40	**99181**
47,17	**47,32**	47,22	54,76	14,30	17,48	25,40	**99185**
47,40	**47,55**	47,45	55,58	22,58	26,04	25,40	**99186**
47,55	**47,70**	47,63	55,96	4,45	7,49	18,90	**99190**
		47,63	55,96	7,49	10,54	18,90	**99188**
		47,63	55,96	9,53	13,11	26,67	**99184**
		47,63	55,96	14,30	17,48	25,40	**99832**[2]
		47,63	55,96	14,30	17,48	25,40	**99187**
47,93	**48,08**	48,03	56,01	14,00	16,97	24,99	**99189**
48,49	**48,64**	48,56	56,36	9,53	12,70	25,40	**99192**
49,12	**49,28**	49,23	56,36	14,30	17,48	25,40	**99833**[2]
		49,23	56,36	14,30	17,48	25,40	**99193**

[1] Possible max. distance of the rear groove from the shaft end when the installation tool supplied with the sleeve is used
[2] SKF Speedi-Sleeve Gold

SKF Speedi-Sleeve – metric dimensions (converted from inch dimensions)

d_1 **49,91–69,42** mm

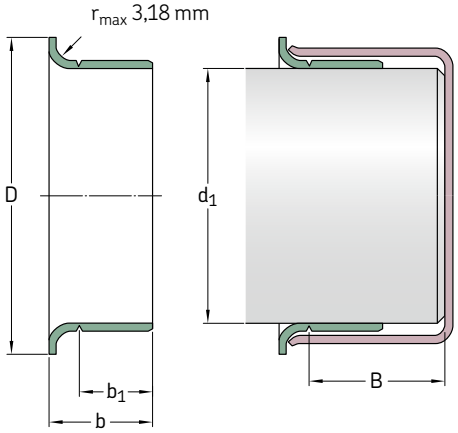

Shaft diameter range		Nominal dimensions					Designations
d_1 min	max	d_1	D ±1,6	b_1 ±0,8	b ±0,8	B[1]	
mm							–
49,91	**50,06**	50,01	56,49	14,00	16,97	34,29	**99052**
		50,01	57,00	14,00	16,97	24,99	**99196**
50,22	**50,37**	50,29	58,75	14,30	17,88	26,67	**99198**
50,72	**50,88**	50,80	61,11	14,30	17,48	25,55	**99834**[2]
		50,80	61,11	14,30	17,48	25,40	**99199**
		50,80	61,11	22,23	25,40	25,40	**99835**[2]
		50,80	61,11	22,23	25,40	25,40	**99200**
51,82	**51,99**	51,99	62,71	12,70	15,88	34,52	**99878**[3]
52,25	**52,40**	52,40	62,71	19,84	23,83	34,93	**99205**
53,92	**54,05**	53,98	61,52	12,70	19,05	32,54	**99210**
53,95	**54,10**	53,98	61,52	19,84	23,83	34,93	**99836**[2]
		53,98	61,52	19,84	23,83	34,93	**99212**
		63,50	71,63	19,84	23,83	34,93	**99840**[2]
54,91	**55,07**	54,99	62,00	19,99	22,99	31,75	**99863**[2]
		54,99	62,00	19,99	22,99	31,75	**99215**
55,52	**55,68**	55,58	63,50	19,84	23,83	33,35	**99218**
55,83	**56,01**	56,01	64,29	12,70	15,88	33,35	**99220**
		56,01	64,29	19,79	23,77	80,01	**99224**
56,57	**56,72**	56,64	64,29	12,70	15,88	33,35	**99861**[2]
		56,64	64,29	12,70	15,88	33,35	**99229**
		56,64	64,29	19,84	23,01	31,75	**99230**
56,82	**56,97**	56,90	65,10	19,41	22,86	31,75	**99226**
57,12	**57,28**	57,15	64,29	7,95	11,13	33,35	**99838**[2]
		57,15	64,29	7,95	11,13	33,35	**99227**
		57,15	64,29	19,84	23,83	33,35	**99837**[2]
		57,15	64,29	19,84	23,83	33,35	**99225**
57,91	**58,06**	57,99	65,99	19,99	23,83	34,93	**99219**
58,65	**58,80**	58,75	68,28	19,84	23,83	34,93	**99231**
59,11	**59,26**	59,13	69,85	19,05	22,23	38,10	**99233**

1) Possible max. distance of the rear groove from the shaft end when the installation tool supplied with the sleeve is used
2) SKF Speedi-Sleeve Gold
3) Previously 99204

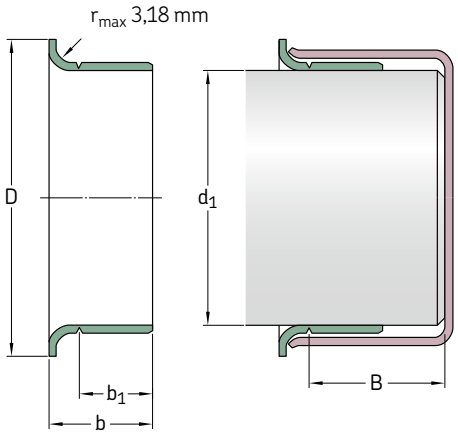

Shaft diameter range		Nominal dimensions					Designations
d_1 min	max	d_1	D ±1,6	b_1 ±0,8	b ±0,8	B[1]	
mm							–
59,92	**60,07**	59,99	70,74	9,40	11,43	37,36	**99241**
		59,99	70,74	19,99	22,99	34,93	**99869**[2]
		59,99	70,74	19,99	22,99	34,93	**99235**
60,25	**60,40**	60,33	69,85	15,09	19,05	34,93	**99238**
60,30	**60,45**	60,33	69,85	13,36	17,35	34,93	**99240**
		60,33	69,85	19,84	23,83	34,93	**99839**[2]
		60,33	69,85	19,84	23,83	34,93	**99237**
61,82	**62,00**	61,93	71,83	19,84	23,83	35,38	**99243**
		62,00	71,83	12,70	15,88	36,20	**99244**
61,85	**62,00**	61,93	71,83	12,70	15,88	36,20	**99242**
63,22	**63,37**	63,30	73,03	19,84	23,83	35,38	**99249**
63,42	**63,58**	63,50	71,63	14,10	16,51	22,61	**99253**
63,50	**63,65**	63,50	71,83	12,70	16,66	35,38	**99248**
		63,50	71,63	19,84	23,83	34,93	**99840**[2]
		63,50	71,63	19,84	23,83	34,93	**99250**
63,75	**63,91**	63,91	71,83	19,84	23,01	36,53	**99251**
64,92	**65,07**	65,00	72,39	19,99	22,99	34,93	**99841**[2]
		76,02	85,32	14,30	17,48	34,93	**99298**
		65,00	72,39	19,99	22,99	34,93	**99254**
65,02	**65,18**	65,10	73,43	19,84	23,83	34,93	**99256**
65,91	**66,07**	65,99	75,95	19,84	23,83	31,75	**99259**
66,50	**66,65**	66,57	77,39	19,84	23,83	34,93	**99261**
66,57	**66,73**	66,68	77,39	19,84	23,01	34,93	**99264**
66,60	**66,75**	66,68	77,39	12,70	15,88	34,93	**99260**
66,68	**66,83**	66,68	77,39	19,84	23,83	34,93	**99842**[2]
		66,68	77,39	19,84	23,83	34,93	**99262**
67,82	**68,00**	68,00	79,38	19,05	22,23	42,88	**99266**
69,27	**69,42**	69,34	79,38	19,84	23,01	33,35	**99268**

[1] Possible max. distance of the rear groove from the shaft end when the installation tool supplied with the sleeve is used
[2] SKF Speedi-Sleeve Gold

SKF Speedi-Sleeve – metric dimensions (converted from inch dimensions)

d_1 **69,60–89,05** mm

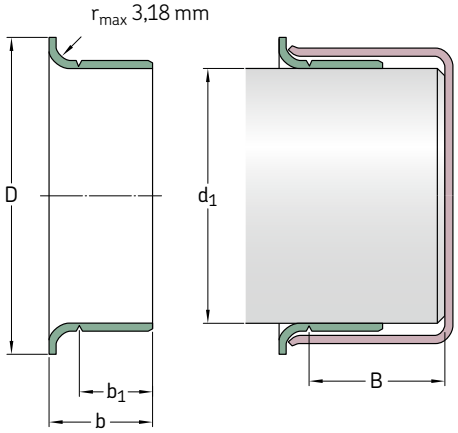

Shaft diameter range		Nominal dimensions					Designations
d_1 min	max	d_1	D ±1,6	b_1 ±0,8	b ±0,8	B[1]	
mm							–
69,60	**69,75**	69,67	77,85	19,84	23,83	31,75	**99273**
69,72	**69,88**	69,85	79,38	19,84	23,83	31,75	**99843**[2]
		69,85	79,38	19,84	23,83	31,75	**99274**
69,77	**69,93**	69,85	78,11	36,53	41,28	41,28	**99267**
69,85	**70,00**	69,85	79,38	10,31	14,30	31,75	**99272**
		69,85	79,38	19,84	23,83	31,75	**99844**[2]
		69,85	79,38	19,84	23,83	31,75	**99275**
		69,85	79,38	28,58	31,75	33,32	**99269**
69,93	**70,08**	70,00	79,38	19,99	24,00	31,75	**99276**
71,35	**71,50**	71,45	80,98	15,09	17,48	31,75	**99281**
71,83	**72,01**	72,01	81,92	19,05	22,23	34,11	**99870**[2]
		72,01	81,92	19,05	22,23	34,11	**99284**
72,09	**72,24**	72,09	81,92	12,70	16,66	31,75	**99845**[2]
		72,09	81,92	12,70	16,66	31,75	**99282**
72,80	**72,95**	72,87	80,98	19,84	23,83	31,75	**99286**
72,97	**73,13**	73,03	81,76	19,84	23,83	31,75	**99846**[2]
		73,03	81,76	19,84	23,83	31,75	**99287**
74,60	**74,75**	74,63	84,94	12,70	16,28	33,81	**99290**
		74,63	84,94	19,84	23,83	33,35	**99847**[2]
		74,68	84,94	19,84	23,83	33,35	**99293**
74,93	**75,08**	75,01	83,13	15,09	17,53	27,51	**99289**
		75,01	83,95	22,00	26,01	33,35	**99875**[2]
	90,07	89,99	101,60	11,13	13,67	46,05	**99352**
		75,01	83,95	22,00	26,01	33,35	**99294**
75,49	**75,59**	75,54	82,17	20,65	25,40	31,75	**99292**
75,95	**76,10**	76,02	85,32	12,29	15,88	33,81	**99291**
		76,02	85,32	14,30	17,48	34,93	**99298**
		76,02	85,09	20,65	25,40	32,54	**99299**
76,12	**76,28**	76,20	82,30	20,65	23,83	34,93	**99296**
76,20	**76,35**	76,20	84,96	15,88	20,65	32,51	**99048**[3]
		76,20	82,17	20,65	25,40	32,54	**99848**[2]
		76,20	82,17	20,65	25,40	32,54	**99300**

[1] Possible max. distance of the rear groove from the shaft end when the installation tool supplied with the sleeve is used
[2] SKF Speedi-Sleeve Gold
[3] Previously 99303

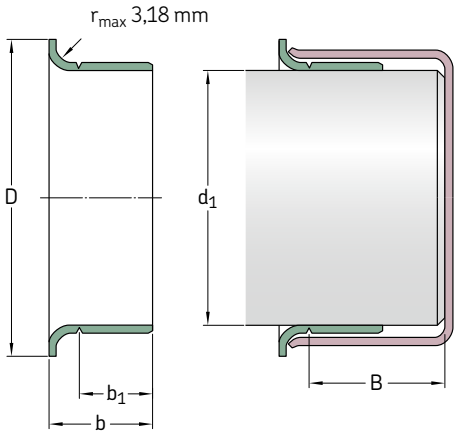

Shaft diameter range		Nominal dimensions					Designations
d_1 min	max	d_1	D ±1,6	b_1 ±0,8	b ±0,8	B[1]	
mm							–
76,40	**76,56**	76,48	85,22	12,70	15,88	50,80	**99301**
77,83	**78,00**	78,00	88,09	19,05	22,23	52,22	**99306**
79,25	**79,40**	79,38	89,69	17,48	20,65	50,80	**99311**
		79,38	89,69	20,65	25,40	50,80	**99849**[2]
		79,38	89,69	20,65	25,40	50,80	**99312**
79,35	**79,55**	79,38	89,54	14,00	18,01	51,59	**99053**[3]
79,81	**80,01**	80,01	89,92	19,05	22,50	34,93	**99313**
79,91	**80,09**	80,01	89,99	11,00	15,01	34,93	**99317**
		80,01	89,99	21,01	24,00	34,93	**99315**
81,92	**82,07**	81,99	91,06	16,76	21,54	44,45	**99328**
82,47	**82,63**	82,55	91,29	20,65	25,40	34,93	**99322**
82,55	**82,70**	82,55	90,81	15,11	18,26	34,93	**99850**[2]
		82,55	90,81	15,11	18,26	34,93	**99324**
		82,55	91,06	17,48	22,23	31,75	**99326**
		82,55	91,06	20,65	25,40	34,93	**99851**[2]
		82,55	91,06	20,65	25,40	34,93	**99325**
84,00	**84,15**	84,07	93,68	20,65	25,40	34,93	**99331**
84,76	**85,01**	84,89	93,98	16,99	21,01	35,00	**99332**
		84,89	93,98	21,01	24,99	35,00	**99872**[2]
		84,89	93,98	21,01	24,99	35,00	**99333**
84,79	**85,01**	85,01	90,93	10,13	12,67	36,35	**99334**
85,67	**85,83**	85,73	93,68	9,53	12,70	35,81	**99338**
		85,73	93,85	20,65	25,40	34,93	**99337**
87,25	**87,40**	87,33	97,64	19,84	23,01	35,71	**99339**
87,80	**88,00**	88,00	95,28	29,21	34,27	42,50	**99481**
88,32	**88,47**	88,39	97,41	19,84	23,01	35,71	**99340**
88,82	**88,98**	88,90	97,64	15,88	20,65	34,21	**99346**
88,90	**89,05**	88,90	97,16	7,95	12,70	34,21	**99347**
		88,90	97,64	20,65	25,40	34,21	**99852**[2]
		88,90	97,64	20,65	25,40	34,21	**99350**

[1] Possible max. distance of the rear groove from the shaft end when the installation tool supplied with the sleeve is used
[2] SKF Speedi-Sleeve Gold
[3] Previously 99307

SKF Speedi-Sleeve – metric dimensions (converted from inch dimensions)

d_1 **88,93–125,10** mm

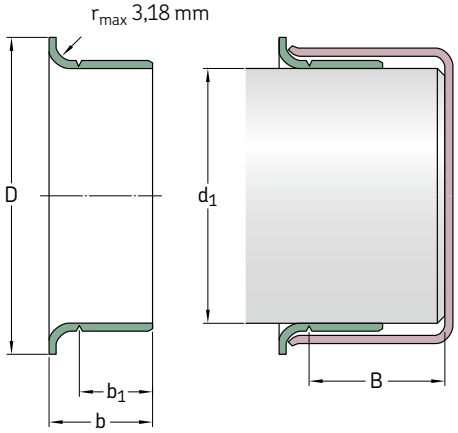

Shaft diameter range		Nominal dimensions					Designations
d_1 min	max	d_1	D ±1,6	b_1 ±0,8	b ±0,8	B[1]	
mm							–
88,93	**89,08**	89,00	97,64	15,88	20,65	34,24	**99349**
89,92	**90,07**	89,99	101,60	11,13	13,67	46,05	**99352**
		89,99	101,60	13,36	16,94	44,45	**99353**
		89,99	101,60	18,03	23,01	46,05	**99351**
		89,99	101,60	23,01	27,99	44,45	**99354**
90,42	**90,58**	90,50	99,06	20,65	25,40	44,45	**99356**
91,90	**92,05**	91,97	102,39	20,65	25,40	44,45	**99360**
92,02	**92,18**	92,08	102,24	12,70	15,88	44,45	**99363**
		92,08	102,39	20,65	25,40	44,45	**99362**
93,57	**93,73**	93,68	102,39	7,95	11,13	22,23	**99368**
93,60	**93,75**	93,68	102,24	20,65	23,83	45,72	**99365**
94,67	**94,82**	94,74	102,01	11,91	15,09	45,72	**99359**
		94,74	102,24	19,84	23,01	45,72	**99366**
94,92	**95,07**	95,00	102,24	21,01	24,00	45,72	**99369**
95,00	**95,15**	95,07	102,39	8,74	12,70	45,72	**99374**
		95,07	102,49	11,91	15,09	45,72	**99364**
95,15	**95,30**	95,22	102,24	14,30	17,48	45,72	**99376**
95,25	**95,40**	95,25	102,11	17,48	22,23	45,72	**99853**[2)3)]
		95,33	102,24	8,74	12,70	45,72	**99367**
		95,33	102,11	17,48	22,23	45,72	**99372**
98,25	**98,40**	98,32	106,30	20,65	25,40	47,63	**99386**
98,37	**98,53**	98,43	107,16	20,65	25,40	47,63	**99387**
99,95	**100,10**	100,03	109,55	20,65	25,40	52,07	**99854**[2)]
		100,03	109,55	20,65	25,40	52,07	**99393**
101,55	**101,75**	101,60	111,13	12,70	15,88	52,48	**99401**
		101,60	111,13	15,24	18,42	52,07	**99395**
		101,60	111,13	16,51	19,69	34,93	**99400**
	150,01	149,99	159,00	26,01	30,00	32,51	**99595**
		101,60	111,13	20,65	25,40	52,07	**99855**[2)]
		101,60	111,13	20,65	25,40	52,07	**99399**

[1] Possible max. distance of the rear groove from the shaft end when the installation tool supplied with the sleeve is used
[2] SKF Speedi-Sleeve Gold
[3] Previously 99372

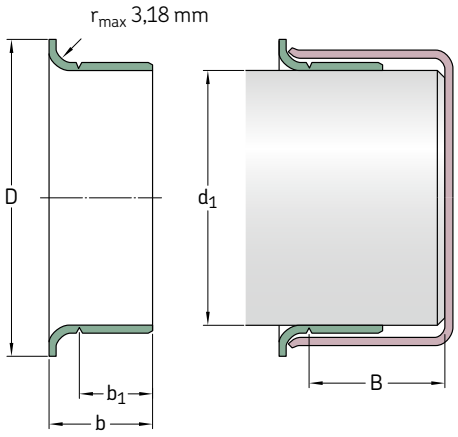

Shaft diameter range		Nominal dimensions					Designations
d_1 min	max	d_1	D ±1,6	b_1 ±0,8	b ±0,8	B[1]	
mm							–
103,89	**104,09**	103,99	112,73	19,99	24,00	35,99	**99409**
104,70	**104,90**	104,78	113,54	20,65	25,40	34,93	**99412**
104,90	**105,11**	105,00	113,54	19,99	23,19	35,00	**99413**
106,25	**106,45**	106,38	114,30	20,65	25,40	34,93	**99418**
107,34	**107,54**	107,54	117,09	19,84	23,01	36,53	**99423**
107,90	**108,10**	107,95	117,09	20,65	25,40	36,53	**99424**
109,78	**110,01**	110,01	124,99	11,38	14,96	32,94	**99434**
109,91	**110,11**	109,93	124,99	12,93	16,51	31,75	**99435**
111,00	**111,20**	111,13	120,65	20,65	25,40	41,91	**99437**
111,79	**111,99**	111,99	120,65	19,05	22,50	33,02	**99438**
112,62	**112,83**	112,73	122,25	25,40	29,01	33,35	**99439**
114,20	**114,40**	114,30 114,30	123,19 124,46	20,65 20,65	25,40 25,40	31,75 31,75	**99856**[2] **99450**
114,88	**115,09**	115,01	127,00	20,65	23,83	31,75	**99452**
117,37	**117,58**	117,48 117,48	127,00 128,60	11,13 25,40	15,88 31,75	34,93 34,93	**99465** **99463**
119,00	**119,20**	119,08	128,60	20,65	25,40	34,93	**99468**
119,89	**120,09**	119,99 119,99	129,79 129,79	8,00 19,99	11,00 24,99	33,60 32,00	**99471** **99473**
120,55	**120,75**	120,65	127,00	12,70	19,05	38,10	**99475**
121,89	**122,10**	122,00	131,50	19,99	24,00	32,00	**99472**
122,91	**123,11**	123,01	132,82	19,99	24,99	31,60	**99484**
123,72	**123,93**	123,83	133,35	15,88	19,05	36,53	**99487**
124,89	**125,10**	124,99 124,99	137,16 137,16	10,01 26,01	14,00 32,00	36,53 36,53	**99490** **99492**

[1] Possible max. distance of the rear groove from the shaft end when the installation tool supplied with the sleeve is used
[2] SKF Speedi-Sleeve Gold

SKF Speedi-Sleeve – metric dimensions (converted from inch dimensions)

d_1 **126,95–203,33** mm

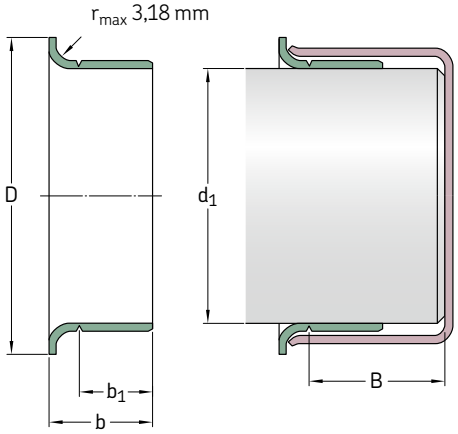

Shaft diameter range		Nominal dimensions					Designations
d_1 min	max	d_1	D ±1,6	b_1 ±0,8	b ±0,8	B[1]	
mm							–
126,95	**127,15**	127,00	137,16	13,72	17,30	36,53	**99501**
		127,00	137,16	17,48	22,23	36,53	**99857**[2]
		127,00	137,16	17,48	22,23	36,53	**99498**
		127,00	136,91	20,65	25,40	36,53	**99858**[2]
		127,00	136,91	20,65	25,40	36,53	**99499**
127,80	**128,00**	128,00	135,26	29,21	34,27	40,30	**99482**
129,79	**130,00**	129,90	139,52	19,05	23,83	30,00	**99494**
129,97	**130,18**	130,00	139,52	22,00	25,30	32,51	**99874**[2]
		130,18	139,52	22,00	25,30	32,51	**99491**
130,05	**130,25**	130,18	139,70	20,65	25,40	31,75	**99513**
133,25	**133,45**	133,35	141,22	20,65	25,40	31,75	**99525**
134,80	**135,00**	134,90	145,67	20,50	25,40	31,75	**99533**
136,42	**136,63**	136,53	149,23	20,65	25,40	31,75	**99537**
138,02	**138,23**	138,13	146,05	38,10	42,88	47,63	**99548**
138,99	**139,19**	139,09	149,86	14,30	19,05	31,34	**99547**
139,65	**139,85**	139,70	150,83	13,16	17,91	31,75	**99550**
		139,70	150,83	20,65	25,40	31,75	**99859**[2]
		139,70	150,83	20,65	25,40	31,75	**99549**
139,90	**140,11**	140,00	151,00	20,50	25,40	31,75	**99552**
142,77	**142,98**	142,88	157,18	22,23	25,40	46,02	**99560**
144,75	**145,01**	145,01	154,94	19,05	22,23	46,02	**99571**
145,44	**145,64**	145,64	154,94	14,30	19,05	49,23	**99562**
145,95	**146,15**	146,05	156,97	20,65	25,40	44,45	**99575**
149,12	**149,33**	149,23	157,18	25,40	31,75	33,35	**99862**[2]
		149,23	157,18	25,40	31,75	33,35	**99587**
149,76	**150,01**	149,99	159,00	26,01	30,00	32,51	**99595**
150,72	**150,93**	150,83	161,93	25,40	28,58	47,63	**99596**

[1] Possible max. distance of the rear groove from the shaft end when the installation tool supplied with the sleeve is used
[2] SKF Speedi-Sleeve Gold

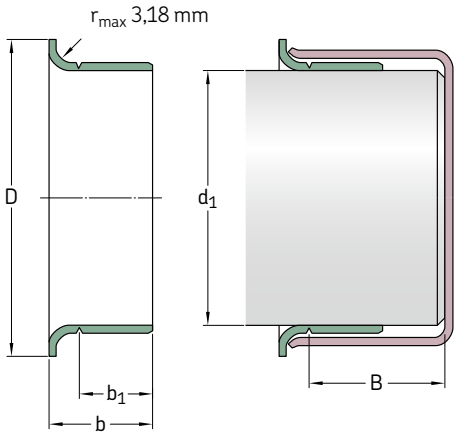

Shaft diameter range		Nominal dimensions					Designations
d_1 min	max	d_1	D ±1,6	b_1 ±0,8	b ±0,8	B[1]	
mm							–
152,27	**152,48**	152,40	161,54	12,70	19,05	44,45	**99601**
		152,40	161,93	25,40	31,75	44,45	**99599**
153,87	**154,13**	154,00	161,93	26,01	30,00	32,99	**99605**
154,74	**154,99**	154,86	167,01	26,01	30,00	32,99	**99606**
157,43	**157,68**	157,56	168,28	20,65	27,00	44,45	**99620**
158,62	**158,88**	158,75	168,28	26,19	31,75	44,45	**99625**
159,74	**159,99**	159,99	171,45	25,40	31,75	34,93	**99630**
164,97	**165,23**	165,10	177,80	25,40	31,75	34,93	**99650**
169,75	**170,00**	169,88	182,58	31,75	38,00	44,45	**99640**
171,32	**171,58**	171,45	180,98	20,65	27,00	44,45	**99675**
174,75	**175,01**	175,01	186,99	27,99	32,00	35,00	**99687**
177,67	**177,93**	177,80	189,87	25,40	31,75	42,88	**99864**[2]
		177,80	189,87	25,40	31,75	42,88	**99700**
179,76	**180,01**	180,01	190,50	32,99	38,00	44,50	**99721**
184,00	**184,25**	184,15	197,10	31,75	38,10	55,25	**99725**
184,73	**184,99**	184,86	197,10	32,00	38,00	54,99	**99726**
189,08	**189,33**	189,31	199,64	20,65	25,40	31,75	**99745**
190,37	**190,63**	190,50	200,03	20,65	25,40	31,75	**99750**
196,72	**196,98**	196,85	210,06	25,40	33,35	47,63	**99775**
199,87	**200,13**	200,03	212,73	34,52	38,10	44,45	**99787**
201,50	**201,75**	201,63	212,73	25,40	31,75	44,45	**99799**
203,07	**203,33**	203,20	212,73	25,40	31,75	44,45	**99800**

[1] Possible max. distance of the rear groove from the shaft end when the installation tool supplied with the sleeve is used
[2] SKF Speedi-Sleeve Gold

SKF Speedi-Sleeve – inch dimensions

d_1 **0.472–1.339** in.

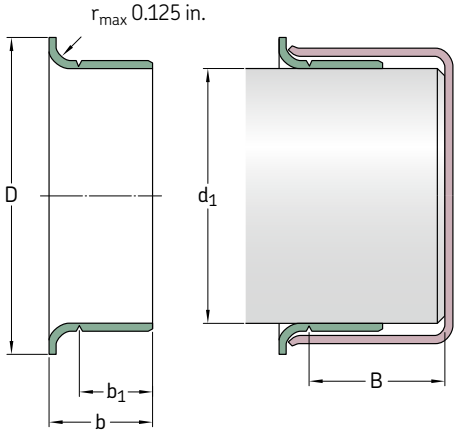

Shaft diameter range		Nominal dimensions					Designations
d_1 min	max	d_1	D ±0.063	b_1 ±0.031	b ±0.031	B[1]	
in.							–
0.472	**0.475**	0.472	0.610	0.236	0.331	1.875	**99049**
0.498	**0.502**	0.500	0.610	0.250	0.344	2.000	**99050**
0.547	**0.551**	0.551	0.750	0.250	0.391	1.831	**99055**
0.560	**0.566**	0.563	0.750	0.250	0.391	1.831	**99056**
0.589	**0.593**	0.591	0.750	0.197	0.354	1.862	**99059**
0.623	**0.627**	0.625 0.625	0.750 0.750	0.313 0.313	0.406 0.406	2.000 2.000	**99810**[2] **99062**
0.626	**0.630**	0.630	0.718	0.313	0.438	2.000	**99058**
0.667	**0.671**	0.669	0.875	0.315	0.433	2.000	**99068**
0.682	**0.686**	0.684	0.900	0.313	0.438	2.000	**99060**
0.704	**0.709**	0.709	0.962	0.315	0.433	1.811	**99082**
0.748	**0.752**	0.750 0.750	0.945 0.945	0.313 0.313	0.438 0.438	2.000 2.000	**99811**[2] **99076**
0.759	**0.761**	0.760	0.938	0.313	0.438	2.000	**99081**
0.780	**0.784**	0.781	0.935	0.313	0.438	2.000	**99080**
0.785	**0.789**	0.787	0.930	0.315	0.433	2.000	**99078**
0.812	**0.815**	0.813	1.188	0.375	0.563	3.000	**99083**
0.857	**0.861**	0.859	1.155	0.250	0.375	2.000	**99086**
0.861	**0.866**	0.866 0.866	1.188 1.188	0.259 0.315	0.359 0.472	1.856 1.812	**99084** **99085**
0.873	**0.877**	0.875 0.875	1.094 1.094	0.313 0.313	0.438 0.438	2.000 2.000	**99812**[2] **99087**
0.908	**0.912**	0.910 0.910	1.218 1.218	0.313 0.313	0.438 0.438	1.847 1.847	**99860**[2] **99091**
0.940	**0.945**	0.945	1.130	0.313	0.438	2.000	**99092**
0.966	**0.970**	0.969 0.969	1.130 1.130	0.313 0.625	0.438 0.719	2.000 2.000	**99094** **99096**

[1] Possible max. distance of the rear groove from the shaft end when the installation tool supplied with the sleeve is used
[2] SKF Speedi-Sleeve Gold

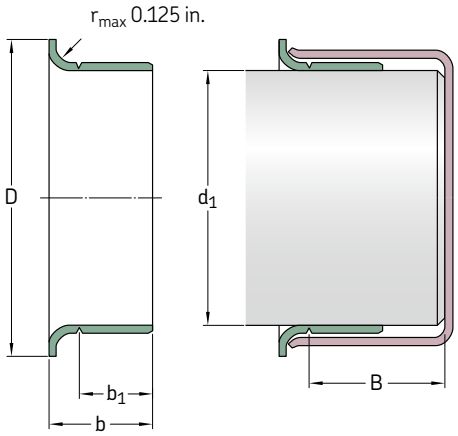

Shaft diameter range		Nominal dimensions					Designations
d_1 min	max	d_1	D ±0.063	b_1 ±0.031	b ±0.031	B[1]	
in.							–
0.982	**0.986**	0.984	1.300	0.313	0.433	2.000	**99813**[2]
		0.984	1.300	0.313	0.433	2.000	**99098**
0.998	**1.002**	1.000	1.219	0.313	0.438	2.000	**99814**[2]
		1.000	1.219	0.313	0.438	2.000	**99868**[3]
	111,20	111,13	120,65	20,65	25,40	41,91	**99437**
1.019	**1.024**	1.024	1.313	0.315	0.472	1.813	**99103**
1.060	**1.064**	1.063	1.320	0.313	0.438	1.843	**99815**[2]
		1.063	1.320	0.313	0.438	1.843	**99106**
1.087	**1.091**	1.089	1.406	0.313	0.438	0.625	**99108**
1.100	**1.104**	1.102	1.375	0.375	0.500	1.843	**99866**[2]
		1.102	1.375	0.375	0.500	1.843	**99111**
1.123	**1.127**	1.125	1.500	0.313	0.438	0.688	**99816**[2]
		1.125	1.500	0.313	0.438	0.688	**99112**
		1.125	1.500	0.375	0.500	0.688	**99116**
1.154	**1.158**	1.156	1.350	0.375	0.500	0.688	**99865**[2]
		1.156	1.350	0.375	0.500	0.688	**99120**
1.173	**1.178**	1.175	1.400	0.313	0.438	0.688	**99122**
1.179	**1.184**	1.181	1.400	0.315	0.433	0.688	**99114**
1.185	**1.190**	1.188	1.400	0.313	0.438	0.688	**99118**
1.216	**1.222**	1.219	1.563	0.313	0.433	0.625	**99123**
1.237	**1.243**	1.240	1.540	0.315	0.438	0.688	**99141**
1.247	**1.253**	1.250	1.500	0.313	0.438	0.688	**99817**[2]
		1.250	1.500	0.313	0.438	0.688	**99125**
1.257	**1.263**	1.260	1.500	0.315	0.438	0.688	**99128**
1.297	**1.301**	1.299	1.594	0.591	0.709	1.000	**99121**
1.308	**1.314**	1.313	1.600	0.250	0.375	0.813	**99129**
1.310	**1.316**	1.313	1.594	0.500	0.625	0.813	**99818**[2]
		1.313	1.594	0.500	0.625	0.813	**99131**
1.333	**1.339**	1.339	1.625	0.500	0.625	0.813	**99134**

[1] Possible max. distance of the rear groove from the shaft end when the installation tool supplied with the sleeve is used
[2] SKF Speedi-Sleeve Gold
3) Previously 99100

SKF Speedi-Sleeve – inch dimensions

d_1 **1.371–1.940** in.

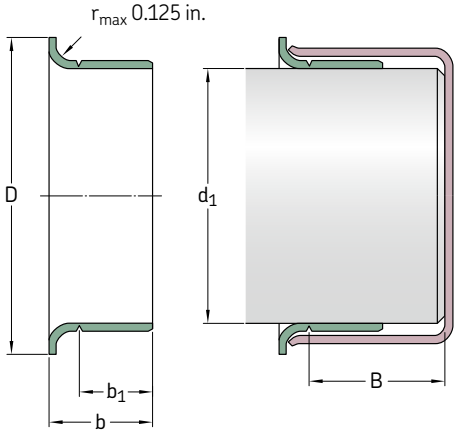

Shaft diameter range		Nominal dimensions					Designations
d_1 min	max	d_1	D ±0.063	b_1 ±0.031	b ±0.031	B[1]	
in.							–
1.371	**1.377**	1.375	1.638	0.313	0.438	0.813	**99133**
		1.375	1.638	0.500	0.625	0.813	**99819**[2]
		1.375	1.638	0.500	0.625	0.813	**99138**
1.375	**1.381**	1.375	1.638	0.512	0.630	0.813	**99820**[2]
		1.375	1.638	0.512	0.630	0.813	**99139**
1.411	**1.417**	1.417	1.781	0.512	0.669	0.984	**99146**
1.432	**1.438**	1.438	1.781	0.563	0.688	1.016	**99821**[2]
		1.438	1.781	0.563	0.688	1.016	**99143**
1.435	**1.441**	1.438	1.781	0.375	0.500	1.016	**99144**
1.490	**1.496**	1.496	1.781	0.512	0.669	0.984	**99147**
1.497	**1.503**	1.500	1.781	0.375	0.500	1.016	**99823**[2]
		1.500	1.781	0.375	0.500	1.016	**99150**
		1.500	1.781	0.563	0.688	1.016	**99822**[2]
		1.500	1.781	0.563	0.688	1.016	**99149**
1.520	**1.526**	1.523	1.859	0.438	0.563	1.016	**99152**
1.549	**1.555**	1.552	1.859	0.438	0.563	1.016	**99155**
1.559	**1.565**	1.562	1.859	0.563	0.688	1.016	**99824**[2]
		1.562	1.859	0.563	0.688	1.016	**99156**
1.566	**1.572**	1.569	1.859	0.625	0.750	1.016	**99159**
1.569	**1.575**	1.575	1.850	0.390	0.509	1.000	**99153**
1.572	**1.578**	1.578	1.850	0.512	0.630	1.023	**99825**[2]
		1.578	1.850	0.512	0.630	1.023	**99157**
1.602	**1.608**	1.605	1.938	0.500	0.641	1.000	**99160**
1.608	**1.614**	1.614	1.938	0.500	0.625	1.016	**99163**
1.622	**1.628**	1.625	1.875	0.313	0.438	1.016	**99161**
		1.625	1.875	0.563	0.688	0.813	**99826**[2]
		1.625	1.875	0.563	0.688	0.813	**99162**
1.647	**1.654**	1.650	2.087	0.445	0.571	0.846	**99166**
		1.650	2.087	0.563	0.689	0.827	**99169**
		1.654	2.087	0.563	0.689	0.827	**99873**[2]

[1] Possible max. distance of the rear groove from the shaft end when the installation tool supplied with the sleeve is used
[2] SKF Speedi-Sleeve Gold

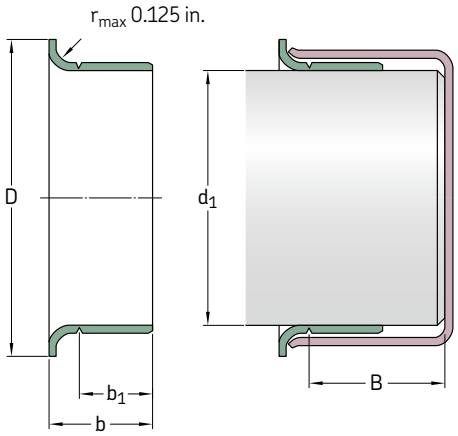

Shaft diameter range		Nominal dimensions					Designations
d_1 min	max	d_1	D ±0.063	b_1 ±0.031	b ±0.031	B[1]	
in.							–
1.653	**1.659**	1.656	2.087	0.550	0.689	0.827	**99165**
1.684	**1.690**	1.688	1.906	0.563	0.688	0.875	**99168**
1.685	**1.691**	1.688	1.906	0.313	0.438	0.875	**99167**
1.687	**1.693**	1.693	1.906	0.500	0.625	0.844	**99182**
1.715	**1.721**	1.719	2.031	0.563	0.688	0.813	**99171**
1.736	**1.742**	1.739	2.063	0.375	0.500	0.813	**99170**
1.747	**1.753**	1.750	2.055	0.375	0.500	0.813	**99172**
		1.750	2.063	0.531	0.625	0.878	**99180**
		1.750	2.063	0.563	0.688	0.813	**99827**[2]
		1.750	2.063	0.563	0.688	0.813	**99174**
		1.750	2.063	0.750	0.875	0.813	**99828**[2]
		1.750	2.063	0.750	0.875	0.813	**99175**
1.761	**1.767**	1.766	2.063	0.563	0.688	0.813	**99829**[2]
		1.766	2.063	0.563	0.688	0.813	**99176**
1.769	**1.775**	1.772	2.087	0.551	0.669	0.812	**99830**[2]
		1.772	2.087	0.551	0.669	0.812	**99177**
1.778	**1.784**	1.781	2.125	0.667	0.800	1.062	**99179**
1.809	**1.815**	1.813	2.090	0.563	0.688	1.000	**99831**[2]
		1.813	2.090	0.563	0.688	1.000	**99181**
1.857	**1.863**	1.859	2.156	0.563	0.688	1.000	**99185**
1.866	**1.872**	1.868	2.188	0.889	1.025	1.000	**99186**
1.872	**1.878**	1.875	2.203	0.175	0.295	0.744	**99190**
		1.875	2.203	0.295	0.415	0.744	**99188**
		1.875	2.203	0.375	0.516	1.050	**99184**
		1.875	2.203	0.563	0.688	1.000	**99832**[2]
		1.875	2.203	0.563	0.688	1.000	**99187**
1.887	**1.893**	1.891	2.205	0.551	0.668	0.984	**99189**
1.909	**1.915**	1.912	2.219	0.375	0.500	1.000	**99192**
1.934	**1.940**	1.938	2.219	0.563	0.688	1.000	**99833**[2]
		1.938	2.219	0.563	0.688	1.000	**99193**

[1] Possible max. distance of the rear groove from the shaft end when the installation tool supplied with the sleeve is used
[2] SKF Speedi-Sleeve Gold

SKF Speedi-Sleeve – inch dimensions

d_1 **1.965–2.746** in.

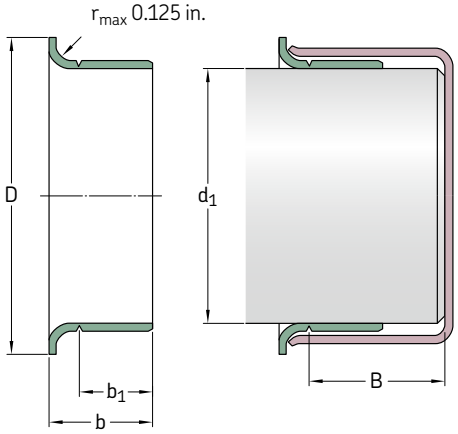

Shaft diameter range		Nominal dimensions					Designations
d_1 min	max	d_1	D ±0.063	b_1 ±0.031	b ±0.031	B[1]	
in.							–
1.965	**1.971**	1.969	2.244	0.551	0.668	1.350	**99052**
		1.969	2.244	0.551	0.668	0.984	**99196**
1.977	**1.983**	1.980	2.313	0.563	0.704	1.050	**99198**
1.997	**2.003**	2.000	2.406	0.563	0.688	1.006	**99834**[2]
		2.000	2.406	0.563	0.688	1.000	**99199**
		2.000	2.406	0.875	1.000	1.000	**99835**[2]
		2.000	2.406	0.875	1.000	1.000	**99200**
2.040	**2.047**	2.047	2.469	0.500	0.625	1.359	**99878**[3]
2.057	**2.063**	2.063	2.469	0.781	0.938	1.375	**99205**
2.123	**2.128**	2.125	2.422	0.500	0.750	1.281	**99210**
2.124	**2.130**	2.125	2.422	0.781	0.938	1.375	**99836**[2]
		2.125	2.422	0.781	0.938	1.375	**99212**
2.162	**2.168**	2.165	2.441	0.787	0.905	1.250	**99863**[2]
		2.165	2.441	0.787	0.905	1.250	**99215**
2.186	**2.192**	2.188	2.500	0.781	0.938	1.313	**99218**
2.198	**2.205**	2.205	2.531	0.500	0.625	1.313	**99220**
		2.205	2.531	0.779	0.936	3.150	**99224**
2.227	**2.233**	2.230	2.531	0.500	0.625	1.313	**99861**[2]
		2.230	2.531	0.500	0.625	1.313	**99229**
		2.230	2.531	0.781	0.906	1.250	**99230**
2.237	**2.243**	2.240	2.563	0.764	0.900	1.250	**99226**
2.249	**2.255**	2.250	2.531	0.313	0.438	1.313	**99838**[2]
		2.250	2.531	0.313	0.438	1.313	**99227**
		2.250	2.531	0.781	0.938	1.313	**99837**[2]
		2.250	2.531	0.781	0.938	1.313	**99225**
2.280	**2.286**	2.283	2.598	0.787	0.938	1.375	**99219**
2.309	**2.315**	2.313	2.688	0.781	0.938	1.375	**99231**
2.327	**2.333**	2.328	2.750	0.750	0.875	1.500	**99233**

[1] Possible max. distance of the rear groove from the shaft end when the installation tool supplied with the sleeve is used
[2] SKF Speedi-Sleeve Gold
[3] Previously 99204

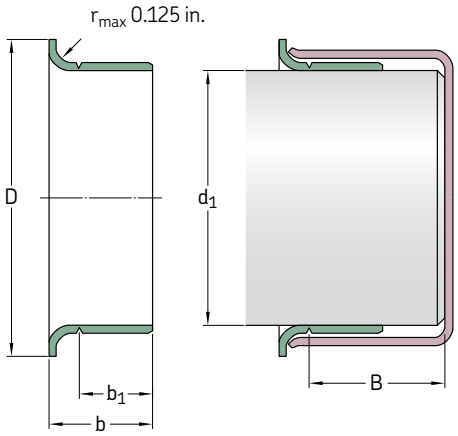

Shaft diameter range		Nominal dimensions					Designations
d_1 min	max	d_1	D ±0.063	b_1 ±0.031	b ±0.031	B[1]	
in.							–
2.359	**2.365**	2.362	2.785	0.370	0.450	1.471	**99241**
		2.362	2.785	0.787	0.905	1.375	**99869**[2]
		2.362	2.785	0.787	0.905	1.375	**99235**
2.372	**2.378**	2.375	2.750	0.594	0.750	1.375	**99238**
2.374	**2.380**	2.375	2.750	0.526	0.683	1.375	**99240**
		2.375	2.750	0.781	0.938	1.375	**99839**[2]
		2.375	2.750	0.781	0.938	1.375	**99237**
2.434	**2.441**	2.438	2.828	0.781	0.938	1.393	**99243**
		2.441	2.828	0.500	0.625	1.425	**99244**
2.435	**2.441**	2.438	2.828	0.500	0.625	1.425	**99242**
2.489	**2.495**	2.492	2.875	0.781	0.938	1.393	**99249**
2.497	**2.503**	2.500	2.820	0.555	0.650	0.890	**99253**
2.500	**2.506**	2.500	2.828	0.500	0.656	1.393	**99248**
		2.500	2.820	0.781	0.938	1.375	**99840**[2]
		2.500	2.820	0.781	0.938	1.375	**99250**
2.510	**2.516**	2.516	2.828	0.781	0.906	1.438	**99251**
2.556	**2.562**	2.559	2.850	0.787	0.905	1.375	**99841**[2]
		2.559	2.850	0.787	0.905	1.375	**99254**
2.560	**2.566**	2.563	2.891	0.781	0.938	1.375	**99256**
2.595	**2.601**	2.598	2.990	0.781	0.938	1.250	**99259**
2.618	**2.624**	2.621	3.047	0.781	0.938	1.375	**99261**
2.621	**2.627**	2.625	3.047	0.781	0.906	1.375	**99264**
2.622	**2.628**	2.625	3.047	0.500	0.625	1.375	**99260**
2.625	**2.631**	2.625	3.047	0.781	0.938	1.375	**99842**[2]
		2.625	3.047	0.781	0.938	1.375	**99262**
2.670	**2.677**	2.677	3.125	0.750	0.875	1.688	**99266**
2.727	**2.733**	2.730	3.125	0.781	0.906	1.313	**99268**
2.740	**2.746**	2.743	3.065	0.781	0.938	1.250	**99273**

[1] Possible max. distance of the rear groove from the shaft end when the installation tool supplied with the sleeve is used
[2] SKF Speedi-Sleeve Gold

SKF Speedi-Sleeve – inch dimensions

d_1 **2.745–3.506** in.

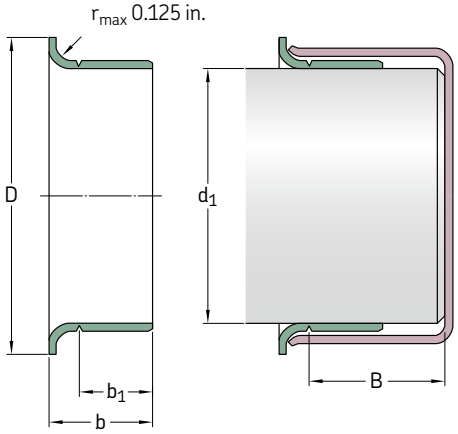

Shaft diameter range		Nominal dimensions					Designations
d_1 min	max	d_1	D ±0.063	b_1 ±0.031	b ±0.031	B[1]	
in.							–
2.745	**2.751**	2.750	3.125	0.781	0.938	1.250	**99843**[2]
		2.750	3.125	0.781	0.938	1.250	**99274**
2.747	**2.753**	2.750	3.075	1.438	1.625	1.625	**99267**
2.750	**2.756**	2.750	3.125	0.406	0.563	1.250	**99272**
		2.750	3.125	0.781	0.938	1.250	**99844**[2]
		2.750	3.125	0.781	0.938	1.250	**99275**
		2.750	3.125	1.125	1.250	1.312	**99269**
2.753	**2.759**	2.756	3.125	0.787	0.945	1.250	**99276**
2.809	**2.815**	2.813	3.188	0.594	0.688	1.250	**99281**
2.828	**2.835**	2.835	3.225	0.750	0.875	1.343	**99870**[2]
		2.835	3.225	0.750	0.875	1.343	**99284**
2.838	**2.844**	2.838	3.225	0.500	0.656	1.250	**99845**[2]
		2.838	3.225	0.500	0.656	1.250	**99282**
2.866	**2.872**	2.869	3.188	0.781	0.938	1.250	**99286**
2.873	**2.879**	2.875	3.219	0.781	0.938	1.250	**99846**[2]
		2.875	3.219	0.781	0.938	1.250	**99287**
2.937	**2.943**	2.938	3.344	0.500	0.641	1.331	**99290**
		2.938	3.344	0.781	0.938	1.313	**99847**[2]
		2.940	3.344	0.781	0.938	1.313	**99293**
2.950	**2.956**	2.953	3.273	0.594	0.690	1.083	**99289**
		2.953	3.305	0.866	1.024	1.313	**99875**[2]
		2.953	3.305	0.866	1.024	1.313	**99294**
2.972	**2.976**	2.974	3.235	0.813	1.000	1.250	**99292**
2.990	**2.996**	2.993	3.359	0.484	0.625	1.331	**99291**
		2.993	3.359	0.563	0.688	1.375	**99298**
		2.993	3.350	0.813	1.000	1.281	**99299**
2.997	**3.003**	3.000	3.240	0.813	0.938	1.375	**99296**
3.000	**3.006**	3.000	3.345	0.625	0.813	1.280	**99048**[3]
		3.000	3.235	0.813	1.000	1.281	**99848**[2]
		3.000	3.235	0.813	1.000	1.281	**99300**
3.008	**3.014**	3.011	3.355	0.500	0.625	2.000	**99301**

[1] Possible max. distance of the rear groove from the shaft end when the installation tool supplied with the sleeve is used
[2] SKF Speedi-Sleeve Gold
[3] Previously 99303

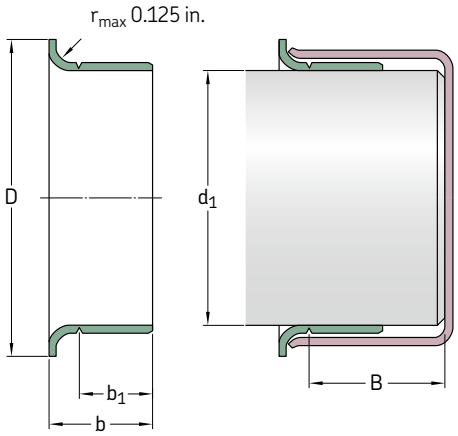

Shaft diameter range		Nominal dimensions					Designations
d_1 min	max	d_1	D ±0.063	b_1 ±0.031	b ±0.031	B[1]	
in.							–
3.064	**3.071**	3.071	3.468	0.750	0.875	2.056	**99306**
3.120	**3.126**	3.125	3.531	0.688	0.813	2.000	**99311**
		3.125	3.531	0.813	1.000	2.000	**99849**[2]
		3.125	3.531	0.813	1.000	2.000	**99312**
3.124	**3.132**	3.125	3.525	0.551	0.709	2.031	**99053**[3]
3.142	**3.150**	3.150	3.540	0.750	0.886	1.375	**99313**
3.146	**3.153**	3.150	3.543	0.433	0.591	1.375	**99317**
		3.150	3.543	0.827	0.945	1.375	**99315**
3.225	**3.231**	3.228	3.585	0.660	0.848	1.750	**99328**
3.247	**3.253**	3.250	3.594	0.813	1.000	1.375	**99322**
3.250	**3.256**	3.250	3.575	0.595	0.719	1.375	**99850**[2]
		3.250	3.575	0.595	0.719	1.375	**99324**
		3.250	3.585	0.688	0.875	1.250	**99326**
		3.250	3.585	0.813	1.000	1.375	**99851**[2]
		3.250	3.585	0.813	1.000	1.375	**99325**
3.307	**3.313**	3.310	3.688	0.813	1.000	1.375	**99331**
3.337	**3.347**	3.342	3.700	0.669	0.827	1.378	**99332**
		3.342	3.700	0.827	0.984	1.378	**99872**[2]
		3.342	3.700	0.827	0.984	1.378	**99333**
3.338	**3.347**	3.347	3.580	0.399	0.499	1.431	**99334**
3.373	**3.379**	3.375	3.688	0.375	0.500	1.410	**99338**
		3.375	3.695	0.813	1.000	1.375	**99337**
3.435	**3.441**	3.438	3.844	0.781	0.906	1.406	**99339**
3.457	**3.465**	3.465	3.751	1.150	1.349	1.673	**99481**
3.477	**3.483**	3.480	3.835	0.781	0.906	1.406	**99340**
3.497	**3.503**	3.500	3.844	0.625	0.813	1.347	**99346**
3.500	**3.506**	3.500	3.825	0.313	0.500	1.347	**99347**
		3.500	3.844	0.813	1.000	1.347	**99852**[2]
		3.500	3.844	0.813	1.000	1.347	**99350**

[1] Possible max. distance of the rear groove from the shaft end when the installation tool supplied with the sleeve is used
[2] SKF Speedi-Sleeve Gold
[3] Previously 99307

SKF Speedi-Sleeve – inch dimensions

d_1 **3.501–4.925** in.

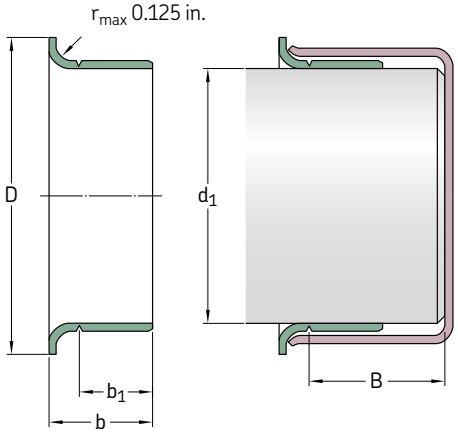

Shaft diameter range		Nominal dimensions					Designations
d_1 min	max	d_1	D ±0.063	b_1 ±0.031	b ±0.031	B[1]	
in.							–
3.501	**3.507**	3.504	3.844	0.625	0.813	1.348	**99349**
3.540	**3.546**	3.543	4.000	0.438	0.538	1.813	**99352**
		3.543	4.000	0.526	0.667	1.750	**99353**
		3.543	4.000	0.710	0.906	1.813	**99351**
		3.543	4.000	0.906	1.102	1.750	**99354**
3.560	**3.566**	3.563	3.900	0.813	1.000	1.750	**99356**
3.618	**3.624**	3.621	4.031	0.813	1.000	1.750	**99360**
3.623	**3.629**	3.625	4.025	0.500	0.625	1.750	**99363**
		3.625	4.031	0.813	1.000	1.750	**99362**
3.684	**3.690**	3.688	4.031	0.313	0.438	0.875	**99368**
3.685	**3.691**	3.688	4.025	0.813	0.938	1.800	**99365**
3.727	**3.733**	3.730	4.016	0.469	0.594	1.800	**99359**
		3.730	4.025	0.781	0.906	1.800	**99366**
3.737	**3.743**	3.740	4.025	0.827	0.945	1.800	**99369**
3.740	**3.746**	3.743	4.031	0.344	0.500	1.800	**99374**
		3.743	4.035	0.469	0.594	1.800	**99364**
3.746	**3.752**	3.749	4.025	0.563	0.688	1.800	**99376**
3.750	**3.756**	3.750	4.020	0.688	0.875	1.800	**99853**[2)3)]
		3.753	4.025	0.344	0.500	1.800	**99367**
		3.753	4.020	0.688	0.875	1.800	**99372**
3.868	**3.874**	3.871	4.185	0.813	1.000	1.875	**99386**
3.873	**3.879**	3.875	4.219	0.813	1.000	1.875	**99387**
3.935	**3.941**	3.938	4.313	0.813	1.000	2.050	**99854**[2)]
		3.938	4.313	0.813	1.000	2.050	**99393**
3.998	**4.006**	4.000	4.375	0.500	0.625	2.066	**99401**
		4.000	4.375	0.600	0.725	2.050	**99395**
		4.000	4.375	0.650	0.775	1.375	**99400**
		4.000	4.375	0.813	1.000	2.050	**99855**[2)]
		4.000	4.375	0.813	1.000	2.050	**99399**
4.090	**4.098**	4.094	4.438	0.787	0.945	1.417	**99409**

1) Possible max. distance of the rear groove from the shaft end when the installation tool supplied with the sleeve is used
2) SKF Speedi-Sleeve Gold
3) Previously 99372

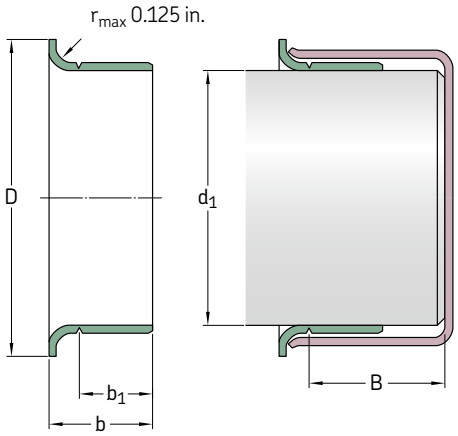

Shaft diameter range		Nominal dimensions					Designations
d_1 min	max	d_1	D ±0.063	b_1 ±0.031	b ±0.031	B[1]	
in.							–
4.122	**4.130**	4.125	4.470	0.813	1.000	1.375	**99412**
4.130	**4.138**	4.134	4.470	0.787	0.913	1.378	**99413**
4.183	**4.191**	4.188	4.500	0.813	1.000	1.375	**99418**
4.226	**4.234**	4.234	4.610	0.781	0.906	1.438	**99423**
4.248	**4.256**	4.250	4.610	0.813	1.000	1.438	**99424**
4.322	**4.331**	4.331	4.921	0.448	0.589	1.297	**99434**
4.327	**4.335**	4.328	4.921	0.509	0.650	1.250	**99435**
4.370	**4.378**	4.375	4.750	0.813	1.000	1.650	**99437**
4.401	**4.409**	4.409	4.750	0.750	0.886	1.300	**99438**
4.434	**4.442**	4.438	4.813	1.000	1.142	1.313	**99439**
4.496	**4.504**	4.500 4.500	4.850 4.900	0.813 0.813	1.000 1.000	1.250 1.250	**99856**[2] **99450**
4.523	**4.531**	4.528	5.000	0.813	0.938	1.250	**99452**
4.621	**4.629**	4.625 4.625	5.000 5.063	0.438 1.000	0.625 1.250	1.375 1.375	**99465** **99463**
4.685	**4.693**	4.688	5.063	0.813	1.000	1.375	**99468**
4.720	**4.728**	4.724 4.724	5.110 5.110	0.315 0.787	0.433 0.984	1.323 1.260	**99471** **99473**
4.746	**4.754**	4.750	5.000	0.500	0.750	1.500	**99475**
4.799	**4.807**	4.803	5.177	0.787	0.945	1.260	**99472**
4.839	**4.847**	4.843	5.229	0.787	0.984	1.244	**99484**
4.871	**4.879**	4.875	5.250	0.625	0.750	1.438	**99487**
4.917	**4.925**	4.921 4.921	5.400 5.400	0.394 1.024	0.551 1.260	1.438 1.438	**99490** **99492**

[1] Possible max. distance of the rear groove from the shaft end when the installation tool supplied with the sleeve is used
[2] SKF Speedi-Sleeve Gold

SKF Speedi-Sleeve – inch dimensions

d_1 **4.998–8.005** in.

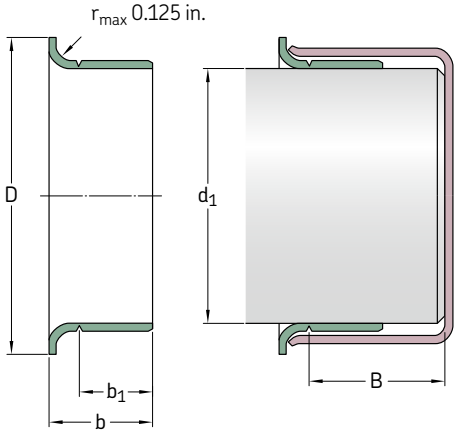

Shaft diameter range		Nominal dimensions					Designations
d_1 min	max	d_1	D ±0.063	b_1 ±0.031	b ±0.031	B[1]	
in.							–
4.998	**5.006**	5.000	5.400	0.540	0.681	1.438	**99501**
		5.000	5.400	0.688	0.875	1.438	**99857**[2]
		5.000	5.400	0.688	0.875	1.438	**99498**
		5.000	5.390	0.813	1.000	1.438	**99858**[2]
		5.000	5.390	0.813	1.000	1.438	**99499**
5.032	**5.039**	5.039	5.325	1.150	1.349	1.587	**99482**
5.110	**5.118**	5.114	5.493	0.750	0.938	1.181	**99494**
5.117	**5.125**	5.118	5.493	0.866	0.996	1.280	**99874**[2]
		5.125	5.493	0.866	0.996	1.280	**99491**
5.120	**5.128**	5.125	5.500	0.813	1.000	1.250	**99513**
5.246	**5.254**	5.250	5.560	0.813	1.000	1.250	**99525**
5.307	**5.315**	5.311	5.735	0.807	1.000	1.250	**99533**
5.371	**5.379**	5.375	5.875	0.813	1.000	1.250	**99537**
5.434	**5.442**	5.438	5.750	1.500	1.688	1.875	**99548**
5.472	**5.480**	5.476	5.900	0.563	0.750	1.234	**99547**
5.498	**5.506**	5.500	5.938	0.518	0.705	1.250	**99550**
		5.500	5.938	0.813	1.000	1.250	**99859**[2]
		5.500	5.938	0.813	1.000	1.250	**99549**
5.508	**5.516**	5.512	5.945	0.807	1.000	1.250	**99552**
5.621	**5.629**	5.625	6.188	0.875	1.000	1.812	**99560**
5.699	**5.709**	5.709	6.100	0.750	0.875	1.812	**99571**
5.726	**5.734**	5.734	6.100	0.563	0.750	1.938	**99562**
5.746	**5.754**	5.750	6.180	0.813	1.000	1.750	**99575**
5.871	**5.879**	5.875	6.188	1.000	1.250	1.313	**99862**[2]
		5.875	6.188	1.000	1.250	1.313	**99587**
5.896	**5.906**	5.905	6.260	1.024	1.181	1.280	**99595**
5.934	**5.942**	5.938	6.375	1.000	1.125	1.875	**99596**

[1] Possible max. distance of the rear groove from the shaft end when the installation tool supplied with the sleeve is used
[2] SKF Speedi-Sleeve Gold

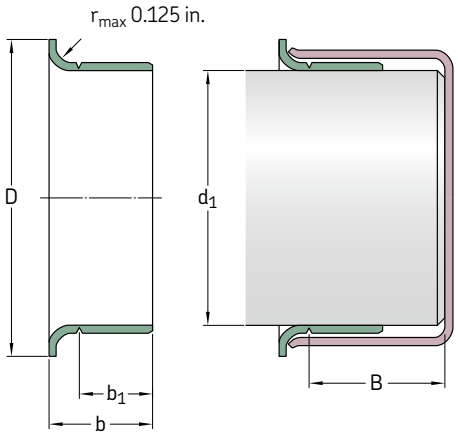

Shaft diameter range		Nominal dimensions					Designations
d_1 min	max	d_1	D ±0.063	b_1 ±0.031	b ±0.031	B[1]	
in.							–
5.995	**6.003**	6.000	6.360	0.500	0.750	1.750	**99601**
		6.000	6.375	1.000	1.250	1.750	**99599**
6.058	**6.068**	6.063	6.375	1.024	1.181	1.299	**99605**
6.092	**6.102**	6.097	6.575	1.024	1.181	1.299	**99606**
6.198	**6.208**	6.203	6.625	0.813	1.063	1.750	**99620**
6.245	**6.255**	6.250	6.625	1.031	1.250	1.750	**99625**
6.289	**6.299**	6.299	6.750	1.000	1.250	1.375	**99630**
6.495	**6.505**	6.500	7.000	1.000	1.250	1.375	**99650**
6.683	**6.693**	6.688	7.188	1.250	1.496	1.750	**99640**
6.745	**6.755**	6.750	7.125	0.813	1.063	1.750	**99675**
6.880	**6.890**	6.890	7.362	1.102	1.260	1.378	**99687**
6.995	**7.005**	7.000	7.475	1.000	1.250	1.688	**99864**[2]
		7.000	7.475	1.000	1.250	1.688	**99700**
7.077	**7.087**	7.087	7.500	1.299	1.496	1.752	**99721**
7.244	**7.254**	7.250	7.760	1.250	1.500	2.175	**99725**
7.273	**7.283**	7.278	7.760	1.260	1.496	2.165	**99726**
7.444	**7.454**	7.453	7.860	0.813	1.000	1.250	**99745**
7.495	**7.505**	7.500	7.875	0.813	1.000	1.250	**99750**
7.745	**7.755**	7.750	8.270	1.000	1.313	1.875	**99775**
7.869	**7.879**	7.875	8.375	1.359	1.500	1.750	**99787**
7.933	**7.943**	7.938	8.375	1.000	1.250	1.750	**99799**
7.995	**8.005**	8.000	8.375	1.000	1.250	1.750	**99800**

[1] Possible max. distance of the rear groove from the shaft end when the installation tool supplied with the sleeve is used
[2] SKF Speedi-Sleeve Gold

Wear sleeves for heavy industrial applications

Outside contamination particles and polishing friction between a rotating shaft and a seal can, over time, result in severe shaft damage. Instead of repairing or replacing the damaged shaft, SKF recommends the use of wear sleeves for heavy industrial applications (LDSLV), primarily in applications where no SKF Speedi-Sleeve is available, i.e. for shaft diameters ranging from 211,15 to 1 143 mm *(8.313 to 45 in.)*. The sleeves are made to order to fit shaft diameters within the primary ranges listed in **tables 1** and **2**. A selection of sizes is listed in the product tables starting on **page 38.**

The LDSLV designs are recommended for applications where the operating conditions for the seals are difficult, particularly where solid contaminants can reach the seals, like in rolling mills, primary metal plants and in chemical and mineral plants.

In applications where seal wear and shaft damage can be expected, SKF recommends that the wear sleeves be installed into the application from the outset. It will then not be necessary to rework the shaft before installing a replacement sleeve and the original size can be used for the replacement seal.

Table 5

Primary dimension range of LDSLV3

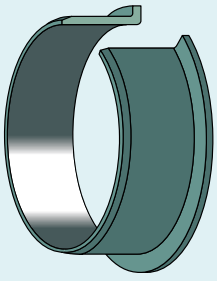

Shaft range over	incl.	**Width**[1] min	max
mm/*in.*			
211,15 *8.313*	736,60 *29.000*	17,48 *0.688*	63,50 *2.500*
736,60 *29.000*	1 143,00 *45.000*	25,40 *1.000*	63,50 *2.500*

1) Total width (b), 38,10 to 50,80 mm (*1.5 to 2 in.*) at 1 143,00 mm (*45 in.*) shaft diameter

Contact SKF for LDSLV3 designs outside the primary range.

Table 6

Primary dimension range of LDSLV4

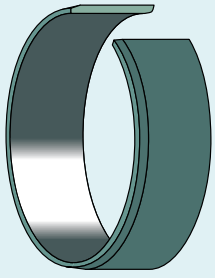

Shaft range over	incl.	**Width**[1] min	max
mm/*in.*			
211,15 *8.313*	736,60 *29.000*	17,48 *0.500*	63,50 *2.500*
736,60 *29.000*	1 143,00 *45.000*	19,05 *0.750*	63,50 *2.500*

1) Total width (b), 38,10 to 50,80 mm (*1.5 to 2 in.*) at 1 143,00 mm (*45 in.*) shaft diameter

Contact SKF for LDSLV4 designs outside the primary range.

Designs and features

There are two designs of SKF wear sleeves for heavy industrial applications; LDSLV3 with a flange (→ **fig. 1**) and LDSLV4 without a flange (→ **fig. 2**). Both designs are made of SAE 1008 chromium-plated carbon steel to enhance wear and corrosion resistance. Other sleeve materials can be provided to meet the demands of a specific application. The sleeve outside diameter is specially ground to provide a precision counterface surface for the seal. The wall thickness of the standard sleeves is 2,39 mm *(0.094 in.)*. LDSLV3 is designed with a flange to simplify final positioning of the sleeve. The width of the counterface for the seal is 6,35 mm *(0.25 in.)* narrower than the total width of the sleeve. The flange adds a nominal 25,4 mm *(1 in.)* over the shaft diameter. The flange height is 12,7 mm *(0.5 in.)* for all sizes. Note that force should never be applied directly to the flange when installing an LDSLV3.

LDSLV4 has the same features as LDSLV3 but has no flange. LDSLV4 is intended for applications where a flange could interfere with other components during installation, or where a wider contact surface for the seal is required.

Using LDSLV designs

There are two alternative ways of using SKF wear sleeves for heavy industrial applications (→ **fig. 3**);

1. The sleeve is positioned on the shaft until it covers the damaged part and a new seal, designed for a 4,78 mm *(0.188 in.)* larger shaft diameter is used.
2. The shaft is machined down by 4,78 mm *(0.188 in.)* in diameter, the sleeve is installed and the original seal size is used.

The reworked shaft surface for the sleeve should have a surface roughness of between R_a 2,5 and 3,2 µm *(100 to 125 µin.)*

NOTE: The shaft tolerances for LDSLV designs, due to their heated slip-fit installation, are different from those for radial shaft seals. Contact SKF for assistance if the sleeves are to be used in systems with sustained temperatures higher than 75 °C *(165 °F)* and surface speeds in excess of 20 m/s *(3 900 ft/min)*.

Installation

SKF wear sleeves for heavy industrial applications are designed for a heated slip-fit installation and must therefore be uniformly heated prior to installation on the shaft. The sleeve temperature should be approximately 180 °C *(355 °F)*. Under no circumstances should the sleeve be heated to above 200 °C *(390 °F)*. Any of the heating techniques normally used for bearings is suitable, e.g. induction heaters or heating cabinets.

The sleeves should be installed immediately after heating since they cool rapidly and could seize on the shaft before the correct position is achieved. If repositioning is necessary, use a soft faced hammer and a wooden block. After the sleeve is in the desired position, check the lead-in chamfer for any damage during installation.

Removal

Wear sleeves for heavy industrial applications can be removed either by heating them or expanding them by light hammer blows. Prior to removal, the flange of the LDSLV3 should first be cut through at one point, using care not to damage the shaft surface.

Fig. 1

LDSLV3

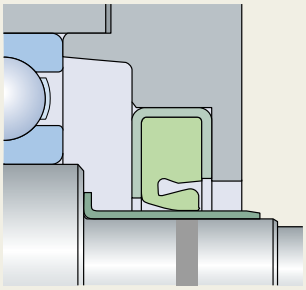

Fig. 1

LDSLV4

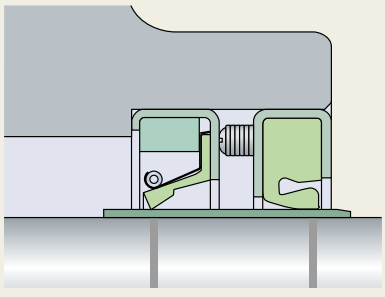

Fig. 1

Using LDSLV designs

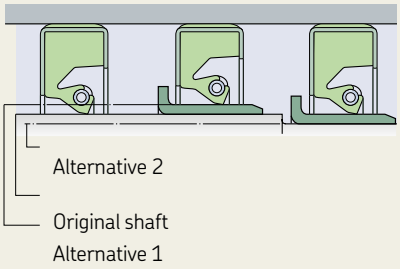

Wear sleeves for heavy industrial applications – LDSLV3 and LDSLV4 – metric dimensions

d_1 **215,00–1 100,23** mm

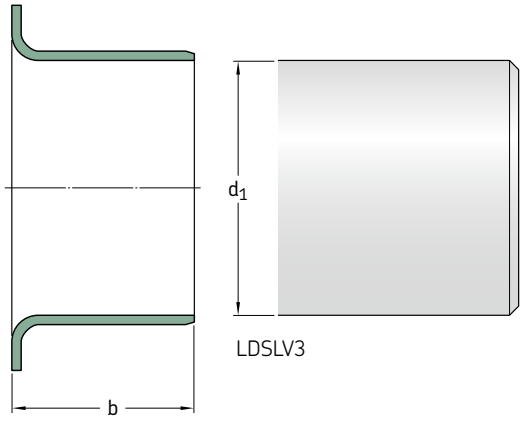

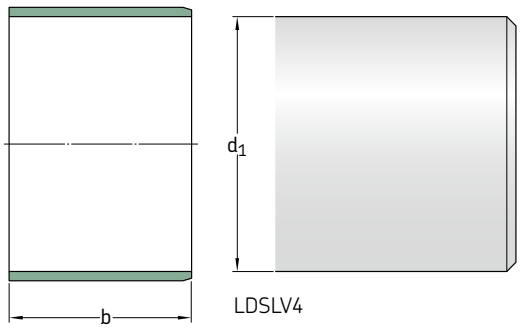

Shaft diameter	Sleeve width	Reference sleeve installed outside diameter	Design	Designations
d_1	b			
mm			–	
215,00	25,40	220	LDSLV3	90 179
215,20	35	220	LDSLV3	87 831
220,00	25	225	LDSLV3	90 806
	40	225	LDSLV3	87 914
	50,80	225	LDSLV3	87 915
235,23	18	240	LDSLV4	90 952
240,00	17,50	250	LDSLV3	90 156
240,21	44	245	LDSLV4	87 911
245,20	63,50	250	LDSLV3	90 766
275,00	22	280	LDSLV4	90 546
280,00	45	285	LDSLV4	90 437
285,22	63,50	290	LDSLV4	90 238
295,20	32	300	LDSLV3	90 114
315,19	63,50	320	LDSLV4	90 155
320,00	63,50	325	LDSLV4	90 198
325,22	63,50	330	LDSLV4	90 239
335,22	39	340	LDSLV4	90 777
	50	340	LDSLV4	90 792
340,00	18	340	LDSLV4	87 901
	50	340	LDSLV4	90 801
	50	345	LDSLV3	90 113
355,20	25,40	360	LDSLV4	90 778
	50	360	LDSLV4	90 785
360,00	44	365	LDSLV4	87 500
360,22	45	365	LDSLV4	90 788
365,20	20	370	LDSLV4	87 531
395,22	63,50	400	LDSLV4	87 461
405,23	50	410	LDSLV4	90 042
419,99	63,50	425	LDSLV3	97 064
435,20	63,50	440	LDSLV4	87 916
455,00	30	460	LDSLV4	90 347
455,20	50	460	LDSLV4	87 504
475,18	20	480	LDSLV4	87 921
494,44	24	500	LDSLV4	90 259
495,20	30	500	LDSLV4	87 503
503,25	24	508	LDSLV4	90 149
530,00	20	535	LDSLV4	87 783
535,23	63	540	LDSLV4	90 802
555,20	63,50	560	LDSLV4	90 075
575,23	63,50	580	LDSLV4	90 951
585,22	55	590	LDSLV4	90 292
595,20	58,20	600	LDSLV3	90 120
	63,50	600	LDSLV4	89 997
595,22	50	600	LDSLV3	90 241
645,20	64	650	LDSLV4	90 004
645,24	63,50	650	LDSLV3	87 817
665,20	45	670	LDSLV4	90 799
685,22	63,50	690	LDSLV4	90 953
714,81	50	720	LDSLV4	87 820
735,23	63	740	LDSLV4	89 949
755,19	63,50	760	LDSLV3	87 981

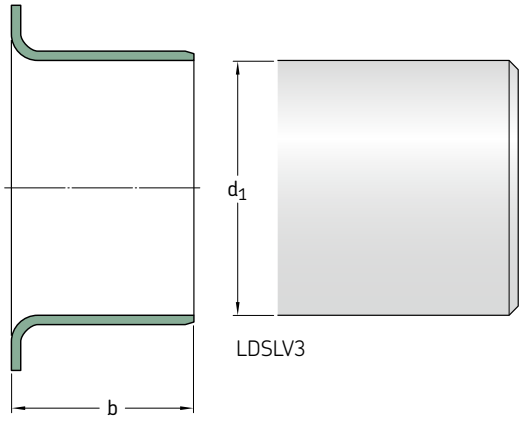

LDSLV3

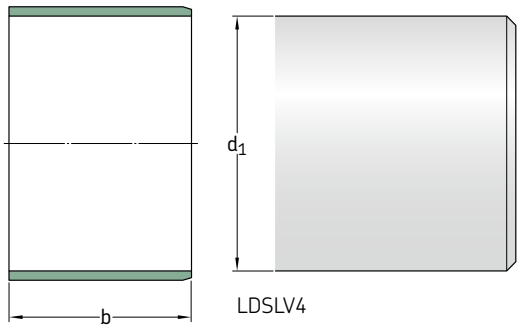

LDSLV4

Shaft diameter d_1	Sleeve width b	Reference sleeve installed outside diameter	Design	Designations
mm			–	
865,23	63,50	870	LDSLV4	90 221
875,18	63,50	880	LDSLV4	90 103
1 015,20	25	1 020	LDSLV4	90 786
1 049,33	60	1 054	LDSLV4	89 947
1 100,23	63	1 105	LDSLV4	89 946

Wear sleeves for heavy industrial applications – LDSLV3 and LDSLV4 – inch dimensions

d_1 **8.313–11.969** in.

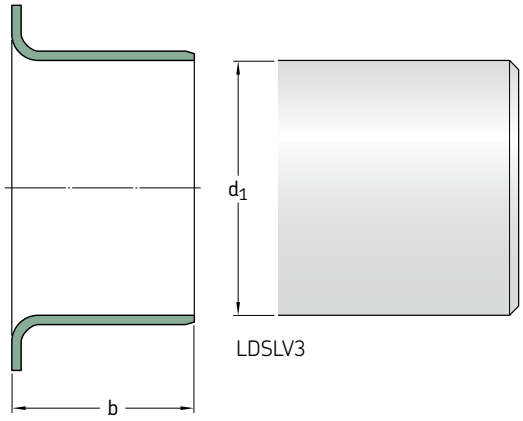

LDSLV3

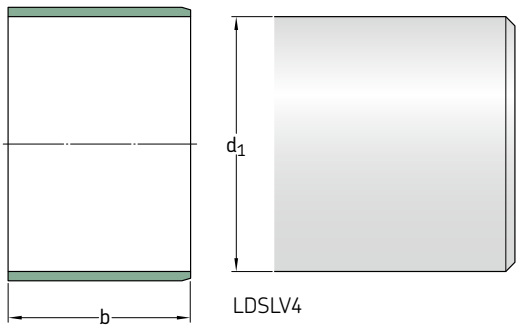

LDSLV4

Shaft diameter d_1	Sleeve width b	Reference sleeve installed outside diameter	Design	Designations
in./*mm*			–	
8.313 *211,15*	1.250 *31,75*	8.501 *215,93*	LDSLV4	**85 885**
8.353 *212,17*	1.500 *38,10*	8.541 *216,94*	LDSLV4	**86 907**
8.500 *215,90*	1.000 *25,40*	8.688 *220,68*	LDSLV3	**85 158**
8.625 *219,08*	2.750 *69,85*	8.813 *223,85*	LDSLV3	**85 643**
8.661 *220,00*	1.000 *25,40*	8.849 *224,76*	LDSLV4	**87 319**
8.687 *220,65*	2.250 *57,15*	8.875 *225,43*	LDSLV3	**86 543**
8.750 *222,25*	1.500 *38,10*	8.938 *227,03*	LDSLV3	**87 196**
8.812 *223,82*	2.000 *50,80*	9.000 *228,60*	LDSLV4	**86 551**
8.813 *223,85*	1.000 *25,40*	9.001 *228,63*	LDSLV3	**85 688**
8.866 *225,20*	2.500 *63,50*	9.054 *229,97*	LDSLV4	**87 166**
8.867 *225,22*	1.000 *25,40*	9.055 *230,00*	LDSLV4	**87 462**
8.875 *225,43*	1.250 *31,75*	9.063 *230,20*	LDSLV3	**85 973**
	1.250 *31,75*	9.063 *230,20*	LDSLV4	**87 526**
8.938 *227,03*	2.500 *63,50*	9.126 *231,80*	LDSLV4	**86 546**
9.000 *228,60*	1.000 *25,40*	9.188 *233,38*	LDSLV3	**87 555**
9.055 *230,00*	1.000 *25,40*	9.243 *234,77*	LDSLV3	**89 943**
9.063 *230,20*	1.500 *38,10*	9.251 *234,98*	LDSLV4	**85 931**

Shaft diameter d_1	Sleeve width b	Reference sleeve installed outside diameter	Design	Designations
in./*mm*			–	
9.125 *231,78*	1.000 *25,40*	9.313 *236,55*	LDSLV4	**86 547**
	1.500 *38,10*	9.313 *236,55*	LDSLV4	**90 130**
9.250 *234,95*	0.875 *22,23*	9.438 *239,73*	LDSLV4	**84 643**
9.260 *235,20*	1.102 *27,99*	9.448 *239,98*	LDSLV4	**87 789**
9.313 *236,55*	1.500 *38,10*	9.501 *241,33*	LDSLV3	**85 377**
9.449 *240,00*	1.181 *30,00*	9.637 *244,78*	LDSLV4	**87 144**
9.500 *241,30*	2.500 *63,50*	9.688 *246,08*	LDSLV4	**86 562**
	1.000 *25,40*	9.688 *246,08*	LDSLV3	**86 633**
9.563 *242,90*	1.000 *25,40*	9.751 *247,68*	LDSLV4	**85 073**
	2.000 *50,80*	9.751 *247,68*	LDSLV4	**85 397**
9.750 *247,65*	1.438 *36,53*	9.938 *252,43*	LDSLV4	**84 965**
	2.250 *57,15*	9.938 *252,43*	LDSLV4	**85 045**
9.813 *249,25*	1.125 *28,58*	10.001 *254,03*	LDSLV4	**86 413**
	2.000 *50,80*	10.001 *254,03*	LDSLV3	**84 156**
9.835 *249,81*	1.575 *40,01*	10.023 *254,58*	LDSLV4	**90 773**
10.000 *254,00*	1.000 *25,40*	10.188 *258,78*	LDSLV3	**90 070**
10.063 **255,60**	2.250 57,15	10.251 260,38	LDSLV4	**86 000**
10.188 *258,78*	1.125 *28,58*	10.376 *263,55*	LDSLV4	**84 962**

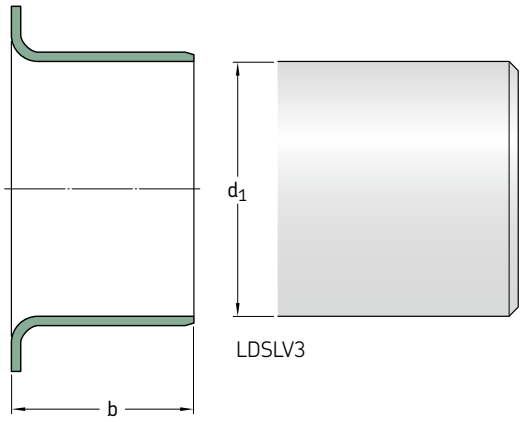

LDSLV3

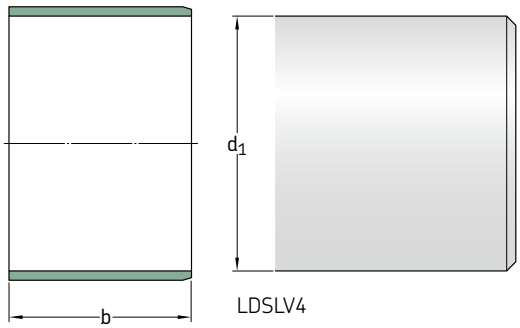

LDSLV4

Shaft diameter d_1	Sleeve width b	Reference sleeve installed outside diameter	Design	Designations
in./*mm*			–	
10.240 *260,00*	1.970 *50,00*	10.424 *264,77*	LDSLV3	**87 738**
10.313 *261,95*	2.000 *50,80*	10.501 *266,73*	LDSLV4	**85 629**
	2.250 *57,15*	10.501 *266,73*	LDSLV3	**85 191**
10.441 *265,20*	2.165 *54,99*	10.629 *269,98*	LDSLV4	**86 798**
10.500 *266,70*	2.750 *69,85*	10.688 *271,48*	LDSLV4	**86 013**
10.557 *268,15*	2.250 *57,15*	10.745 *272,92*	LDSLV4	**85 491**
10.562 *268,27*	0.984 *24,99*	10.750 *273,05*	LDSLV4	**90 800**
	1.750 *44,45*	10.750 *273,05*	LDSLV4	**86 468**
	1.813 *46,05*	10.750 *273,05*	LDSLV4	**86 544**
10.563 *268,30*	1.500 *38,10*	10.751 *273,08*	LDSLV4	**87 768**
10.750 *273,05*	2.500 *63,50*	10.938 *277,83*	LDSLV4	**86 435**
10.813 *274,65*	1.000 *25,40*	11.001 *279,43*	LDSLV3	**81 389**
	2.000 *50,80*	11.001 *279,43*	LDSLV4	**85 033**
10.846 *275,49*	0.709 *18,01*	11.034 *280,26*	LDSLV4	**86 601**
10.875 *276,23*	2.000 *50,80*	11.063 *281,00*	LDSLV4	**84 510**
11.000 *279,40*	1.500 *38,10*	11.188 *284,18*	LDSLV4	**86 486**
	2.500 *63,50*	11.188 *284,18*	LDSLV4	**86 454**
11.024 *280,00*	1.181 *30,00*	11.212 *284,78*	LDSLV4	**87 142**

Shaft diameter d_1	Sleeve width b	Reference sleeve installed outside diameter	Design	Designations
mm in./*mm*			–	
11.031 *280,19*	1.260 *32,00*	11.219 *284,96*	LDSLV4	**87 525**
11.062 *280,97*	1.750 *44,45*	11.250 *285,75*	LDSLV4	**85 469**
11.187 *284,15*	1.250 *31,75*	11.375 *288,93*	LDSLV4	**86 269**
11.188 *284,18*	2.250 *57,15*	11.376 *288,95*	LDSLV4	**85 212**
11.190 *284,23*	2.250 *57,15*	11.378 *289,00*	LDSLV4	**87 566**
11.313 *287,35*	1.500 *38,10*	11.501 *292,13*	LDSLV4	**84 094**
11.375 *288,93*	2.250 *57,15*	11.563 *293,70*	LDSLV4	**86 145**
11.417 *290,00*	1.750 *44,45*	11.605 *294,77*	LDSLV4	**86 441**
11.500 **292,10**	0.750 19,05	11.688 296,88	LDSLV4	**90 761**
11.562 *293,67*	1.000 *25,40*	11.750 *298,45*	LDSLV4	**90 333**
11.623 *295,22*	1.417 *35,99*	11.811 *300,00*	LDSLV3	**87 875**
11.750 *298,45*	2.375 *60,33*	11.938 *303,23*	LDSLV3	**87 872**
11.812 *300,02*	1.125 *28,58*	12.000 *304,80*	LDSLV4	**86 687**
11.813 *300,05*	1.500 *38,10*	12.001 *304,83*	LDSLV4	**85 979**
	2.250 *57,15*	12.001 *304,83*	LDSLV3	**84 819**
	2.750 *69,85*	12.001 *304,83*	LDSLV4	**85 844**
11.969 *304,00*	0.709 *18,00*	12.157 *308,79*	LDSLV4	**86 600**

Wear sleeves for heavy industrial applications – LDSLV3 and LDSLV4 – inch dimensions

d_1 **12.000–20.813** in.

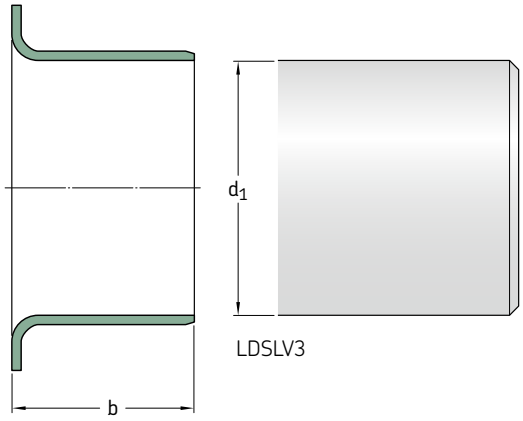

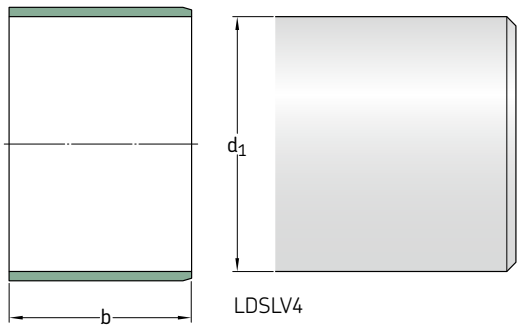

Shaft diameter d_1	Sleeve width b	Reference sleeve installed outside diameter	Design	Designations
in./*mm*			–	
12.000	2.250	12.188	LDSLV4	**85 577**
304,80	*57,15*	*309,58*		
	2.250	12.188	LDSLV3	**87 406**
	57,15	*309,58*		
12.063	0.625	12.251	LDSLV4	**85 418**
306,40	*15,88*	*311,18*		
	2.500	12.251	LDSLV3	**86 404**
	63,50	*311,18*		
12.312	1.500	12.500	LDSLV4	**90 174**
312,72	*38,10*	*317,50*		
12.313	0.750	12.501	LDSLV4	**83 760**
312,75	*19,05*	*317,53*		
12.500	2.125	12.688	LDSLV3	**86 169**
317,50	*53,98*	*322,28*		
12.598	0.984	12.786	LDSLV3	**87 434**
320,00	*25,00*	*324,76*		
12.750	0.688	12.938	LDSLV4	**87 513**
323,85	*17,48*	*328,63*		
	1.125	12.938	LDSLV3	**82 099**
	28,58	*328,63*		
	1.500	12.938	LDSLV3	**90 143**
	38,10	*328,63*		
12.813	1.000	13.001	LDSLV4	**86 258**
325,45	*25,40*	*330,23*		
	1.375	13.001	LDSLV4	**84 263**
	34,93	*330,23*		
	2.000	13.001	LDSLV3	**84 390**
	50,80	*330,23*		
	2.500	13.001	LDSLV4	**86 722**
	63,50	*330,23*		
13.000	1.750	13.188	LDSLV4	**85 535**
330,20	*44,45*	*334,98*		
13.063	1.125	13.251	LDSLV4	**84 963**
331,80	*28,58*	*336,53*		
13.313	0.813	13.501	LDSLV4	**86 688**
338,15	*20,65*	*342,93*		
	1.500	13.501	LDSLV4	**87 463**
	38,10	*342,93*		
	2.000	13.501	LDSLV3	**85 852**
	50,80	*342,93*		
13.813	1.500	14.001	LDSLV3	**81 390**
350,85	*38,10*	*355,63*		
	2.000	14.001	LDSLV4	**85 179**
	50,80	*355,63*		
14.000	1.375	14.188	LDSLV3	**89 951**
355,60	*34,93*	*360,38*		
	1.500	14.188	LDSLV3	**81 352**
	38,10	*360,38*		
14.173	1.000	14.361	LDSLV4	**87 445**
359,99	*25,40*	*364,77*		
14.313	1.500	14.501	LDSLV4	**86 429**
363,55	*38,10*	*368,33*		
14.438	2.500	14.626	LDSLV3	**86 403**
366,73	*63,50*	*371,50*		
14.500	1.000	14.688	LDSLV4	**85 914**
368,30	*25,40*	*373,08*		
14.813	1.500	15.001	LDSLV4	**87 723**
376,25	*38,10*	*381,03*		
	2.125	15.001	LDSLV3	**81 391**
	53,98	*381,03*		
15.000	1.000	15.188	LDSLV4	**87 247**
381,00	*25,40*	*385,78*		
15.062	0.750	15.250	LDSLV4	**90 272**
382,57	*19,05*	*387,35*		
15.066	1.000	15.254	LDSLV3	**87 871**
382,68	*25,40*	*387,45*		
15.188	2.500	15.376	LDSLV4	**87 569**
385,78	*63,50*	*390,55*		
15.250	0.750	15.438	LDSLV3	**84 964**
387,35	*19,05*	*392,13*		
15.560	0.906	15.748	LDSLV4	**85 582**
395,22	*23,01*	*400,00*		
15.812	2.500	16.000	LDSLV3	**87 634**
401,62	*63,50*	*406,40*		

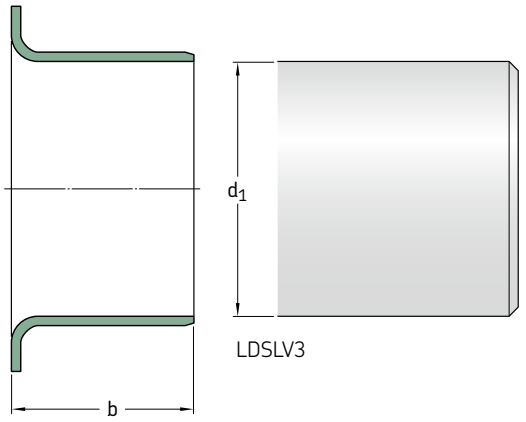

LDSLV3

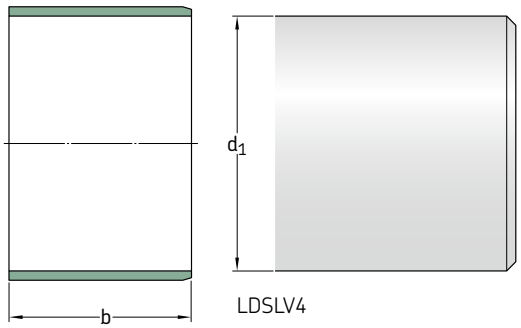

LDSLV4

Shaft diameter d_1	Sleeve width b	Reference sleeve installed outside diameter	Design	Designations
in./*mm*			–	
15.813	2.000	16.001	LDSLV4	**85 181**
401,65	*50,80*	*406,43*		
	2.000	16.001	LDSLV3	**87 446**
	50,80	*406,43*		
	2.500	16.001	LDSLV4	**86 407**
	63,50	406,43		
15.998	2.250	16.186	LDSLV3	**85 908**
406,35	*57,15*	*411,12*		
16.000	2.000	16.188	LDSLV3	**81 354**
406,40	50,80	411,18		
16.063	0.500	16.251	LDSLV4	**87 613**
408,00	*12,70*	*412,78*		
	1.250	16.251	LDSLV4	**86 175**
	31,75	*412,78*		
	1.300	16.251	LDSLV4	**86 426**
	33,02	*412,78*		
	2.000	16.251	LDSLV4	**86 575**
	50,80	*412,78*		
16.313	2.000	16.501	LDSLV4	**84 697**
414,35	*50,80*	*419,13*		
16.750	1.500	16.938	LDSLV4	**87 585**
425,45	*38,10*	*430,23*		
16.812	1.000	17.000	LDSLV4	**86 737**
427,02	*25,40*	*431,80*		
16.813	2.250	17.001	LDSLV4	**84 616**
427,05	*57,15*	*431,83*		
17.250	1.000	17.438	LDSLV4	**90 779**
438,15	*25,40*	*442,93*		
	2.000	17.438	LDSLV4	**84 576**
	50,80	*442,93*		
17.313	1.500	17.501	LDSLV4	**86 430**
439,75	*38,10*	*444,53*		
17.449	2.000	17.637	LDSLV4	**85 762**
443,20	*50,80*	*447,98*		
17.500	1.250	17.688	LDSLV4	**90 770**
444,50	*31,75*	*449,28*		

Shaft diameter d_1	Sleeve width b	Reference sleeve installed outside diameter	Design	Designations
mm in./*mm*			–	
17.543	2.362	17.731	LDSLV4	**86 799**
445,59	*59,99*	*450,37*		
17.750	1.250	17.938	LDSLV4	**90 774**
450,85	*31,75*	*455,63*		
	2.500	17.938	LDSLV3	**86 631**
	63,50	*455,63*		
17.812	2.125	18.000	LDSLV4	**87 271**
452,42	53,98	457,20		
17.813	2.500	18.001	LDSLV3	**86 405**
452,45	*63,50*	*457,23*		
18.163	2.000	18.351	LDSLV4	**86 343**
461,34	*50,80*	*466,12*		
18.312	1.191	18.500	LDSLV4	**90 790**
465,12	*30,25*	*469,90*		
18.813	1.750	19.001	LDSLV4	**86 563**
477,85	*44,45*	*482,63*		
	2.250	19.001	LDSLV4	**87 015**
	57,15	*482,63*		
	2.500	19.001	LDSLV4	**86 716**
	63,50	*482,63*		
19.496	2.362	19.684	LDSLV4	**87 631**
495,20	*59,99*	*499,97*		
19.497	1.575	19.685	LDSLV4	**87 785**
495,22	*40,01*	*500,00*		
19.500	1.250	19.688	LDSLV4	**90 769**
495,30	*31,75*	*500,08*		
19.563	2.750	19.751	LDSLV4	**85 654**
496,90	*69,85*	*501,68*		
19.813	1.250	20.001	LDSLV4	**84 781**
503,25	*31,75*	*508,03*		
20.312	1.000	20.500	LDSLV4	**86 739**
515,92	*25,40*	*520,70*		
20.813	1.250	21.001	LDSLV3	**85 800**
528,65	*31,75*	*533,43*		
	2.125	21.001	LDSLV4	**85 367**
	53,98	*533,43*		
	2.500	21.001	LDSLV4	**87 298**
	63,50	*533,43*		

Wear sleeves for heavy industrial applications – LDSLV3 and LDSLV4 – inch dimensions

d_1 **20.865–42.500** in.

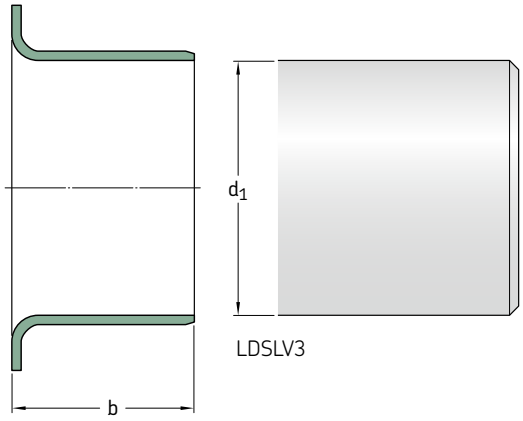

LDSLV3

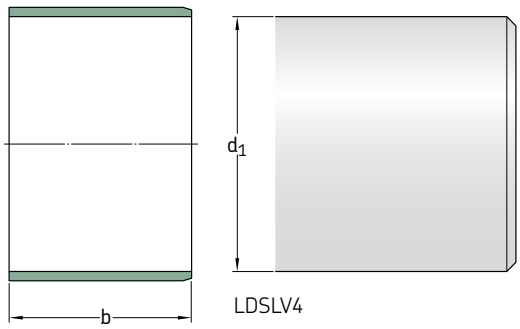

LDSLV4

Shaft diameter d_1	Sleeve width b	Reference sleeve installed outside diameter	Design	Designations
in./*mm*			–	
20.865 *529,97*	2.250 *57,15*	21.053 *534,75*	LDSLV4	**90 805**
20.990 **533,15**	2.250 57,15	21.178 537,92	LDSLV3	**84 579**
21.000 *533,40*	2.250 *57,15*	21.188 *538,18*	LDSLV4	**87 090**
21.803 *553,80*	2.362 *59,99*	21.991 *558,57*	LDSLV4	**87 069**
21.813 *554,05*	2.250 *57,15*	22.001 *558,83*	LDSLV4	**84 590**
22.250 *565,15*	1.000 *25,40*	22.438 *569,93*	LDSLV3	**85 691**
22.303 *566,50*	2.362 *59,99*	22.491 *571,27*	LDSLV4	**87 070**
22.313 *566,75*	1.250 *31,75*	22.501 *571,53*	LDSLV4	**85 907**
22.812 *579,42*	2.000 *50,80*	23.000 *584,20*	LDSLV4	**90 163**
23.000 *584,20*	2.000 *50,80*	23.188 *588,98*	LDSLV4	**90 146**
23.434 *595,22*	0.984 *24,99*	23.622 *600,00*	LDSLV4	**87 777**
23.687 *601,65*	1.950 *49,53*	23.875 *606,43*	LDSLV4	**87 907**
23.812 *604,82*	0.750 *19,05*	24.000 *609,60*	LDSLV4	**87 922**
	2.500 *63,50*	24.000 *609,60*	LDSLV4	**87 960**
25.000 *635,00*	2.500 *63,50*	25.188 *639,78*	LDSLV4	**86 567**
25.312 *642,92*	2.000 *50,80*	25.500 *647,70*	LDSLV4	**86 091**
25.313 *642,95*	2.500 *63,50*	25.501 *647,73*	LDSLV4	**87 802**

Shaft diameter d_1	Sleeve width b	Reference sleeve installed outside diameter	Design	Designations
in./*mm*			–	
26.000 *660,40*	2.250 *57,15*	26.188 *665,18*	LDSLV3	**86 640**
26.312 *668,32*	1.375 *34,93*	26.500 *673,10*	LDSLV4	**90 809**
26.813 *681,05*	1.250 *31,75*	27.001 *685,83*	LDSLV4	**85 384**
	2.250 *57,15*	27.001 *685,83*	LDSLV4	**85 531**
27.000 *685,80*	2.000 *50,80*	27.188 *690,58*	LDSLV4	**86 841**
27.063 *687,40*	2.250 *57,15*	27.251 *692,18*	LDSLV4	**84 764**
27.313 *693,75*	2.250 *57,15*	27.501 *698,53*	LDSLV4	**91 311**
27.500 *698,50*	2.250 *57,15*	27.688 *703,28*	LDSLV4	**84 711**
27.812 *706,42*	2.500 *63,50*	28.000 *711,20*	LDSLV4	**87 421**
28.312 *719,12*	2.313 *58,75*	28.500 *723,90*	LDSLV3	**87 623**
28.813 *731,85*	2.250 *57,15*	29.001 *736,63*	LDSLV4	**84 641**
29.813 *757,25*	2.250 *57,15*	30.001 *762,03*	LDSLV4	**84 642**
30.000 *762,00*	2.500 *63,50*	30.188 *766,78*	LDSLV3	**86 641**
30.309 *769,85*	1.375 *34,93*	30.497 *774,62*	LDSLV4	**87 530**
30.312 *769,92*	2.500 *63,50*	30.500 *774,70*	LDSLV3	**87 842**
30.813 *782,65*	2.000 *50,80*	31.001 *787,43*	LDSLV4	**85 039**

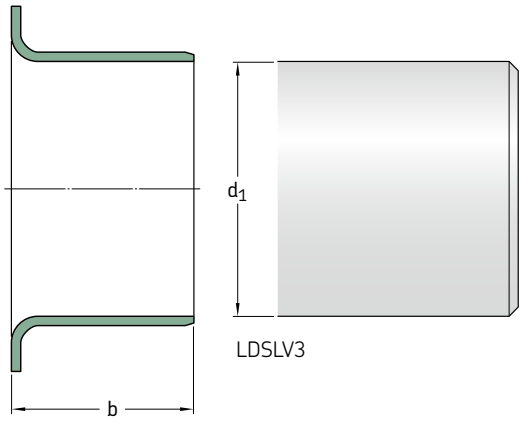

LDSLV3

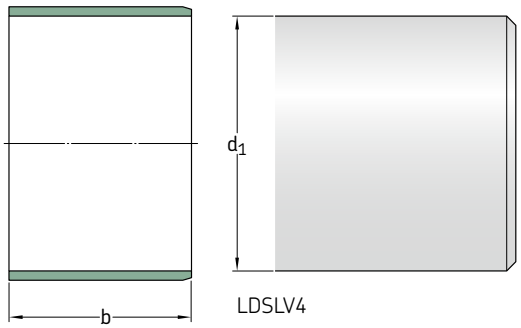

LDSLV4

Shaft diameter d_1	Sleeve width b	Reference sleeve installed outside diameter	Design	Designations
in./*mm*			–	
31.812 *808,02*	2.500 *63,50*	32.000 *812,80*	LDSLV4	**90 810**
32.313 *820,75*	2.000 *50,80*	32.501 *825,53*	LDSLV4	**86 090**
32.812 *833,42*	2.220 *56,39*	33.000 *838,20*	LDSLV4	**87 850**
33.313 *846,15*	2.625 *66,68*	33.501 *850,93*	LDSLV4	**84 730**
34.312 *871,52*	1.750 *44,45*	34.500 *876,30*	LDSLV4	**87 529**
35.313 *896,95*	2.500 *63,50*	35.501 *901,73*	LDSLV4	**85 814**
35.812 *909,62*	1.500 *38,10*	36.000 *914,40*	LDSLV4	**90 332**
36.375 *923,93*	2.500 *63,50*	36.563 *928,70*	LDSLV4	**86 111**
36.813 *935,05*	2.500 *63,50*	37.001 *939,83*	LDSLV4	**86 458**
37.813 **960,45**	1.500 38,10	38.001 965,23	LDSLV4	**86 973**
38.000 *965,20*	1.500 *38,10*	38.188 *969,98*	LDSLV4	**86 840**
38.500 *977,90*	1.500 *38,10*	38.688 *982,68*	LDSLV4	**81 753**
38.813 *985,85*	2.125 *53,98*	39.001 *990,63*	LDSLV4	**85 123**
39.813 *1 011,25*	2.125 *53,98*	40.001 *1 016,03*	LDSLV4	**81 826**
41.312 *1 049,32*	1.968 *49,99*	41.500 *1 054,10*	LDSLV4	**89 948**
42.063 *1 068,40*	2.125 *53,98*	42.251 *1 073,18*	LDSLV4	**85 038**

Shaft diameter d_1	Sleeve width b	Reference sleeve installed outside diameter	Design	Designations
mm in./*mm*			–	
42.125 *1 069,98*	2.125 *53,98*	42.313 *1 074,75*	LDSLV4	**87 054**
42.312 *1 074,72*	1.250 *31,75*	42.500 *1 079,50*	LDSLV4	**87 379**
42.500 *1 079,50*	1.250 *31,75*	42.688 *1 084,28*	LDSLV4	**87 392**

skf.com

® DURALIFE, SKF, SPEEDI-SLEEVE and WAVE are registered trademarks of the SKF Group.

© SKF Group 2021
The contents of this publication are the copyright of the publisher and may not be reproduced (even extracts) unless prior written permission is granted. Every care has been taken to ensure the accuracy of the information contained in this publication but no liability can be accepted for any loss or damage whether direct, indirect or consequential arising out of the use of the information contained herein.

PUB SE/P1 11337/3 EN • November 2021