Datenblatt - Fiche technique - Data sheet

11.04.5783



ROLINE DisplayPort Kabel DP – HDTV, ST/ST, 4,5m

ROLINE Câble DisplayPort DP – HDTV, M/M, 4,5m

ROLINE DisplayPort Cable, DP – HDTV, M/M, 4.5m

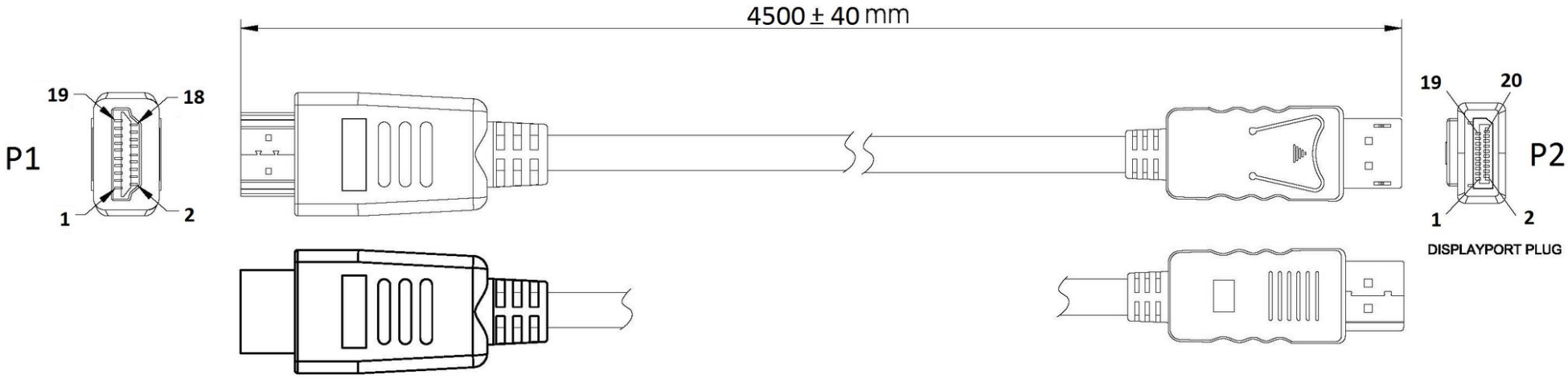

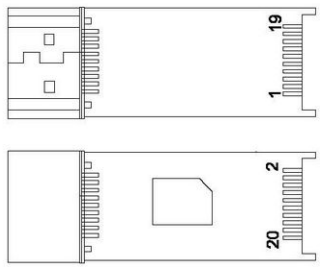

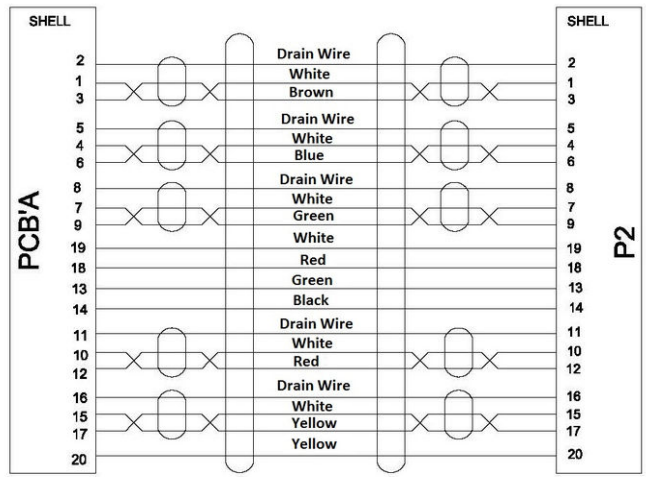

SPECIFICATION:

1. Cable: UL20276 (30AWGx1P + D + AL/MY)x5P + 30AWGx5C + F + ADB16/5/0.12(AL), Jacket PVC Black, OD=6.0±0.20mm(No LOGO)
2. Connector: DP(M), Soldering Type with Latch, Black Insulator, Nickel Plating
3. Case: DP(M) Black, Under Cover
4. Case: DP(M) Black, Upper Cover
5. Connector: DP to HDTV A/M Black Insulator, PCBA, Nickel Plating
6. Inner Mold: LDPE (RoHS)-PE101
7. Outer Mold: 60P Black PVC

REV.	DATE	CONTENTS OF CHANGE	DESIGNER
1			
2			
3			
4			
5			

TOL ± RANGE	Pla	Met	Ins	Por	V Cab	Pac	Gas	DIS
0~6	0.1	0.1	0.1	0.2	0.5	1	0.5	0.2
6~30	0.1	0.1	.15	.25	1	1	0.5	.25
30~80	0.1	.15	0.2	0.3	2	1.5	1	0.3
80~180	.15	.15	.25	0.3	2	2	1	.45
180~315	.15	0.2	0.3	0.4	2.5	2	1	0.6
315~800	0.2	0.3	0.4	0.5	3	3	2	1.1

APPROVAL	CHECK	DATE
PHILIP	PHILIP	2015-08-28

SCALE 1:1 UNIT MM

Item No. 11.04.5783

ROLINE DisplayPort Cable, DP-HDTV, M/M, 4.5m, black

SECOMP

A3