E20893

Mounting set for photoelectric sensors

SYSTEM COMPONENT OA BOLT

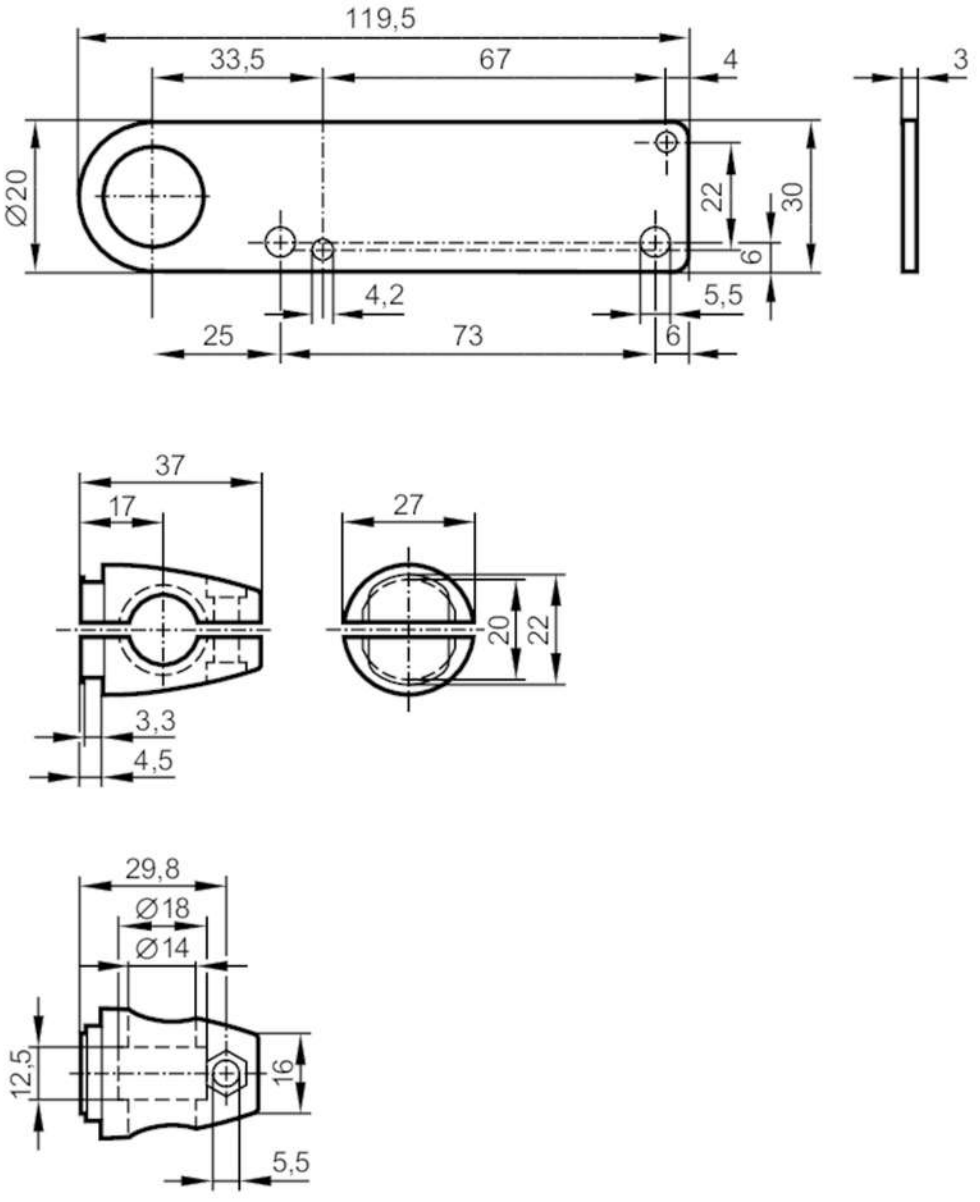

Application		
Design		clamp mounting
Mechanical data		
Weight	[g]	269
Type of mounting		free-standing; (M12)
Materials		fixture: stainless steel (1.4571/316Ti); Clamp: diecast zinc
Accessories		
Items supplied		screw: 1 x M12 x 55
Remarks		
Pack quantity		1 pcs.