StarTech.com

Hard-to-find made easy®

Flat-Screen TV Ceiling Mount - Short Pole - Full Motion

FPCEILPTBSP



*actual product may vary from photos

FR: Guide de l'utilisateur - fr.startech.com
DE: Bedienungsanleitung - de.startech.com
ES: Guía del usuario - es.startech.com
NL: Gebruiksaanwijzing - nl.startech.com
PT: Guia do usuário - pt.startech.com
IT: Guida per l'uso - it.startech.com

For the latest information, technical specifications, and support for this product, please visit www.StarTech.com/FPCEILPTBSP.

Manual Revision: 12/04/2018

Use of Trademarks, Registered Trademarks, and other Protected Names and Symbols

PHILLIPS® is a registered trademark of Phillips Screw Company in the United States or other countries.

This manual may make reference to trademarks, registered trademarks, and other protected names and/or symbols of third-party companies not related in any way to StarTech.com. Where they occur these references are for illustrative purposes only and do not represent an endorsement of a product or service by StarTech.com, or an endorsement of the product(s) to which this manual applies by the third-party company in question. Regardless of any direct acknowledgement elsewhere in the body of this document, StarTech.com hereby acknowledges that all trademarks, registered trademarks, service marks, and other protected names and/or symbols contained in this manual and related documents are the property of their respective holders.

Warning statements

Make sure to assemble this product according to the instructions. Failure to do so might result in personal injury or property damage.

Make sure that the weight of the monitor doesn't exceed the weight capacity of this product. If you exceed the weight capacity, you might experience personal injury or damage to the equipment. This product can support the following weight: Up to 50 kg (110 lb.).

Never operate this product if parts are missing or damaged.

Ceiling structures vary, and it's important to make sure that the type of ceiling structure and mounting hardware that you're using will properly support the mounted equipment. Failure to do so may result in personal injury and/or equipment damage. The ceiling structure should be capable of supporting at least four times the weight of the mounted equipment.

The mounting hardware included with this product might not be adequate for some ceiling structures. If you lack the necessary expertise to attach this product to the ceiling structure that you're using, contact a construction professional to install the ceiling mount or to provide specific mounting instructions for your ceiling structure.

Warnhinweise

Montieren Sie dieses Produkt gemäß den Anweisungen. Andernfalls kann dies zu Verletzungen von Personen oder Schäden an Eigentum führen.

Das Gewicht Ausrüstung darf die zulässige Traglast des Produkts nicht übersteigen. Wenn die Traglast überschritten wird, kann dies zu Verletzungen von Personen oder Schäden an Geräten führen. Dieses Produkt ist für folgendes Gewicht geeignet: 50 kg.

Das Produkt darf nicht bedient werden, wenn Teile fehlen oder beschädigt sind.

Deckenstruktur unterscheiden sich, und es muss sichergestellt werden, dass die Decke und das verwendete Montagematerial das montierte Gerät halten kann. Andernfalls kann dies zu Verletzungen von Personen und/oder Schäden an Geräten führen. Die Decke muss mindestens das Vierfache des Gewichts des montierten Geräts halten können.

Das mitgelieferte Montagematerial ist möglicherweise nicht für jede Decke geeignet. Wenn Ihnen die nötigen Fachkenntnisse zum Anbringen dieses Produkts an einer Decke fehlen, lassen Sie einen Fachmann den Deckenhalter anbringen, oder lassen Sie sich von einem Fachmann Montageanweisungen für Ihre Decke erteilen.

Waarschuwingen

Zorg dat dit product volgens de instructies in elkaar wordt gezet. Indien dit niet goed gebeurt kan lichamelijk letsel of materiële schade ontstaan.

Zorg dat het gewicht van de apparatuur de maximale capaciteit van dit product niet overschrijdt. Als u de gewichtscapaciteit overschrijdt, kan persoonlijk letsel of schade aan de apparatuur ontstaan. Dit product ondersteunt het volgende gewicht: 50 kg.

Gebruik dit product nooit als er onderdelen ontbreken of beschadigd zijn.

Omdat plafonds verschillen, is het belangrijk dat u ervoor zorgt dat de plafondstructuur en de montagemiddelen die u gebruikt de te monteren apparatuur goed ondersteunen. Indien u dit niet doet kan lichamelijk letsel en/of schade aan de apparatuur ontstaan. De plafondstructuur moet voldoende zijn om ten minste vier keer het gewicht van de gemonteerde apparatuur te ondersteunen.

Het kan zijn dat de bij dit product geleverde montagemiddelen niet geschikt zijn voor sommige plafondstructuren. Als u onvoldoende kennis hebt om dit product aan de door u gebruikte plafondstructuur te bevestigen, neem dan contact op met een bouwkundige om de steun aan de muur te installeren of specifieke montage-instructies voor uw plafondstructuur te geven.

Varningsmeddelanden

Se till att du monterar produkten i enlighet med instruktionerna. Om du inte gör det kan skada på person eller egendom uppstå.

Se till att utrustning vikt inte överstiger produktens viktkapacitet. Om viktkapaciteten överstigs kan skada på person eller utrustning uppstå. Denna produkt har stöd för följande vikter: 50 kg.

Använd aldrig produkten om delar saknas eller är skadade.

Eftersom innertakstrukturer varierar är det viktigt att kontrollera att innertakstrukturer och monteringsutrustningen som du använder klarar av den monterade utrustningen. Om du inte gör det kan skada på person och/eller utrustning uppstå. Innertakstrukturer ska kunna klara av minst fyra gånger vikten av den monterade utrustningen.

Monteringsutrustningen som medföljer produkten kanske inte är lämplig för vissa innertakstrukturer. Om du saknar nödvändiga kunskaper för att fästa denna produkt på innertakstrukturen som du använder, kontakta en professionell konstruktör för att installera utrustning eller för att ge specifika monteringsinstruktioner för din innertakstruktur.

Mensagens de aviso

Certifique-se de que monta este produto de acordo com as instruções. O incumprimento pode resultar em ferimentos pessoais ou danos de propriedade.

Certifique-se de que o peso do equipamento não excede a capacidade de peso deste produto. Se exceder a capacidade de peso, pode sofrer ferimentos pessoais ou danos no equipamento. Este produto pode suportar o seguinte peso: 50 kg.

Nunca opere este produto se faltarem peças ou estas estiverem danificadas.

As estruturas do teto variam e é importante certificar-se de que o tipo de estrutura do teto e hardware de montagem que está a usar irá suportar devidamente o equipamento montado. O incumprimento pode resultar em ferimentos pessoais e/ou danos no equipamento. A estrutura do teto deve ser capaz de suportar pelo menos quatro vezes o peso do equipamento montado.

O hardware de montagem incluído com este produto pode não ser adequado para algumas estruturas do teto. Se não tiver o conhecimento necessário para fixar este produto à estrutura do teto que está a usar, contacte um profissional de construção para fazer a instalação no teto ou para fornecer instruções de montagem específicas para a sua estrutura do teto.

Dichiarazioni di avvertenza

Assemblare il prodotto rispettando le istruzioni. Il mancato rispetto delle istruzioni potrebbe causare danni a persone o proprietà.

Verificare che il peso dell'attrezzatura non superi la capacità di supporto del prodotto. In caso di superamento della capacità di supporto potrebbero verificarsi danni a persone o apparecchiature. Il prodotto è in grado di supportare i seguenti pesi: 50 kg.

Non utilizzare il prodotto in presenza di parti mancanti o danneggiate.

Le caratteristiche il soffitto sono variabili ed è importante verificare che il soffitto e l'hardware di montaggio in uso siano in grado di supportare adeguatamente le apparecchiature montate. Il mancato rispetto delle istruzioni potrebbe causare danni a persone o proprietà. Il soffitto deve essere in grado di supportare un peso almeno quattro volte superiore a quello dell'apparecchiatura montata.

L'hardware di montaggio incluso con il prodotto potrebbe non essere adeguato ad alcun soffitto. Se l'utente non dispone delle competenze necessarie per agganciare il prodotto al soffitto in uso, dovrà contattare un professionista edile per installare il supporto a parete o ottenere istruzioni di montaggio per il soffitto in uso.

Advertencias de uso

Asegúrese de ensamblar este producto según las instrucciones. De lo contrario, pueden producirse lesiones personales o daños de propiedad.

Asegúrese de que el peso del equipo no excede la capacidad de carga de este producto. Si se excede dicha capacidad se podrían producirse lesiones personales o daños al equipo. Este producto tiene la siguiente capacidad de carga: 50 kilogramos.

Nunca opere o ponga en funcionamiento este producto si faltan piezas o hay daños en las mismas.

Las estructuras de los falsos techos pueden variar y, por tanto, es importante determinar con certeza que el tipo de estructura del falso techo y el hardware de montaje que se va a utilizar para soportar debidamente el equipo. De lo contrario, se pueden producir lesiones personales o daños en el mismo. La estructura del falso techo debe ser capaz de soportar al menos cuatro veces el peso del componente instalado.

El hardware de montaje incluido con este producto puede no ser adecuado para algunas estructuras de falso techo. Si no tiene la experiencia suficiente para fijar este producto a la estructura del falso techo correspondiente, póngase en contacto con un profesional de la construcción para instalar el soporte de falso techo o para que le proporcione las instrucciones específicas de montaje para su estructura de falso techo.

Avertissements

Assemblez ce produit conformément aux instructions. Si vous ne respectez pas ces instructions, vous risquez de vous blesser ou d'endommager l'équipement.

Vérifiez que le poids de l'équipement ne dépasse pas la capacité pondérale du produit. Si vous dépassez la capacité pondérale, vous risquez des blessures corporelles ou des dommages matériels. Ce produit peut supporter de 50 kg.

N'utilisez pas ce produit si des pièces sont endommagées ou manquantes.

Les types de plafonds varient. Vous devez impérativement vérifier que le type de plafond et le matériel de fixation que vous utilisez permettent de soutenir correctement l'équipement. Dans le cas contraire, vous risquez des blessures corporelles ou des dommages matériels. La structure du plafond doit pouvoir supporter au moins quatre fois le poids de l'équipement monté.

Le matériel de fixation inclus avec ce produit n'est pas forcément approprié pour tous les types de plafond. Si vous ne disposez pas des compétences nécessaires pour installer ce produit au plafond, contactez un professionnel afin qu'il installe l'équipment ou qu'il vous fournisse les instructions de montage spécifiques à votre type de plafond.

Table of Contents

Warnings i

Introduction 1

Product diagram 1

Product dimensions 2

Technical specifications 3

Package contents 4

Requirements 7

Installation 8

Attach the ceiling mount and pole to the ceiling 8

Attach the extension pole to the ceiling mount and pole 9

Attach the horizontal bracket 11

Prepare the vertical brackets 12

Mount a TV with a flush mounting surface 13

Mount a TV with a recessed mounting surface 14

Attach the TV to the horizontal bracket 16

Technical support 19

Warranty information 19

Introduction

Product diagram



Product dimensions

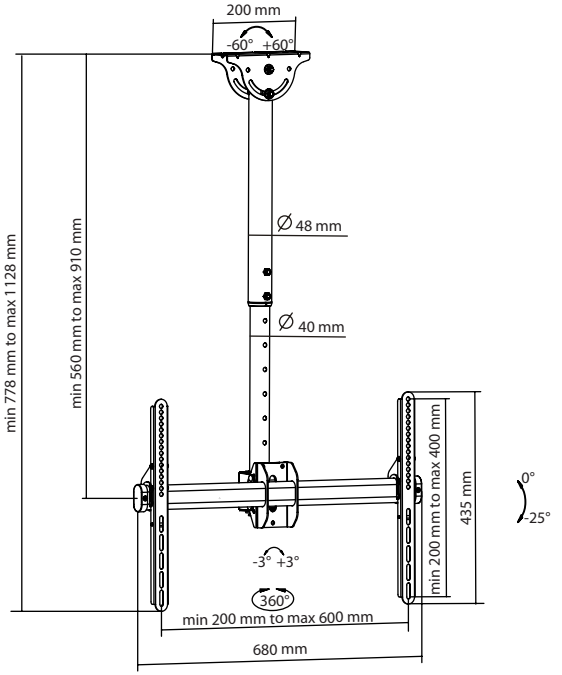

Technical specifications

Type of measurement	Measurement
VESA mounting hole pattern 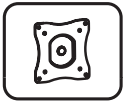	200x200 300x300 400x200 400x400 600x400
Rated load 	50 kg (110 lb.)
Tilt 	+0º to -25º
Screen size 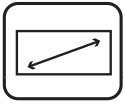	Between 813 mm and 1905 mm (32 in. and 75 in.)
Swivel 	360º

Package contents

1

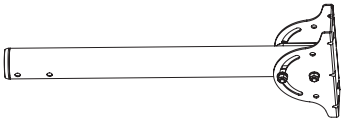

Ceiling mount and pole
Qty: One

2

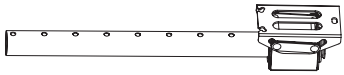

Extension pole
Qty: One

3



Horizontal bracket
Qty: One

4

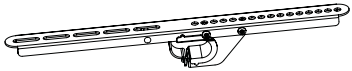

Vertical brackets
Qty: Two

5



Bolts
Qty: Two

6



Nuts
Qty: Two

7



Wrench
Qty: One

8



Hex key
Qty: One

9



Mounting template
Qty: One

10



M5x14 mm screws
Qty: Four

11



M6x14 mm screws
Qty: Four

12



M6x30 mm screws
Qty: Four

13

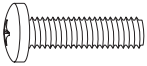

M8x30 mm screws
Qty: Four

14

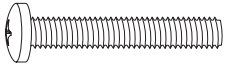

M8x50 mm screws
Qty: Four

15

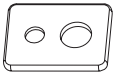

Rectangular washers
Qty: Four

16



Small spacers
Qty: Eight

17



Large spacers
Qty: Eight

18



6.3x55 mm screws
Qty: Four

19

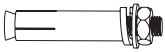

Concrete anchors

Qty: Four

20



Circular washers

Qty: Four

21



Instruction manual

Qty: One

Requirements

- A display or TV that is compatible with one of the VESA mounting hole patterns that FPCEILPTBSP supports
- A Phillips screwdriver

Requirements are subject to change. For the latest requirements, please visit www.StarTech.com/FPCEILPTBSP.

Installation

Warning! Make sure that the weight of the TV does not exceed the weight capacity of this product. If you exceed the weight capacity, you might experience personal injury or damage to the product. This product can support the following weight: Up to 50 kg (110 lb.).

Attach the ceiling mount and pole to the ceiling

Warning! Ceiling structures vary, and it is important to make sure that the type of structure and mounting hardware that you are using will properly support the mounted equipment. Failure to do so may result in personal injury and/or equipment damage. The ceiling should be capable of supporting at least four times the weight of the mounted equipment.

Warning! The mounting hardware included with this product might not be adequate for some ceiling structures. If you lack the necessary expertise to attach this product to the ceiling that you are using, contact a construction professional to install the FPCEILPTBSP or to provide specific mounting instructions for your ceiling.

The FPCEILPTBSP can be mounted to a flat or a sloped ceiling.

1. Use a pencil and the provided **mounting template** to mark the location on the ceiling where you want to attach the **ceiling mount and pole**. (*figure 1*)

figure 1

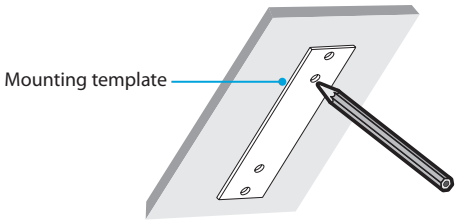

2. Follow the appropriate steps for the type of ceiling that you're attaching the mount to and attach the **ceiling mount and pole** to the ceiling.
3. To adjust the vertical position of the **pole**, use the **wrench** and the **hex key** to adjust the nut at the side of the mounting base. (*figure 2*)

figure 2

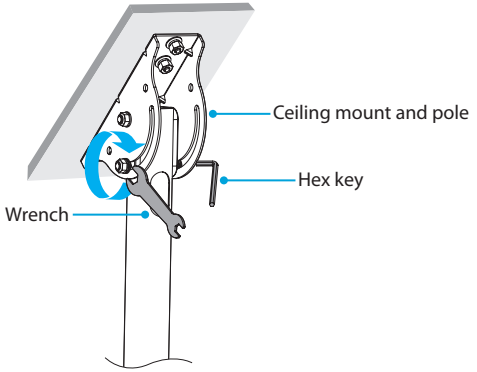

Attach the extension pole to the ceiling mount and pole

1. Place one end of the TV **cable** through the top hole in the **ceiling mount and pole**.
2. Run the **cable** through the **ceiling mount and pole**, the **extension pole**, and out the bottom of the **extension pole**. (*figure 3*)

figure 3

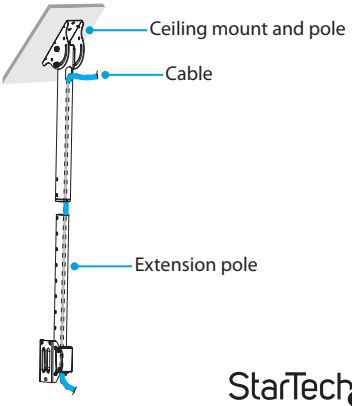

3. Slide the **extension pole** into the **ceiling mount and pole**, until the **extension pole** is at the desired height.
4. Line up the holes on the **extension pole** with the holes on the **ceiling mount and pole**.
5. Insert the two **bolts** through the holes in the **ceiling mount and pole** and the **extension pole**.
6. Attach the two **nuts** to the **bolts**, and use the **wrench** and the **hex key** to tighten the nuts in place. (*figure 4*)

figure 4

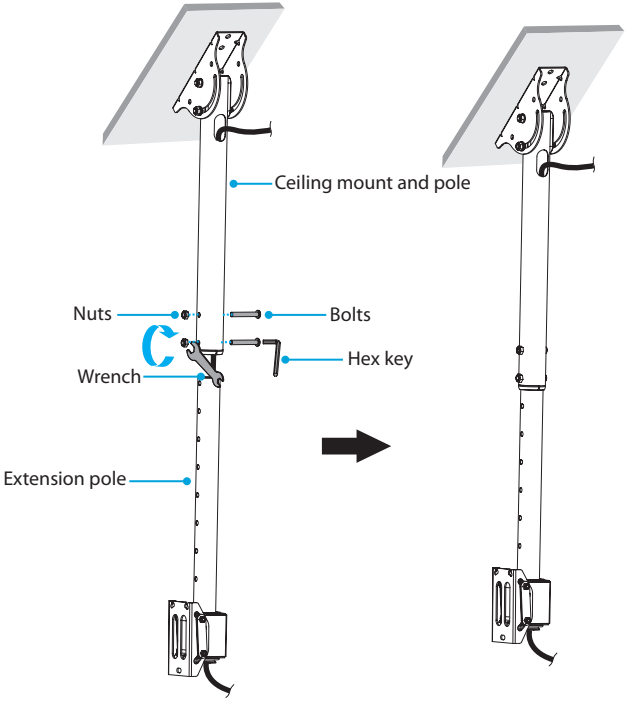

Attach the horizontal bracket

1. Use a **wrench** to remove the **retainer nut** from the back of the **horizontal bracket**. (*figure 5*)

figure 5

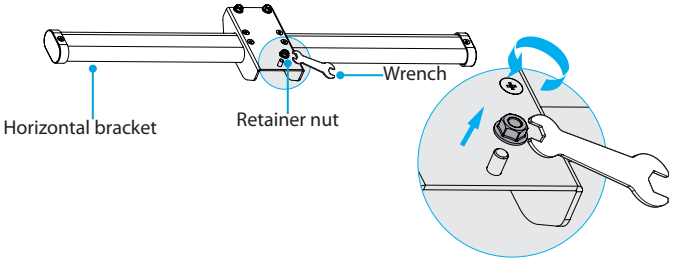

2. Loosen the two nuts at the back of the **horizontal bracket**.
3. Attach the **horizontal bracket** onto the mounting bracket at the end of the **extension pole**.
4. Reattach the **retainer nut** that you removed in step 1 and use a **wrench** to tighten the **nut** in place. (*figure 6*)
5. Tighten the two nuts that you loosened in step 2.

figure 6

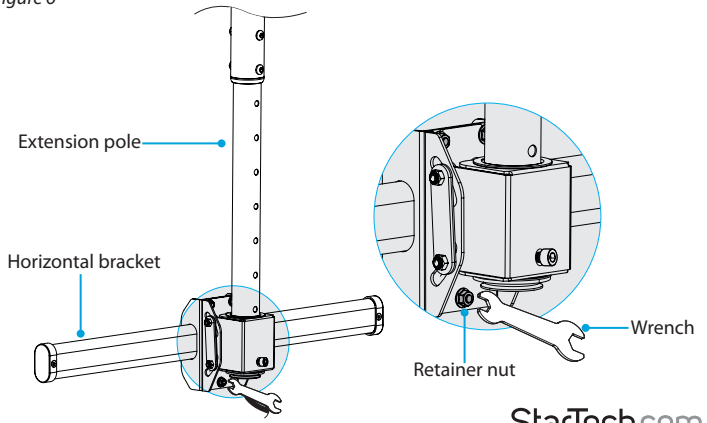

Prepare the vertical brackets

1. Use a screwdriver to remove the **screw** from the mounting hardware on each of the two **vertical brackets**.
2. Put the **screws** to the side; you will need to use them when you hang the TV.
3. Flip down the smaller piece of the mounting hardware. (*figure 7*)

figure 7

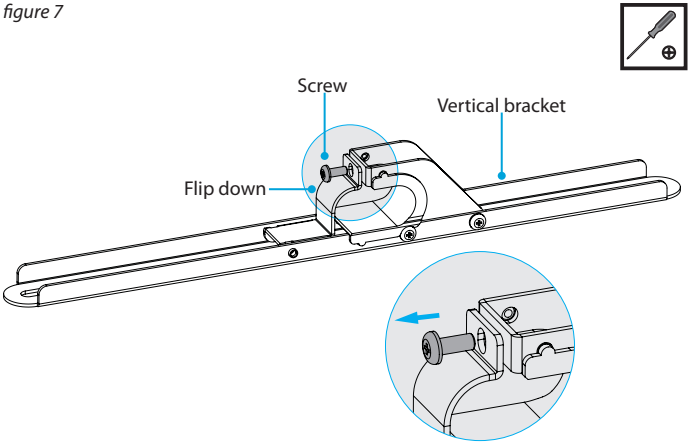

Mount a TV with a flush mounting surface

To accommodate different TV designs, the FPCEILPTBSP comes with five sets of screws of different lengths and diameters, and two sizes of spacers.

1. To select the combination of mounting hardware that you need to use to attach the **vertical brackets** to the TV, complete the following:
   - Determine the depth of the mounting holes on the TV.
   - Determine the diameter of the mounting holes on the TV.

Note: If you're using a TV with a flush mounting surface, you don't need to use any of the provided spacers.

2. Line up the **vertical brackets** with the mounting holes on the back of the TV.
3. Place the **rectangular washers** over the mounting holes in the **vertical brackets**.
4. Insert the **M5x14 mm screws** or the **M6x14 mm screws** through the **washers**, **vertical brackets**, and into the back of the monitor. (*figure 8*)
5. Use a Phillips screwdriver to tighten the screws.

Warning! Do not over-tighten the screws. If you encounter resistance while you're tightening the screws, stop tightening. Failure to do so could result in damage to the monitor.

figure 8

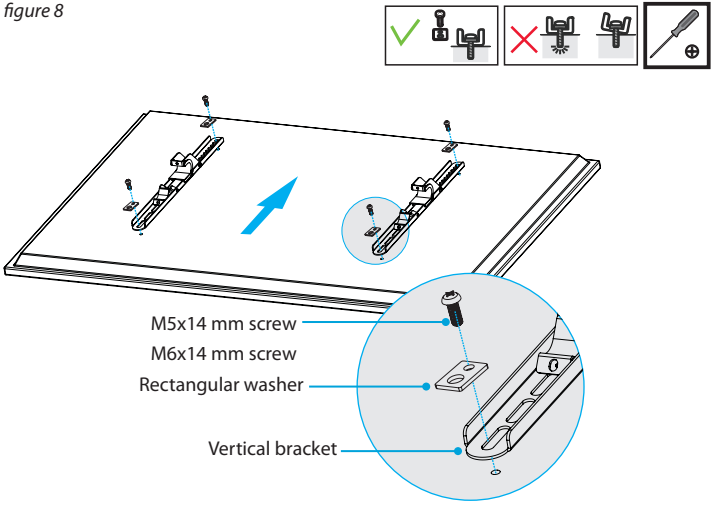

Mount a TV with a recessed mounting surface

To accommodate different TV designs, the FPCEILPTBSP comes with five sets of screws of different lengths and diameters, and two sizes of spacers.

1. To select the combination of mounting hardware that you need to use to attach the **vertical brackets** to the TV, complete the following:
   - Determine the depth of the mounting holes on the TV.
   - Determine the diameter of the mounting holes on the TV.
   - Consult the images below to see the different hardware combinations available, and select the one that works best with your TV.

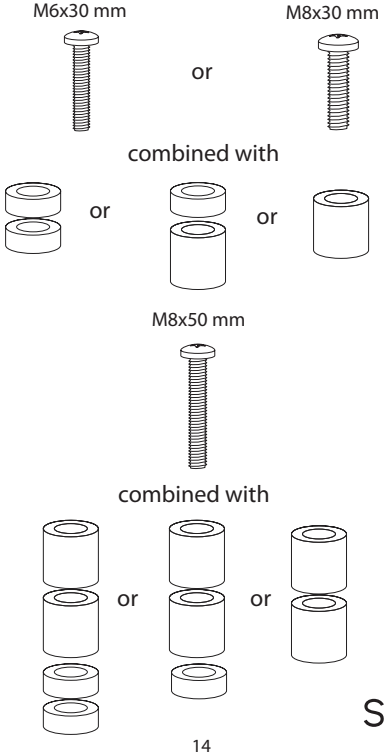

2. Line up the **vertical brackets** with the mounting holes on the back of the TV.
3. Place the **rectangular washers** over the **vertical brackets**.
4. Insert the **M6x30 mm screws**, **M8x30 mm screws**, or **M8x50 screws** through the **washers**, **vertical brackets**, **spacers**, and into the back of the monitor.
5. Use a Phillips screwdriver to tighten the screws. (*figure 9*)

Warning! Do not over-tighten the screws. If you encounter resistance while you're tightening the screws, stop tightening. Failure to do so could result in damage to the monitor.

figure 9

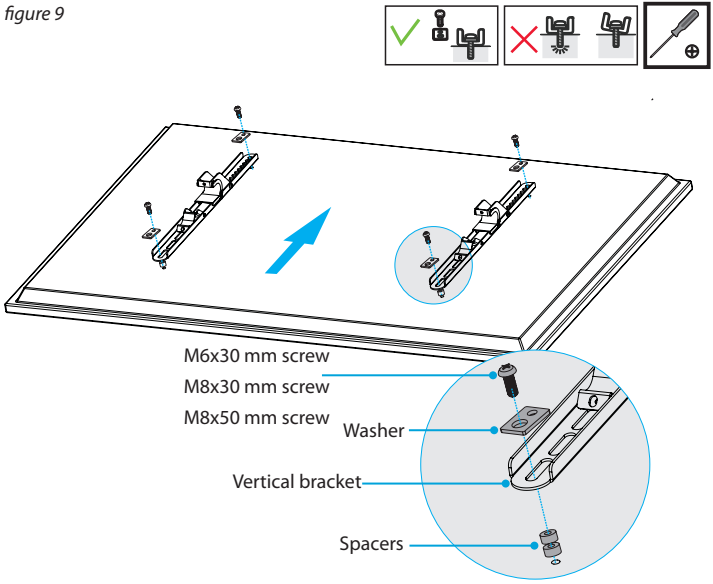

Attach the TV to the horizontal bracket

Warning! Make sure that the weight of the TV doesn't exceed the weight capacity of this product. If you exceed the weight capacity, you might experience personal injury or damage to the product. This product can support the following weight:
Up to 50 kg (110 lb.)

Warning! Attaching the monitors is a two-person job. **Do not** attempt to complete this task by yourself.

1. Carefully lift up the TV and hook the mounting hardware on the **vertical brackets** onto the **horizontal bracket** attached to the **extension pole**. (*figure 10)*

figure 10

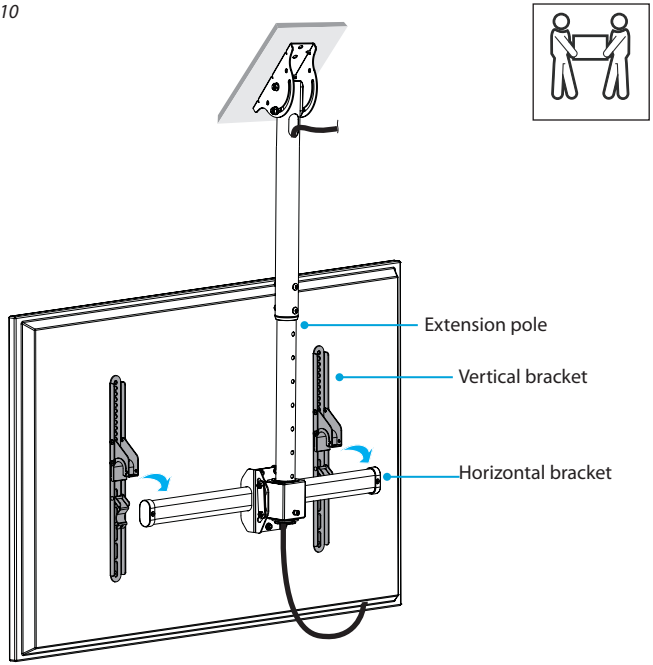

2. Flip up the mounting hardware and reinsert the **screws** that you removed from the mounting hardware on each of the **vertical brackets**. (*figure 11*)
3. Use a Phillips screwdriver to tighten the screws in place.

figure 11

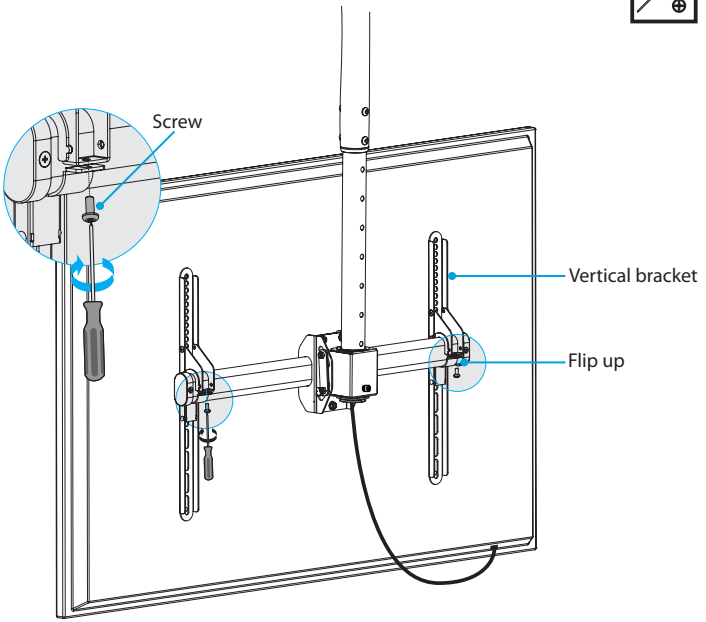

4. Make any necessary adjustments to the angle of the TV. (*figure 12*)

figure 12

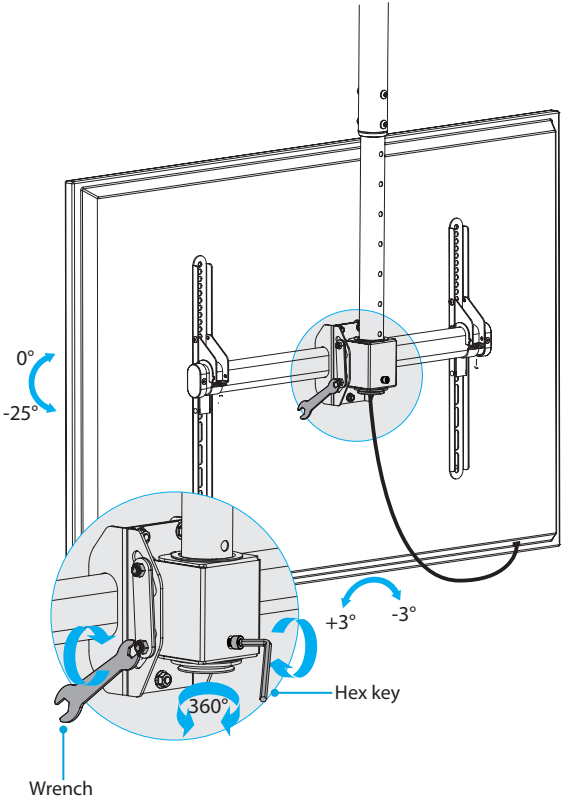

Technical support

StarTech.com's lifetime technical support is an integral part of our commitment to provide industry-leading solutions. If you ever need help with your product, visit **www.startech.com/support** and access our comprehensive selection of online tools, documentation, and downloads.

For the latest drivers/software, please visit **www.startech.com/downloads**

Warranty information

This product is backed by a five-year warranty.

StarTech.com warrants its products against defects in materials and workmanship for the periods noted, following the initial date of purchase. During this period, the products may be returned for repair, or replacement with equivalent products at our discretion. The warranty covers parts and labor costs only. StarTech.com does not warrant its products from defects or damages arising from misuse, abuse, alteration, or normal wear and tear.

Limitation of liability

In no event shall the liability of StarTech.com Ltd. and StarTech.com USA LLP (or their officers, directors, employees or agents) for any damages (whether direct or indirect, special, punitive, incidental, consequential, or otherwise), loss of profits, loss of business, or any pecuniary loss, arising out of or related to the use of the product exceed the actual price paid for the product. Some states do not allow the exclusion or limitation of incidental or consequential damages. If such laws apply, the limitations or exclusions contained in this statement may not apply to you.

StarTech.com

Hard-to-find made easy®

Hard-to-find made easy. At StarTech.com, that isn't a slogan. It's a promise.

StarTech.com is your one-stop source for every connectivity part you need. From the latest technology to legacy products — and all the parts that bridge the old and new — we can help you find the parts that connect your solutions.

We make it easy to locate the parts, and we quickly deliver them wherever they need to go. Just talk to one of our tech advisors or visit our website. You'll be connected to the products you need in no time.

Visit www.startech.com for complete information on all StarTech.com products and to access exclusive resources and time-saving tools.

StarTech.com is an ISO 9001 Registered manufacturer of connectivity and technology parts. StarTech.com was founded in 1985 and has operations in the United States, Canada, the United Kingdom and Taiwan servicing a worldwide market.