Analog signal isolator
2-channel
IM31-22EX-I

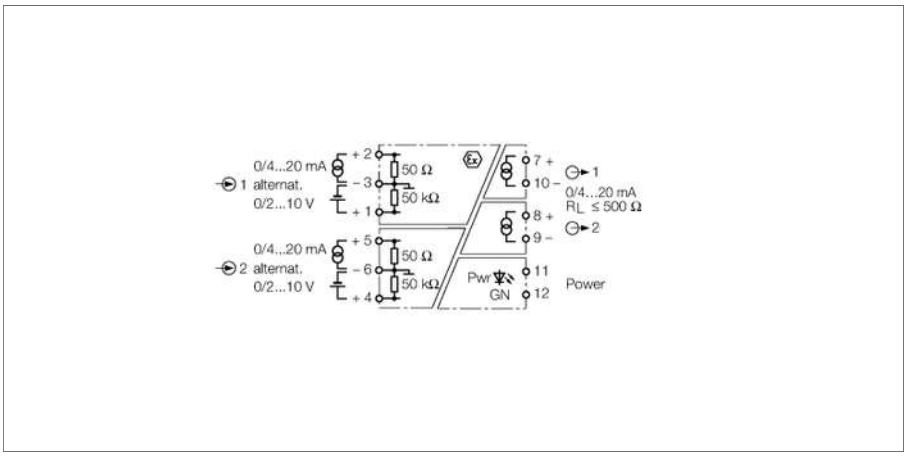

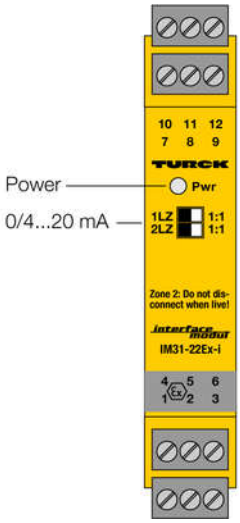

Standard active voltage or current signals are galvanically isolated and transferred via the 2-channel analog signal isolator IM31-22EX-I from the Ex area to the non-Ex area.

The device features two input circuits of 0/2…10 V and 0/4…20 mA as well as two short-circuit proof output circuits of 0/4…20 mA.

The transfer characteristic is adjusted via a DIP switch at the front. In "1:1" switch position the input signals are transferred unattenuated to the outputs in the non-Ex area. In "LZ" switch position, a dead-zero signal at the input (0…10 V / 0…20 mA) is converted and provided as a live-zero signal at the output (4…20 mA).

The green LED indicates operational readiness.

- **ATEX, IECEx, CSA, FM, UL, TIIS, GOST**
- **Installation in zone 2**
- **Transfer of standard analog signals from the Ex area to the non-Ex area**
- **Input circuits: 0/2…10 V or 0/4…20 mA**
- **Output circuits: 0/4…20 mA**
- **Complete galvanic isolation**

Edition • 2014-03-14T17:54:10+01:00

Hans Turck GmbH & Co.KG ● D-45472 Mülheim an der Ruhr ● Witzlebenstraße 7 ● Tel. 0208 4952-0 ● Fax 0208 4952-264 ● more@turck.com ● www.turck.com

Analog signal isolator
2-channel
IM31-22EX-I

Dimensions

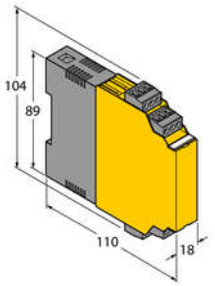

Type code	IM31-22EX-I
Ident no.	7506322
Flammability class acc. to UL 94	V-0
Nominal voltage	Universal voltage supply unit
Operating voltage	20…250 VAC
Frequency	40…70 Hz
Operating voltage range	20…125 VDC
Power consumption	≤ 2.2 W
Voltage input	0/2…10 VDC
Input resistance (voltage)	≥ 50 kΩ
Current input	0/4…20 mA
Input resistance (current)	≤ 50 Ω
Output circuits	
Output current	0/4...20 mA
Load resistance current output	≤ 0.5 kΩ
Rise time (10-90%)	≤ 50 ms
Dropout time (90…10%)	≤ 50 ms
Measuring accuracy	≤ 0.2 % of full scale
Reference temperature	23 °C
Temperature drift	≤ 0.01 % / K
Galvanic isolation	
Test voltage	2.5 kV
Ex approval acc. to conformity certificate	TÜV 04 ATEX 2679
Application area	II (1) G; II (1) D
Protection type	[Ex ia Ga] IIC/IIB; [Ex ia Da] IIIC
Max. values:	terminal connection: 1…3 / 4…6
Max.output voltage U_o	≤ 7.2 V
Max. output current I_o	≤ 1 mA
Max. output power P_o	≤ 2 mW
Characteristic	linear
Rated voltage	250 V
Internal inductance/capacitance L_i/C_i	Li = 65 µH; Ci = 52 nF

External inductance/capacitance L_o/C_o

Ex ia	IIC			IIB		
Lo [mH]	0.5	4.5	9.5	1.5	9.5	20
Co [µF]	2	1.5	1.3	9	6.7	6.1

Ex approval acc. to conformity certificate	TÜV 06 ATEX 553387 X
Application area	II 3 G
Protection type	Ex nA [ic Gc] IIC/IIB T4 Gc
Max. values:	terminal connection: 1…3 / 4…6
Max.output voltage U_o	≤ 7.2 V
Max. output current I_o	≤ 1 mA
Max. output power P_o	≤ 2 mW
Characteristic	linear

External inductance/capacitance L_o/C_o

Ex ic	IIC			IIB		
L_o [mH]	0.5	4.5	9.5	1.5	9.5	20
C_o [µF]	3.9	2.5	2.2	17	12	10

MTTF	90 years acc. to SN 29500 (Ed. 99) 40 °C

Edition • 2014-03-14T17:54:10+01:00

Analog signal isolator
2-channel
IM31-22EX-I

Indication	
Operational readiness	green
Protection class	IP20
Ambient temperature	-25…+70 °C
Storage temperature	-40…+80°C
Relative humidity	≤ 95%
Dimensions	104 x 18 x 110 mm
Weight	137 g
Mounting instruction	For mounting on DIN rail or mounting panel
Housing material	polycarbonate/ABS
Electrical connection	4 x 3-pole removable terminal blocks, reverse polarity protected, screw connection
Terminal cross-section	1 x 2.5 mm^2 / 2 x 1.5 mm^2
Tightening torque	0.5 Nm

Edition • 2014-03-14T17:54:10+01:00

Accessories

Type code	Ident no.	Description	Dimension drawing
IM-CC-3X2BU/2BK	6900475	Cage clamp terminals for IM modules (Ex devices; width 18 mm): 2 blue/2 black, 3-pin, included in delivery.	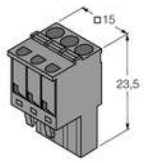

Edition • 2014-03-14T17:54:10+01:00