OGW202

Diffuse reflection sensor with background suppression

OGWIHPKG/US/IO-LINK

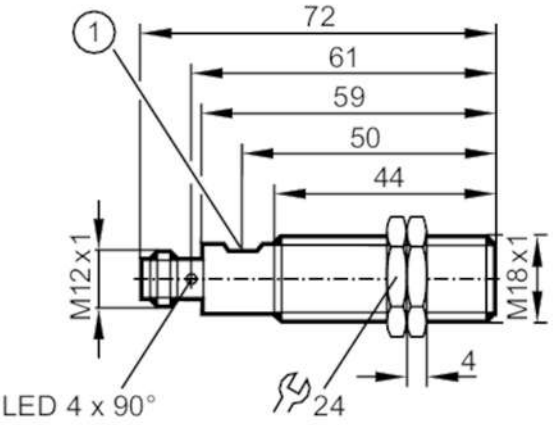

1 potentiometer

Product characteristics		
Type of light		infrared light
Housing		threaded type
Application		
Special feature		Background suppression
Application	[m]	0.025...2
Function principle		Diffuse reflection sensor
Electrical data		
Operating voltage	[V]	10...30 DC; ("supply class 2" to cULus)
Current consumption	[mA]	< 30
Protection class		III
Reverse polarity protection		yes
Max. power-on delay time	[ms]	300
Type of light		infrared light
Wave length	[nm]	940
Outputs		
Electrical design		PNP
Output function		light-on mode
Max. voltage drop switching output DC	[V]	2.5
Permanent current rating of switching output DC	[mA]	100
Short-circuit protection		yes
Type of short-circuit protection		pulsed
Detection zone		
Range	[mm]	25...400
Range adjustable		yes
Max. light spot diameter	[mm]	200
Light spot dimensions refer to		at maximum range

OGW202

Diffuse reflection sensor with background suppression

OGWIHPKG/US/IO-LINK

Background suppression available		yes	
Background suppression	[m]	2	
Measuring/setting range			
Sampling rate	[Hz]	10	
Interfaces			
Communication interface		IO-Link	
Transmission type		COM2 (38,4 kBaud)	
IO-Link revision		1.1	
SDCI standard		IEC 61131-9	
Profiles		Smart Sensor: Device Identification; Switching Signal Channel; Process Data Variable; Device Diagnosis; Tech Channel	
SIO mode		yes	
Required master port type		A	
Min. process cycle time	[ms]	10	
Supported DeviceIDs		**Type of operation**	**DeviceID**
		default	1161
Operating conditions			
Ambient temperature	[°C]	-20...55	
Storage temperature	[°C]	-40...85	
Protection		IP 65	
Max. immunity to extraneous light	[klx]	8	
Tests / approvals			
EMC		EN 60947-5-2	
Notes on laser protection		Caution:	laser light
		laser class:	1
			EN / IEC60825-1:2007
			EN / IEC60825-1:2014
			Complies with 21 CFR 1040 except for deviations pursuant to Laser Notice No. 50, dated June 2007.
MTTF	[years]	690	
UL approval		Ta	-20...55 °C
		Enclosure type	Type 1
		power supply	Class 2
		File number UL	E174191
Mechanical data			
Weight	[g]	55.2	
Housing		threaded type	
Dimensions	[mm]	M18 x 1 / L = 72	
Thread designation		M18 x 1	
Materials		housing: stainless steel (316L/1.4404); sensor surface: PMMA; ABS; operator interface: TPE; lock nuts: brass white bronze coated	
Lens material		PMMA	
Displays / operating elements			
Display		switching status	4 x 90° LED, yellow

OGW202

Diffuse reflection sensor with background suppression

OGWIHPKG/US/IO-LINK

Operating elements	potentiometer

Accessories

Items supplied	lock nuts: 2 x M18

Remarks

Pack quantity	1 pcs.

Electrical connection

Connector: 1 x M12; coding: A



Connection

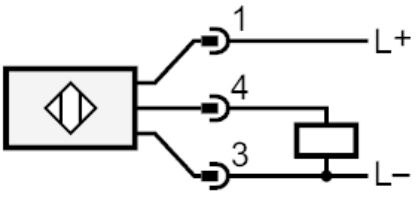

4 OUT / IO-Link

Diagrams and graphs

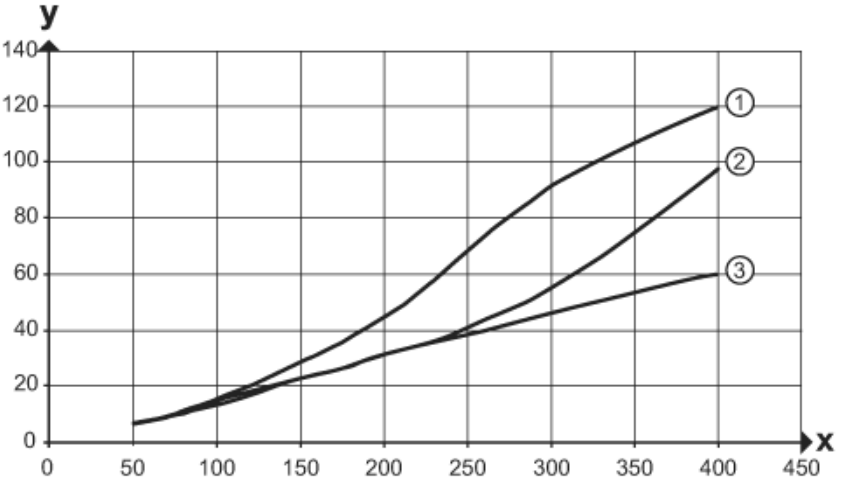

1 < 8 kLux

2 < 3 kLux

3 < 1 kLux

OGW202

Diffuse reflection sensor with background suppression

OGWIHPKG/US/IO-LINK

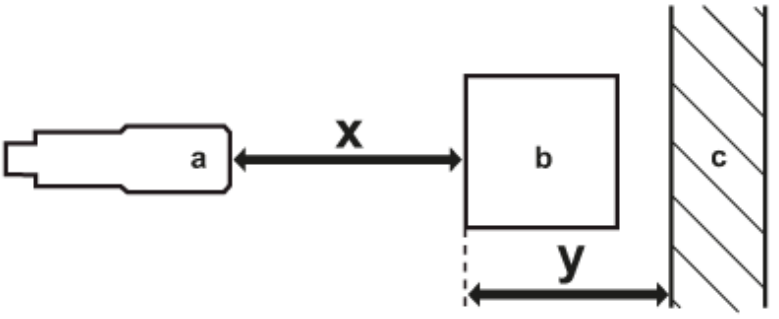

a: sensor

b: object

c: background

x: distance sensor/object [mm]

y: min. distance object/background [mm]