HPS | SINGLE ACTING LOW HEIGHT PAD CYLINDERS



Capacities from 4.5 to 147 tonnes

Stroke lengths from 6 to 16 mm

Working pressure 700 bar

- Single acting, spring assisted return
- Low closed height design for use in confined work areas
- Nitrocarburised piston rod for corrosion resistance
- Low friction bearing surfaces
- Anti-extrusion seals for improved performance at high pressures
- Customised and special design cylinders are available on request

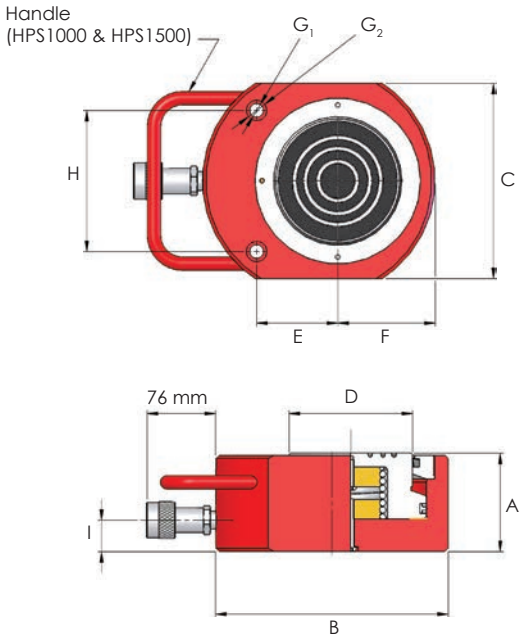

Model number	Capacity (tonnes)	Stroke (mm)	Oil capacity (cm^3)	Cylinder eff. area (cm^2)	Weight (kg)	Dimensions (mm)									
						A	B	C	D	E	F	G_1	G_2	H	I
HPS50	4.5	6	4	6.4	0.8	32	60	38	24	20	19	5.6	9.8	26	19
HPS51	4.5	16	10	6.4	0.9	42	60	38	24	20	19	5.6	9.8	26	19
HPS100	10	10	14	14.4	1.6	46	81	56	38	34	28	6.8	11.3	37	19
HPS200	20	11	31	28.6	2.6	52	100	76	51	40	39	8.8	14.3	50	19
HPS300	32	12	55	45.6	4.2	59	115	95	60	46	48	8.8	14.3	52	19
HPS500	50	15	107	71.3	6.6	67	140	114	70	54	60	10.8	17.3	67	20
HPS750	73	16	164	102.7	10.4	81	165	140	82	67	70	13	19	76	21
HPS1000	109	16	245	153.4	23.2	91	215	180	114	75	90	12.8	19	130	29
HPS1500	147	16	330	206.2	28.5	100	215	191	114	83	95	13	19	117	29