

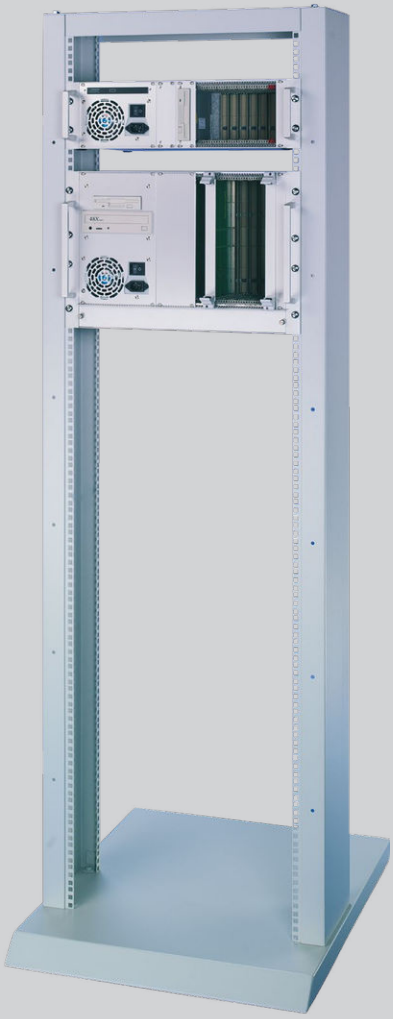

CONNECT AND PROTECT

19”-Lab Racks

nVent
SCHROFF

Cabinets – 19" lab racks

OVERVIEW

MAIN CATALOG

Cabinets 1

Wall mounted cases 2

Accessories for cabinets and wall mounted cases . . 3

Climate control . . 4

Electronics cases 5

Subracks/ 19" chassis 6

Front panels, plug-in units 7

Systems 8

Power supply units 9

Backplanes 10

Connectors, front panel component system 11

Appendix 12



01305003

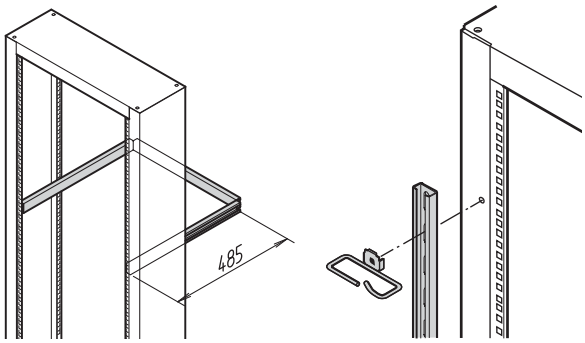

lra45330 vnt007

Cable ducting on the front and rear side

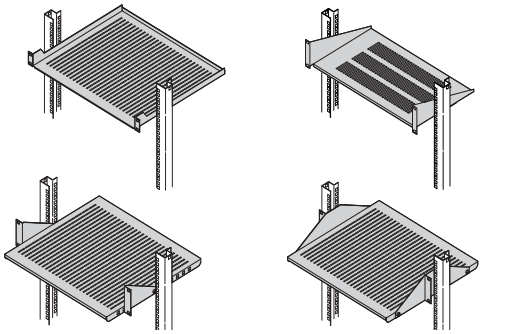

01505050

Large selection of equipment shelves

APPLICATION/FUNCTION

19" lab racks are freely accessible from all sides. Subracks, 19" cases and 19" shelves can be mounted. Two angled steel uprights are screw-fixed on the base part (mobile base/plinth and base plate respectively). The 19" cut-outs of the steel uprights are recessed so far that a flat surface for front panels is created. At the top, the two profiles are connected by a cover plate which gives the rack additional stability.

The base/plinth of the mobile 19" lab rack has two fixed rear castors and two locking castors at the front. The 100 mm roller diameter ensures both good mobility and high stability.

A base plate from sheet steel forms the plinth for the stationary 19" lab rack.

STANDARDS/CERTIFICATIONS

- Internal and external dimensions in accordance with:
  IEC 60297-3-100

Cabinets – 19" lab racks

OVERVIEW

Overview **1.354**

19" LAB RACK

- Mobile or stationary
- Various shelves
- Accessories for cable ducting



01305001

MOBILE

- 36 U
- Load-carrying capacity up to max. 200 kg



01305002

STATIONARY

- 24 and 39 U
- Load-carrying capacity up to max. 150 kg

SERVICEPLUS

e.g. modification (special colours)
e.g. custom solutions (special sizes)

19" lab racks

19" lab rack, mobile **1.356**
19" lab rack, stationary **1.357**
Panel mounts **1.358**
Cable support rail **1.358**
C-profiles **1.359**
Cable eyes for C-profile **1.359**
19" equipment shelves **1.361**
Slide rails **1.361**

Cabinets – 19" lab racks

19" LAB RACK, MOBILE



01305001

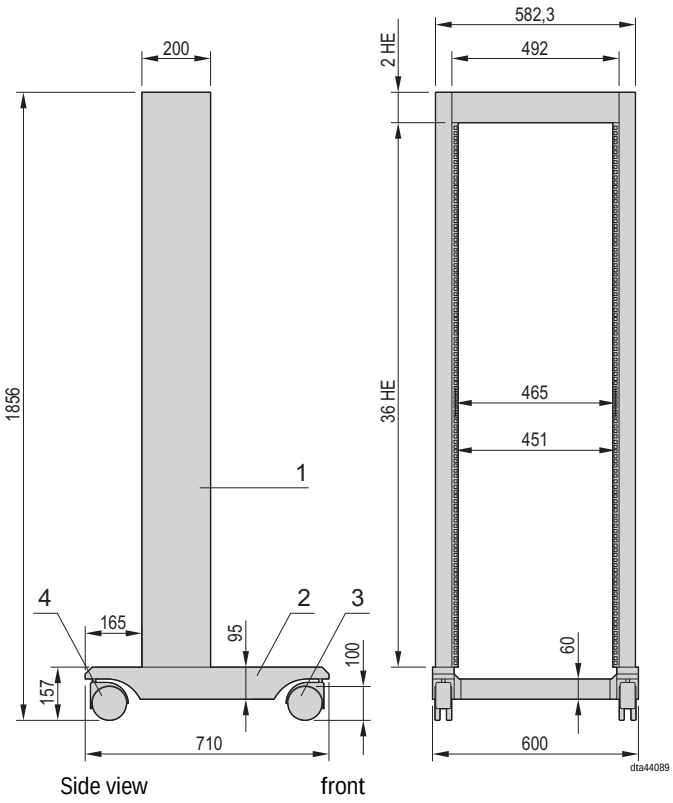

- Stationary load-carrying capacity 200 kg at a defined centre of gravity in the centre of the lab rack
- Recommended max. chassis depth 400 mm

DELIVERY COMPRISES (assembled)

Item	Qty	Description
1	1	19" frame, St, 2 mm, RAL 7035, with EIA cut-outs
2	1	Mobile base/plinth, Al, die-cast, RAL 7035
3	2	Castor, plastic (PA), with rubber insert
4	2	Locking castor, plastic (PA), with rubber insert

ORDER INFORMATION

Description	Part no.
19" lab rack, mobile, useable height 36 U	**10117-498**
19" assembly kit (50 x screws, 50 x washers, 50 x nuts)	**21101-809**
19" assembly kit (100 x screws, 100 x washers, 100 x nuts)	**21101-810**

Cabinets – 19" lab racks

19" LAB RACK, STATIONARY



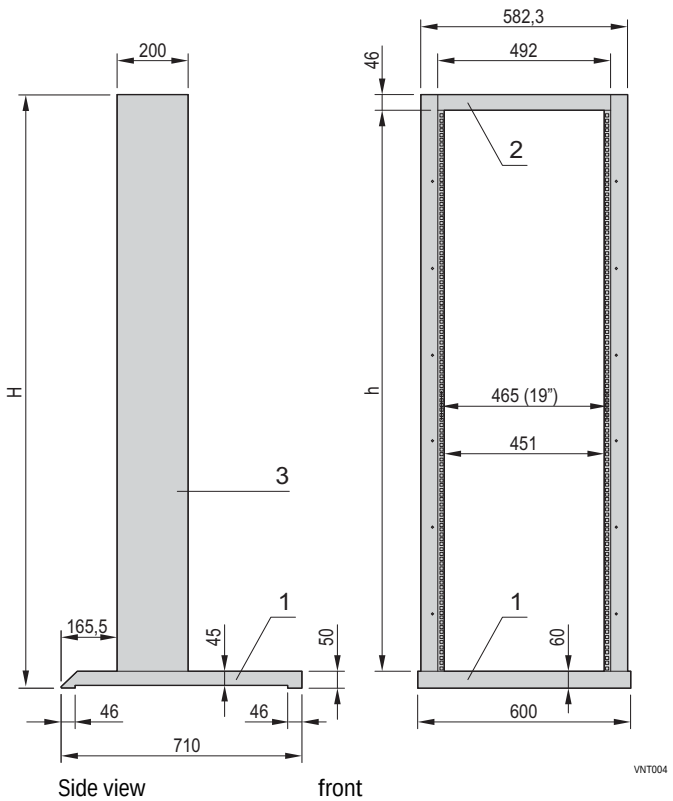

- Modular design with base/plinth and cover plate, please order uprights according to desired height separately
- Stationary load-carrying capacity 150 kg, at a defined centre of gravity in the centre of the lab rack
- Recommended max. chassis depth 400 mm

DELIVERY COMPRISES (kit)

Item.	Qty	Description
1	1	Base/plinth, St, 2 mm, RAL 7035
2	1	Trim at top, St, 1.5 mm, RAL 7035
4	1	Assembly kit

ORDER INFORMATION

Description	Item	Part no.
Base and trim	1 + 2 + 4	**20118-743**
Uprights (item 3) with EIA perforation, 24 U, RAL 7035, PU 2 pieces		**20118-741**
Uprights (item 3) with EIA perforation, 39 U, RAL 7035, PU 2 pieces		**20118-742**
Adjustable feet load-carrying capacity 100 kg per foot, PU 4 pieces		**21190-571**
Castors load-carrying capacity 150 kg per kit, castor diameter 52 mm, PU 4 pieces (2 locking, 2 non-locking)		**20118-462**
19" assembly kit (50 x screws, 50 x washers, 50 x nuts)		**21101-809**
19" assembly kit (100 x screws, 100 x washers, 100 x nuts)		**21101-810**

Technical data

Usable height	h	H
U	mm	mm
24	1067	1164
39	1733	1831

NOTE

- Please order uprights separately

Part number in bold face type: ready for despatch within 2 working days
Part number in normal type: ready for despatch within 10 working days

Cabinets – 19" lab racks

PANEL MOUNTS FOR STATIONARY 19" LAB RACK

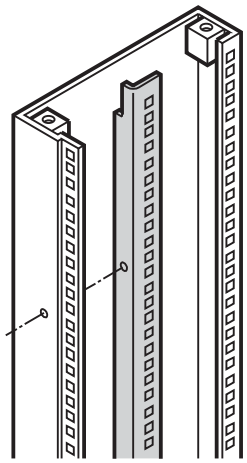

VNT011

- Required for fitting of cable retention rails or slide rails on stationary 19" lab rack

DELIVERY COMPRISES

Item	Qty	Description
1	2	Panel mount without assembly kit, St, 1.5 mm, RAL 7035

ORDER INFORMATION

Description	Height U	Part no.
Panel mount	24	**20118-744**
Panel mount	39	**20118-745**
Assembly kit PU 1 kit		**21101-175**

NOTE

- Please order assembly kit separately

CABLE SUPPORT RAIL

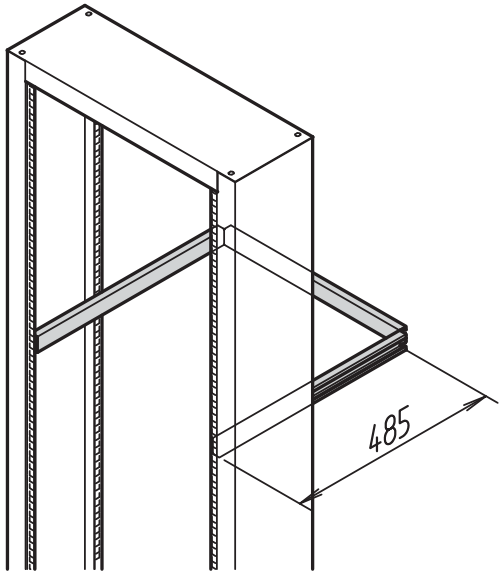

LRA45330

- For cable ducting and cable strain relief
- Designed for mobile 19" lab rack;
  with panel mounts also for stationary 19" lab rack

DELIVERY COMPRISES (Kit)

Item	Qty	Description
1	3	C-profile, St, 1.5 mm, zinc-plated
2	2	Corner piece, St, 2 mm, zinc-plated
3	1	Assembly kit

ORDER INFORMATION

Description	Part no.
Cable support rail	**20118-460**

NOTE

- Panel mounts are necessary for assembly on stationary 19" lab racks, please order them separately

Cabinets – 19" lab racks

C-PROFILE FOR STATIONARY 19" LAB RACK

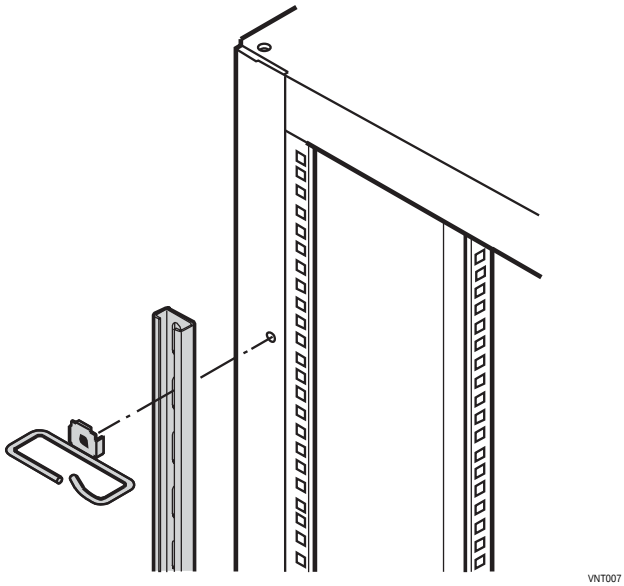

- For assembly to the vertical uprights on the right and left hand side of the 19" plane; especially suited for cable eyes

DELIVERY COMPRISES

Item	Qty	Description
1	2	C-profile, St, 1.5 mm, zinc-plated

ORDER INFORMATION

Height U	Length mm	Part no.
24	1050	20118-461
39	1650	**22114-461**
Assembly kit PU 1 kit		**21101-175**

NOTE

- Please order assembly kit separately
- Not suitable on mobile 19" lab racks

CABLE EYES FOR C-PROFILE

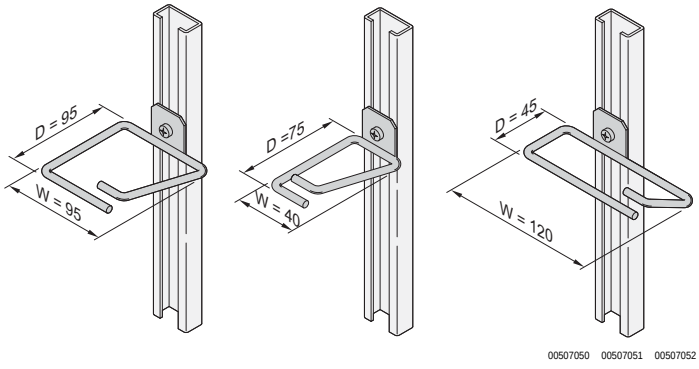

DELIVERY COMPRISES

Item	Qty	Description
1	4	Cable eye, round steel, 6 mm, zinc-plated, with integrated anti-rotation protection

ORDER INFORMATION

Description	W mm	D mm	Part no.
Cable eye for C-profile	120	45	**20118-339**
Cable eye for C-profile	40	75	**20118-554**
Cable eye for C-profile	95	95	**20118-340**
Assembly kit for 4 cable eyes, PU 1 kit			**21101-596**

NOTE

- Please order assembly kit separately

Part number in bold face type: ready for despatch within 2 working days
Part number in normal type: ready for despatch within 10 working days

Cabinets – 19" lab racks

19" EQUIPMENT SHELF, 1 U



00508012

- Static load-carrying capacity 5 kg
- Mounting height 1 U

DELIVERY COMPRISES

Item	Qty	Description
1	1	Equipment shelf, St, 1.5 mm

ORDER INFORMATION

Width mm	Depth mm	AlZn Part no.	RAL 7035 Part no.
447	390	**20118-781**	**20118-783**
19" assembly kit (screw, washer, nut) for one equipment shelf			**21190-095**

19" EQUIPMENT SHELF, 2 U



00508002

- Static load-carrying capacity 10 kg
- Mounting height 2 U

DELIVERY COMPRISES

Item	Qty	Description
1	1	Equipment shelf, St, 1.5 mm

ORDER INFORMATION

Width mm	Depth mm	RAL 7035 Part no.
447	238	**20118-785**
19" assembly kit (screw, washer, nut) for one equipment shelf		**21190-095**

19" EQUIPMENT SHELF, DEPTH-ADJUSTABLE, 2 U



- Static load-carrying capacity 15 kg
- Mounting height 2 U
- Depth-adjustable in 25 mm increments (front protrusion min. 26 mm)

DELIVERY COMPRISES (kit)

Item	Qty	Description
1	1	Equipment shelf, St, 1.5 mm
2	2	Mounting bracket with assembly kit, St, 1.5 mm

ORDER INFORMATION

Width mm	Depth mm	RAL 7035 Part no.
430	250	
430	300	**20118-790**
430	400	**20118-791**
19" assembly kit (screw, washer, nut) for one equipment shelf		**21190-095**

19" EQUIPMENT SHELF WITH FRONT PROTRUSION, 2 U

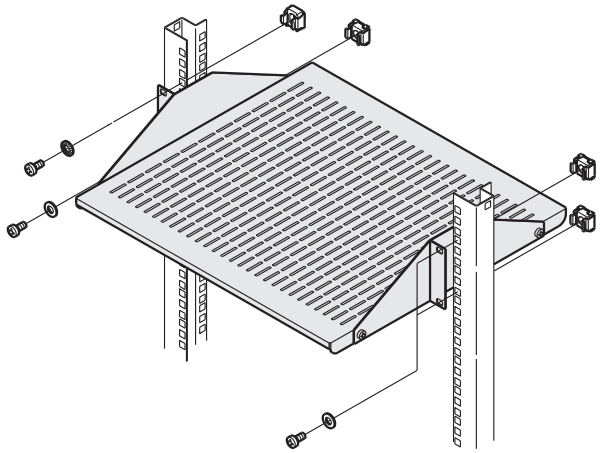

- Static load-carrying capacity 25 kg
- Mounting height 2 U
- Forward protrusion min. 168 mm

DELIVERY COMPRISES (kit)

Item	Qty	Description
1	1	Equipment shelf, St, 1.5 mm, RAL 7035
2	2	Mounting bracket, strengthened, St, 2/2.5 mm, RAL 7035
3	1	Assembly kit incl. GND/earthing kit

ORDER INFORMATION

Width mm	Depth mm	Part no.
430	400	**20119-257**

SLIDE RAIL, 40 KG

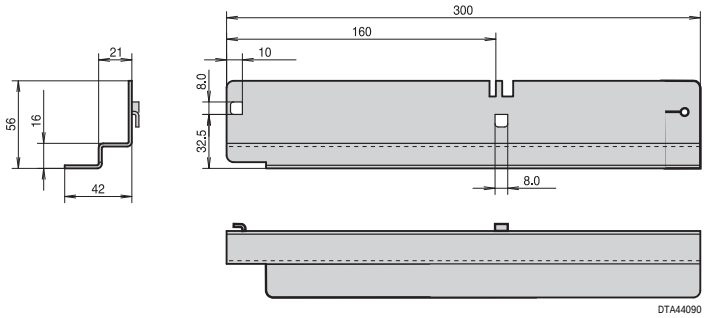

- For assembly on mobile 19" lab racks; with panel mounts also on stationary 19" lab racks
- Static load-carrying capacity 40 kg per pair

DELIVERY COMPRISES

Item	Qty	Description
1	2 / 10	Slide rail, St, 2 mm, zinc-plated

ORDER INFORMATION

Description	Qty/PU	Part no.
Slide rail, 40 kg	2	**20119-080**
Slide rail, 40 kg	10	**20119-106**

NOTE

- Panel mounts are necessary for assembly on stationary 19" labrack, please order separately, see page 1.358

Part number in bold face type: ready for despatch within 2 working days
Part number in normal type: ready for despatch within 10 working days

North America

Warwick, RI, USA
Tel +1.800.525.4682
San Diego, CA, USA
Tel +1.800.854.7086

Europe, Middle East & India

Straubenhardt, Germany
Tel +49 7082 794 0
Betschdorf, France
Tel +33 3 88 90 64 90
Warsaw, Poland
Tel +48 22 209 98 35
Hemel Hempstead,
Great Britain
Tel +44 1442 24 04 71
Lainate, Italy
Tel +39 02 932 714 1
Dubai, United Arab Emirates
Tel +971 4 37 81 700
Bangalore, India
Tel +91 80 67152000
Istanbul, Turkey
Tel +90 216 250 7374

Asia Pacific

Shanghai, China
Tel +86 21 2412 6943
Singapore
Tel +65 6768 5800
Shin-Yokohama, Japan
Tel +81 45 476 0271

Our powerful portfolio of brands:

CADDY ERICO HOFFMAN RAYCHEM SCHROFF TRACER

nVent

nVent.com/SCHROFF

©2018 nVent. All nVent marks and logos are owned or licensed by nVent Services GmbH or its affiliates. All other trademarks are the property of their respective owners.
nVent reserves the right to change specifications without notice.