Ultrasonic Sensors

BUS M18M1-GPXI-02/015-S92G-511
Order Code: BUS007E

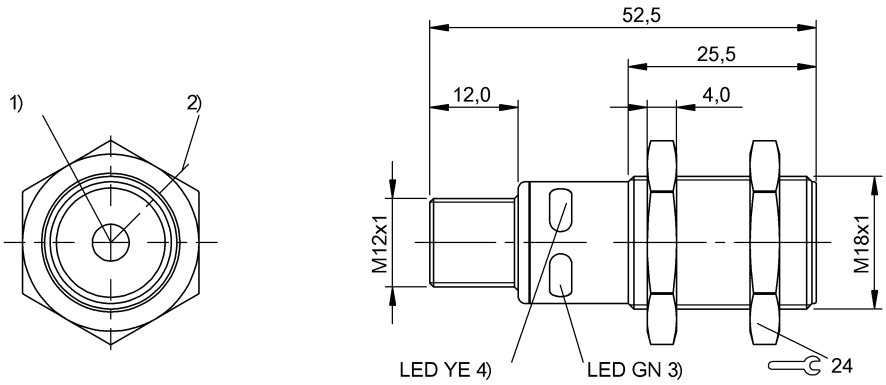

1) Ultrasonic transducer axis, 2) Exit direction 90° connector, 3) Operating voltage, 4) Output function

Basic features

Application	Distance measurement Object detection
Approval/Conformity	cULus CE WEEE UKCA
Operating mode	IO-Link Reflectionlight scanner (switching point) Refl.light scanner (window) Retro-reflector
Series	M18M1

Display/Operation

Adjuster	no
Display	Output function- LED yellow LED green: Power

Electrical connection

Connection	M12x1-Male
Polarity reversal protected	yes
Short-circuit protection	yes

Electrical data

Current draw max.	40 mA
Hysteresis H max.	2 mm
Input function	Select operating mode Factory setting (Reset) Synchronization on/off NO/NC SIO mode/IO-Link mode Teach switching distance, 2 values Synchronization signal
Operating voltage Ub	10...30 VDC
Output current max.	100 mA
Rated operating voltage Ue DC	24 V
Switching frequency	25 Hz
Synchronization	internal, max. 10 sensors
Ultrasonic Frequency	380 kHz

Environmental conditions

Ambient temperature	-25...70 °C
IP rating	IP67
Storage temperature	-40...85 °C

Functional safety

MTTF (40 °C)	1134 a

Ultrasonic Sensors

BUS M18M1-GPXI-02/015-S92G-511
Order Code: BUS007E

Interface

Interface	IO-Link 1.1
Interface setting option	Switch. point (2x for window) SIO mode/IO-Link mode Measured value filter Hysteresis Filter strength (10 levels) Operating mode Foreground suppression range Normally open/Normally closed Factory setting (Reset)
Process data OUT	Distance value Switching state
Process data cycle min.	8 ms
Switching output	PNP/NPN NO/NC push-pull

Material

Housing material	Brass, nickel-plated PBT
Material sensing surface	PU foam/Epoxy resin/Glass
Surface protection	nickel-plated

Mechanical data

Dimension	Ø 18 x 52.5 mm
Mounting part	Nut M18x1

Range/Distance

Measuring range	25...250 mm
Rated operating distance Sn	150 mm
Repeat accuracy	± 0.15 %FS

Connector Drawings

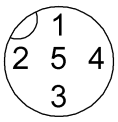

Wiring Diagrams (Schematic)

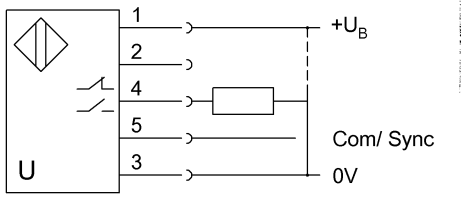

Technical Drawings

