HS1B6NT060E230

HOCKEY PUCK, SINGLE-PHASE, 60A, 18...280VAC/DC, SCREW TERMINALS



Input characteristics			
Control voltage			18...280VAC/DC
Operating voltage limits			
	Operating voltage pick-up	V	18
	Operating voltage drop-out	V	8
Input current at min…max voltage		mA	4.5...6
Operating times			
Switching-on			Half cycle max
Switching-off			Half cycle max
Output characteristics			
Static output type			SCR (silicon controlled rectifier)
Switching mode			Zero crossing
Rated operating voltage		VAC	24…600
Blocking voltage		V	1200
Operational frequency (min…max)		Hz	45...65
Rated operating current AC-51 (resistive load) at 40°C		A	60
Rated operating current AC-51 (resistive load) at 55°C		A	52
Thermal resistance between junction to case		K/W	0.4
Heatsink for use at 40°C and 55°C at rated current AC-51		K/W	≤0.55
Operational current min		A	0.05
Non repetitive surge peak on state current t=10ms		A	750
Off state leakage current		mA	1
On state output voltage drop		V	1.45
Critical rate of rise of off-state voltage dv/dt		V/µs	500
Input - Output isolation		V	4000
Input - Output to metal base		V	4000
Output protection type			TVS
I2t		A2s	2800
Terminal characteristics			
Control terminals		Type	Screw M4
Terminals tool			PZ2
Tightening torque control terminals			
		Nm	1.2…2
		Ibin	10.6…17.7
Conductor section connectable (control terminals) with 1 or 2 wires min…max			
	AWG stranded	n°	18…14
	Flexible w/o lug	mm2	0.75…2.5
	Flexible c/w insulated spade lug	mm2	0.75…2.5
Load terminals		Type	Screw M5
Load terminals tool			PZ2
Tightening torque load terminals			
		Nm	2…3
		Ibin	20.4

The characteristics described in this document are subject to updates or modifications at any time. The descriptions, technical and functional information, illustrations and instructions in this brochure are purely illustrative, and are consequently not contractually binding

Conductor section connectable (load terminals) with 1 or 2 wires min…max			
	AWG stranded	n°	16…10
	Flexible w/o lug	mm2	1.5…6
	Flexible c/w insulated spade lug	mm2	1.5…6
Operating position			
	allowable		Any
Fixing			Screw

Ambient conditions

Temperature			
Operating temperature			
	min	°C	-55
	max	°C	+90
Storage temperature			
	min	°C	-55
	max	°C	+125

Dimensions

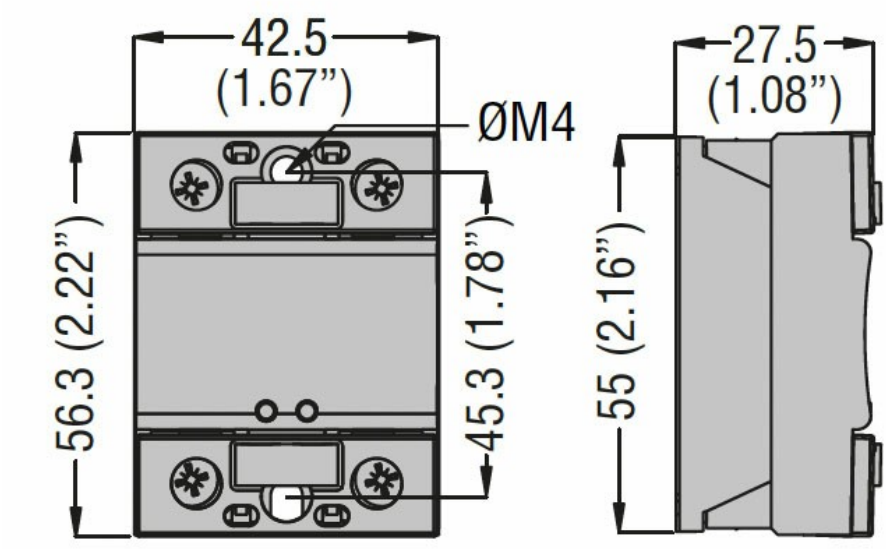

Wiring diagrams

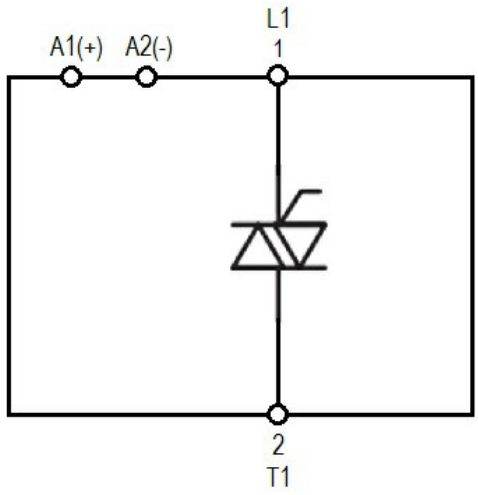

Certifications and compliance

Certifications

IEC/EN/BS 60335-1

IEC/EN/BS 60947-4-2

The characteristics described in this document are subject to updates or modifications at any time. The descriptions, technical and functional information, illustrations and instructions in this brochure are purely illustrative, and are consequently not contractually binding

	IEC/EN/BS 60947-4-3
	IEC/EN/BS 62314
Compliance	
	cURus
	VDE

ETIM classification

EC000066 - Power contactor, AC switching

The characteristics described in this document are subject to updates or modifications at any time. The descriptions, technical and functional information, illustrations and instructions in this brochure are purely illustrative, and are consequently not contractually binding