stay connected

M12 male 0° / M12 female 0° A-cod. shielded

PUR 4x0.5+2x0.25 shielded gn UL/CSA+drag ch. 0.3m

Cube67
Male straight – female straight
M12 – M12, 6-pole
shielded
A-coded
Hybrid cable
Plastic housings with good resistance against chemicals and oils.
The resistance to aggressive media should be individually tested for your application. Further details on request.
Further cable lengths on request.

Link to Product

Illustration



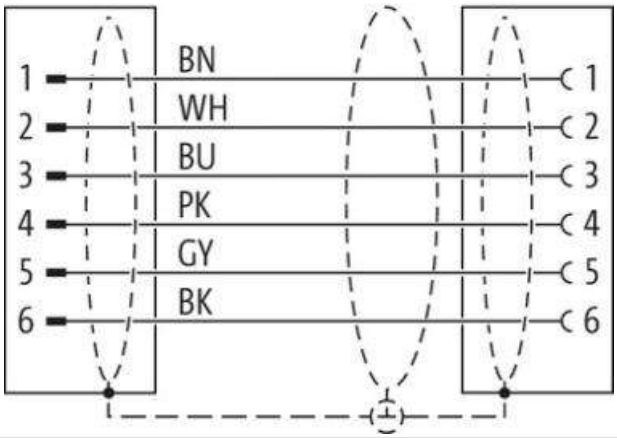

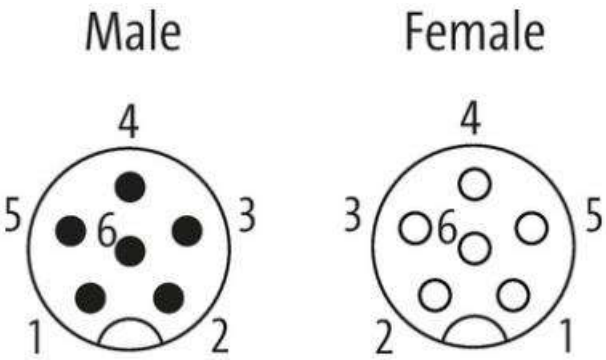

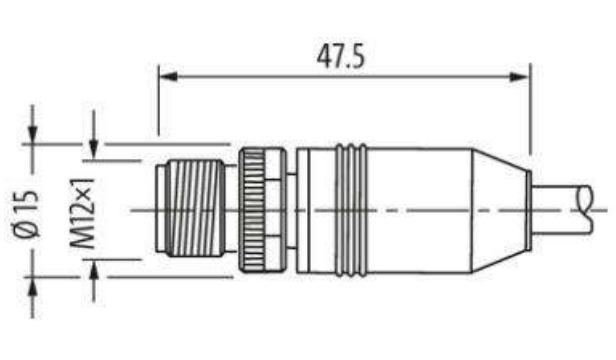

The information in this Product-PDF has been compiled with the utmost care.
Liability for the correctness completeness and topicality of the information is restricted to gross negligence. Version: 2024-01-31

MURR ELEKTRONIK
stay connected

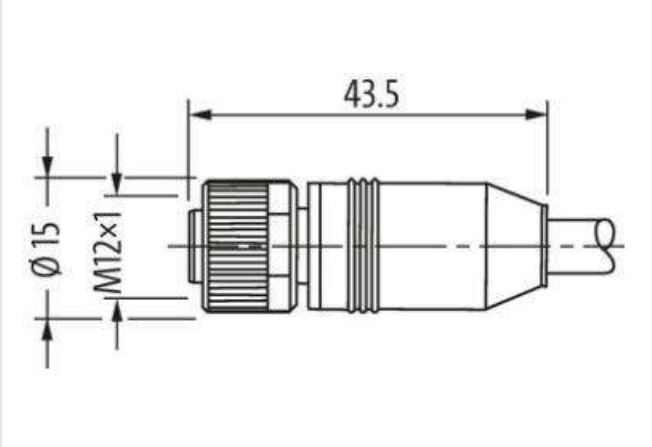

Product may differ from Image

Cable length	0,3 m
Side 1	
Tightening torque	0,6 Nm
Mounting method	inserted, screwed
Coating contact	gold plated
Family construction form	M12
Thread	M12 x 1
Coding	A
Material contact	Copper alloy
Material	PUR
No. of poles	6
Width across flats	SW13
Side 2	
Tightening torque	0,6 Nm
Mounting method	inserted, screwed
Coating contact	gold plated
Family construction form	M12
Thread	M12 x 1
Coding	A
Material contact	Copper alloy
Material	PUR
No. of poles	6
Commercial data	
ECLASS-6.0	27061801
ECLASS-6.1	27060307
ECLASS-7.0	27060307
ECLASS-8.0	27060307
ECLASS-9.0	27060307
ECLASS-10.1	27060307
ECLASS-11.1	27060307
ECLASS-12.0	27060307
ETIM-5.0	EC001855

The information in this Product-PDF has been compiled with the utmost care.
Liability for the correctness completeness and topicality of the information is restricted to gross negligence. Version: 2024-01-31

MURR ELEKTRONIK
stay connected

customs tariff number	85444290
GTIN	4048879140539
Packaging unit	1
Electrical data | Supply	
Operating voltage AC max.	30 V
Operating voltage DC max.	30 V
Operating voltage AC (UL-listed)	30 V
Operating voltage DC (UL-listed)	30 V
Current operating per contact max.	4 A
Diagnostics	
Status indication LED	no
Device protection | Electrical	
Degree of protection (EN IEC 60529)	IP65, IP67
Additional condition protection degree	inserted, screwed
Pollution Degree	3
Rated surge voltage	0,8 kV
Material group (IEC 60664-1)	I
Mechanical data | Material data	
Coating locking	Nickeled
Material gasket	FKM
Locking material	Zinc die-casting
Mechanical data | Mounting data	
Mounting method	inserted, screwed, Shaking protection
Environmental characteristics | Climatic	
Operating temperature min.	-25 °C
Operating temperature max.	85 °C
Additional condition temperature range	depending on cable quality
Cable	
Cable identification	802
Approval (cable)	cURus (AWM-Style 20549/10493); CE conform
Cable weight [g/m]	95,7 g
Material wire	Cu wire, bare
Single wire Ø (core)	0.15 mm (0.5 mm²); 0.1 mm (0.25 mm²)
Construction (core)	28× 0.15 mm (0.5 mm²); 32× 0.1 mm (0.25 mm²); (multi-strand wire class 6)
Diameter (core)	4× 0.5 + 2× 0.25 mm²
AWG	similar to AWG 20 (0.5 mm²); similar to AWG 24 (0.25 mm²)
Material wire isolation	TPE-E
Shore hardness wire isolation	55 ±5 D
Wire-Ø incl. isolation	1.5 mm ±5% (0.5 mm²); 1.4 mm ±5% (0.25 mm²)
Color/numbering of wires	(bl, wh, br, bk) + (gr, pk)
Shield	yes
Shield (Type)	Copper braid
Optical shield cover	min. 80%
Material jacket	PUR
Material property (jacket)	CFC-, halogen-, cadmium-, silicone-free, matt, low-adhesion, machine easy to process, abrasion-resistant
Shore hardness jacket	89 ±5 A
Outer-Ø (jacket)	6.6 mm ±5%
Color jacket	green
Nominal voltage	300 V AC
Test voltage	1500 V (wire/wire); 1200 V (wire/shield)
Temperature range (fixed)	-50...+80 °C

The information in this Product-PDF has been compiled with the utmost care.
Liability for the correctness completeness and topicality of the information is restricted to gross negligence. Version: 2024-01-31

Temperature range (mobile)	-40...+80 °C
Bend radius (fixed)	5× outer Ø
Bend radius (moving)	10× outer Ø
No. of bending cycles (C-track)	max. 5 Mio. (25 °C)
Travel speed (C-track)	max. 2 m/s
Torsion stress	±180°/m

The information in this Product-PDF has been compiled with the utmost care.
Liability for the correctness completeness and topicality of the information is restricted to gross negligence. Version: 2024-01-31