PTS645 Series
6 mm Tact Switches

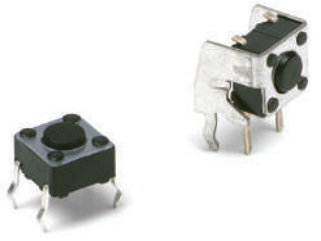

Features/Benefits

- *Compact size 6 x 6 mm*
- *Variety of actuator lengths*
- *Choice of actuation force*
- *RoHS compliant and compatible*

Typical Applications

- *Consumer products*
- *Instrumentation*
- *Computer products*
- *Industrial*

Specification

FUNCTION: Momentary action
CONTACT ARRANGEMENT: SPST, N.O.
TERMINALS: PC pins

Mechanical

ACTUATION FORCE: 130 grams, 160 grams, 200 grams, 260 grams
LIFE EXPECTANCY: 100,000 operations.

Electrical

CONTACT RATING: 50 mA @ 12 V DC.
DIELECTRIC STRENGTH: 250 V AC min.
CONTACT RESISTANCE: 100 mΩ max. initial.
INSULATION RESISTANCE: 10^{11} Ω min.

Environmental

OPERATING TEMPERATURE: -20˚C to 60˚C

Process

SOLDERING: Preheating to 100˚C for 45 sec. max. Keep flux flush with top surface of PCB; do not apply to component side of PCB and area where terminals are located. Soldering to 255˚C for 5 sec. max. Clean by brushing on solder surface. Do not clean switch with solvents.

Packaging

Bulk packaging.

Tape & reel for the SMT type:
Reels of 1,000 pieces for 4,3 and 5,0 mm height
Reels of 700 pieces for 7,0 mm height
Reels of 500 pieces for 9,5 mm height
Reels of 400 pieces for 13,0 mm height

NOTE: Specifications listed above are for switches with standard options.
For information on specific and custom switches, consult Customer Service Center.

How To Order

Our easy build-a-switch concept allows you to mix and match options to create the switch you need. To order, select desired option from each category and and place it in the appropriate box.

P T S 6 4 5 [ ] [ ] [ ] [ ] [ ] [ ] [ ] [ ] [ ] L F S

Termination
S Straight
T Straight with ESD pin
V Vertical

Actuator Shape
NONE Round actuator, All versions
J Square actuator, 2.4 mm side
THT versions only (No ESD pin - not available with Termination "T" style

Actuation Force
L 130 grams
M 160 grams
H 200 grams
K 260 grams

Insertion Type
2 Thru hole
SMTR92* Surface mount, tape & reel

RoHS compliant and compatible.
Silver plated.

Switch height from PCB for S and T only
(H dimension see actuator height drawings)
43 4,3 (.169), thru-hole and SMT
50 5,0 (.197), thru-hole and SMT
70 7,0 (.275), thru-hole and SMT
73 7,3 (.287), thru-hole, square actuator 2.4 mm side only
95 9,5 (.374), thru-hole and SMT
13 13,0 (.512) SMT only

Switch length from front leads for V only
(H dimension see actuator height drawings)
31 3,15 (.124), vertical
39 3,85 (.151), vertical
58 5,85 (.230), vertical
61 6,15 (.242), vertical, square actuator 2.4 mm side only
83 8,35 (.329), vertical

*Only the straight type termination without ESD pin is available in SMT type.

Dimensions are shown: mm
Specifications and dimensions subject to change

PTS645 Series
6 mm Tact Switches

TERMINATION

S STRAIGHT



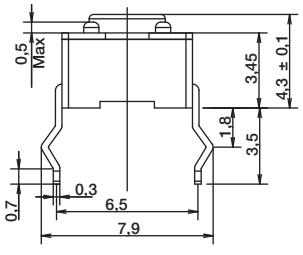

SCHEMATIC

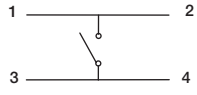

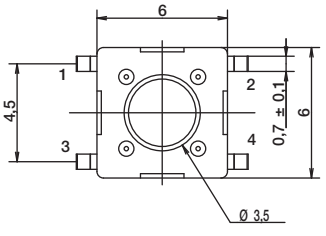

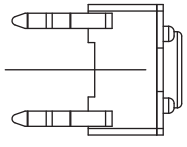

PCB LAYOUT

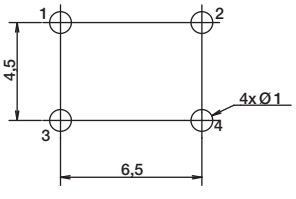

T STRAIGHT WITH ESD PIN

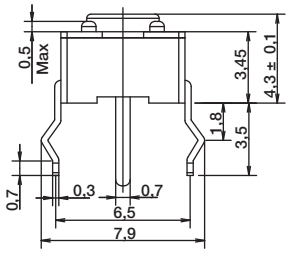

SCHEMATIC

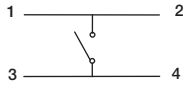

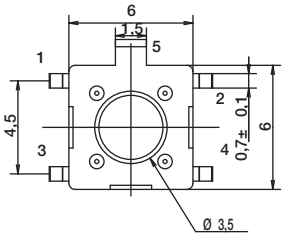

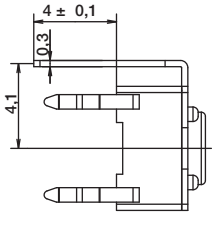

PCB LAYOUT

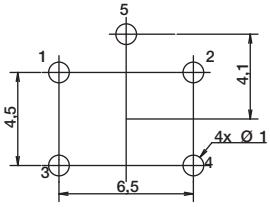

V VERTICAL



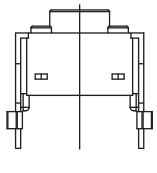

SCHEMATIC

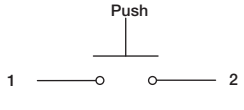

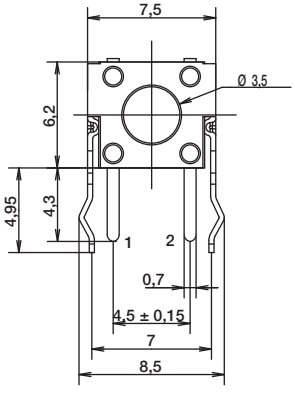

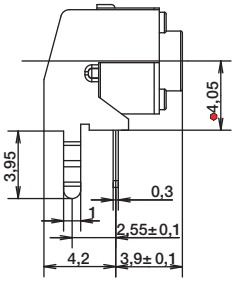

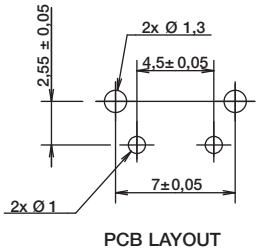

PCB LAYOUT

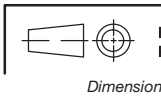

Dimensions are shown: mm
Specifications and dimensions subject to change

PTS645 Series
6 mm Tact Switches

TERMINATION

SMT

FOR 4.3, 5.0, 7.0, 9.5 MM HEIGHT

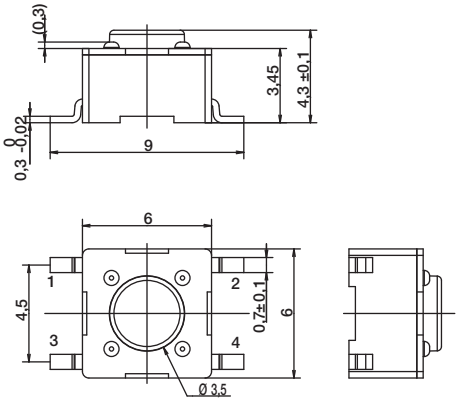

13.0 MM HEIGHT ONLY

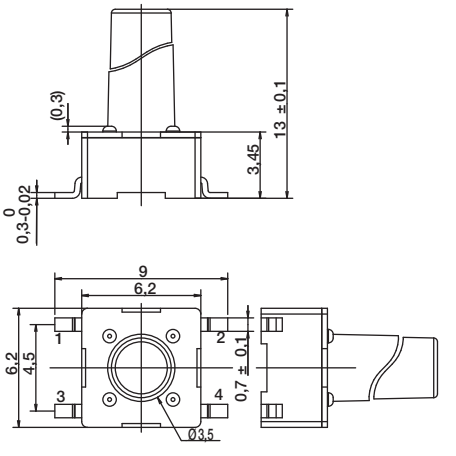

SCHEMATIC

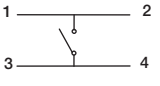

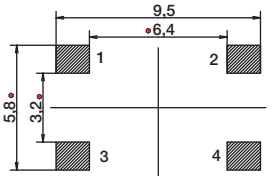

PCB LAYOUT

ACTUATOR SHAPE

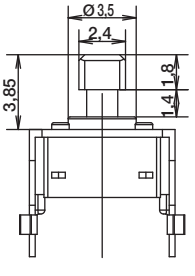

SCHEMATIC

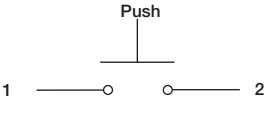

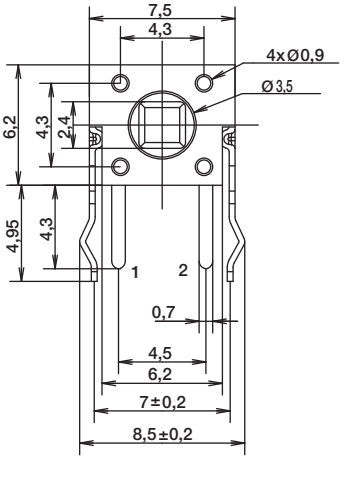

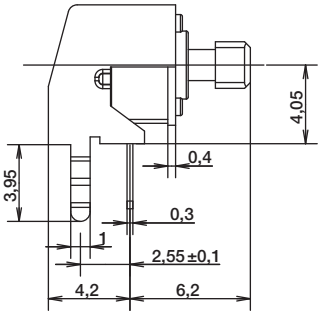

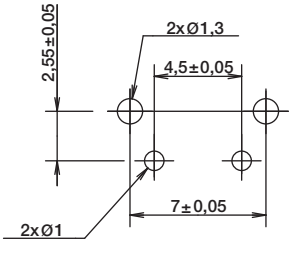

RECOMMENDED PCB LAYOUT

First Angle Projection

Dimensions are shown: mm
Specifications and dimensions subject to change

ACTUATOR SHAPE

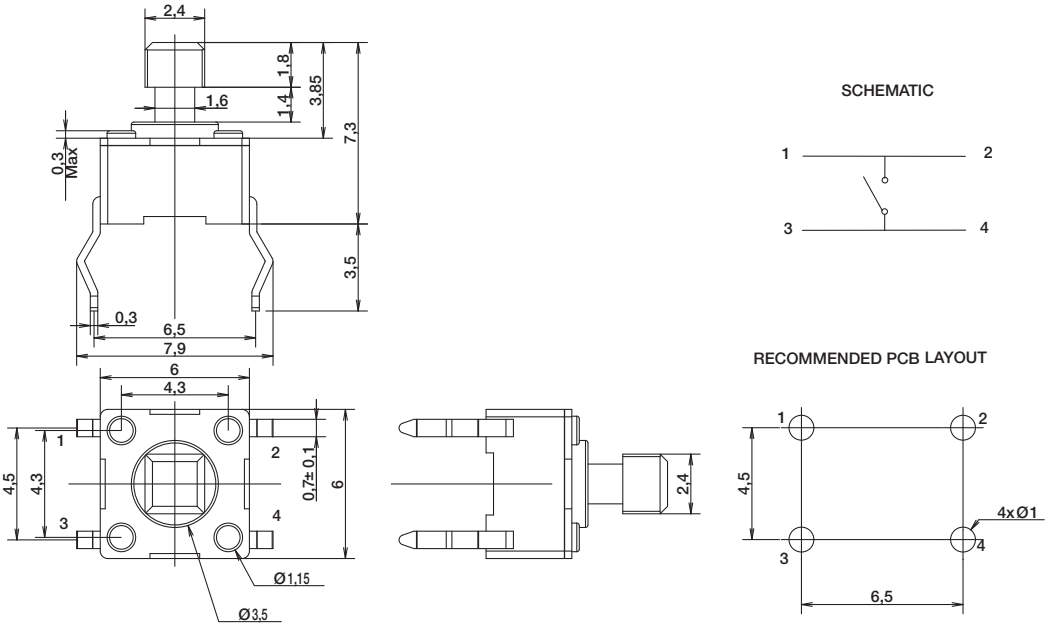

ACTUATION FORCE

OPTION CODE	FORCE
L	130 grams Black
M	160 grams Blue
H	200 grams Gray
K	260 grams Red

ACTUATOR HEIGHT

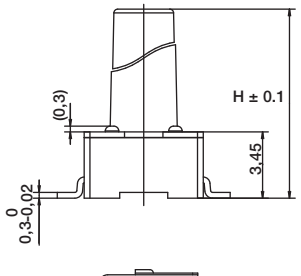

Switch height from PCB for S and T only

OPTION CODE	DIMENSION H	TERMINATION	SCHEMATIC Without EMC pin	SCHEMATIC With EMC pin
43	4,3 (.169)	Thru-hole and SMT		
50	5,0 (.197)	Thru-hole and SMT		
70	7,0 (.275)	Thru-hole and SMT		
95	9,5 (.374)	Thru-hole and SMT		
13	13,0 (.512)	SMT		

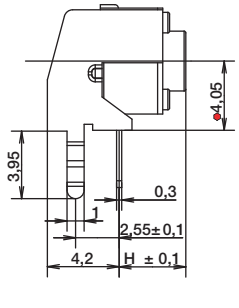

Switch length from front leads for V only

OPTION CODE	DIMENSION H	TERMINATION	SCHEMATIC Without EMC pin	SCHEMATIC With EMC pin
31	3,15 (.124)	Vertical		
39	3,85 (.151)	Vertical		
58	5,85 (.230)	Vertical		
83	8,35 (.329)	Vertical		

TAPE & REEL

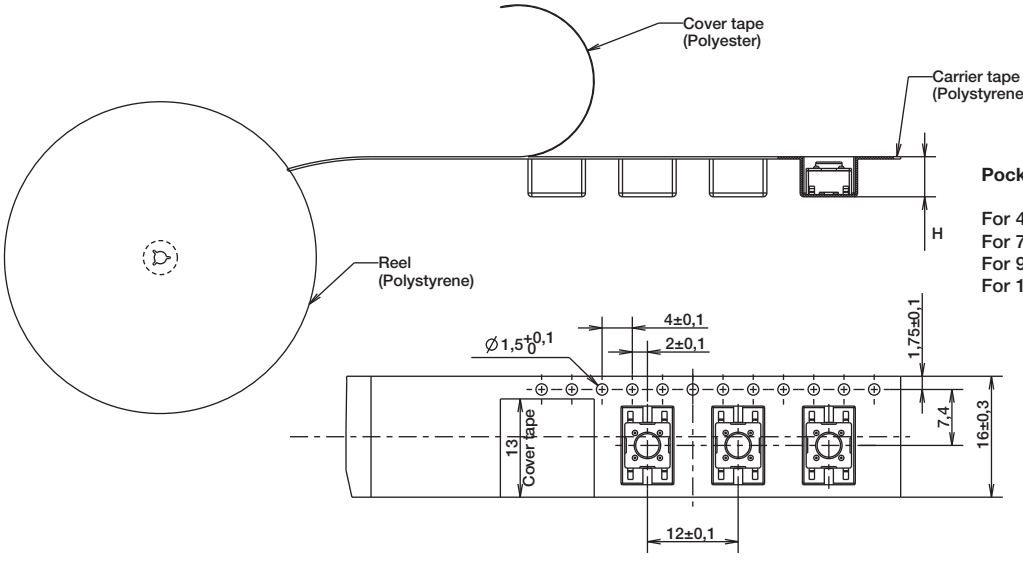

Pocket Height

For 4.3 and 5.0 mm: Height 5.3 mm
For 7.0 mm: Height 7.3 mm
For 9.5 mm: Height 10.3 mm
For 13.0 mm: Height 13.3 mm