E74015

AS-Interface flat cable

AS-i Flat cable EPDM bk 100 m

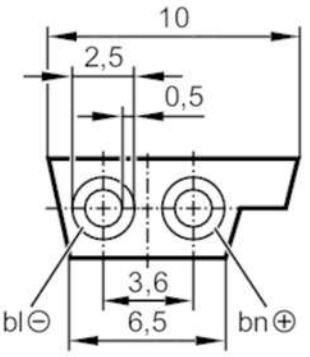

Application		
Special feature		Halogen-free
Application		external 24 V power supply
Electrical data		
Operating voltage	[V]	24 DC
Operating conditions		
Ambient temperature	[°C]	-40...85
Mechanical data		
Weight	[g]	7792
Remarks		
Remarks		100 m supplied on a cable drum
Pack quantity		1 pcs.
Electrical connection		
Cable: 100 m, EPDM, Halogen-free, black; 2 x 1.5 mm²		