Data sheet DS/CM30–EN Rev. L

ControlMaster CM30
Universal process controller, 1/4 DIN

Measurement made easy

Making process control easy

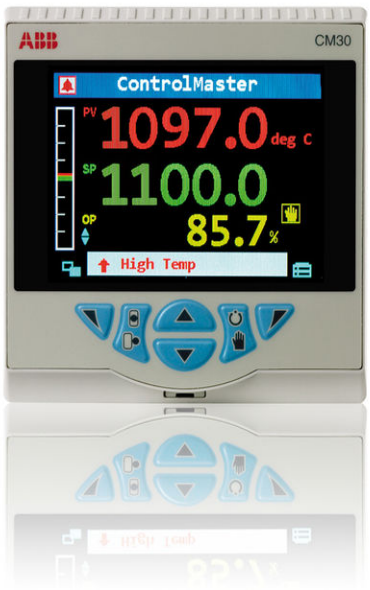

Comprehensive display of process status
— Crystal-clear, full-color TFT display
— User-customizable
— Historical trending

Exceptionally easy to use
— Intuitive user interface and clear text prompts make installation, commissioning and operation quick and simple

Scalable to match application requirements
— Comprehensive hardware and software options

Powerful control functionality
— Cascade, feed-forward, ratio, predictive and adaptive control strategies
— Dual-loop capability

Problem-solving capability
— Flexible functionality including math, logic and totalization providing power to solve complex application requirements

Built to survive
— IP 66 and NEMA 4X environmental protection

Flexible connectivity
— Ethernet and MODBUS® communications

Power and productivity
for a better world™

ControlMaster CM30
Universal process controller, 1/4 DIN

Overview

The ControlMaster CM30 is a highly versatile, 1/4 DIN, universal PID process controller. Detailed process information is presented clearly on the CM30's full-color TFT display and an intuitive operator interface simplifies configuration and operation.
Highly scalable in both hardware and software functionality, a CM30 can be specified easily to meet the needs of virtually any process control application – simple or advanced. Powerful control functions such as adaptive control, math, logic and totalization provide problem-solving flexibility and make the CM30 suitable for a wide range of process applications.
Fully configurable via the easy-to-navigate front panel menus or PC configuration software, the CM30 can be commissioned rapidly and then tuned via the advanced autotune capability.
MODBUS and Ethernet communication options ensure easy integration into a control system.

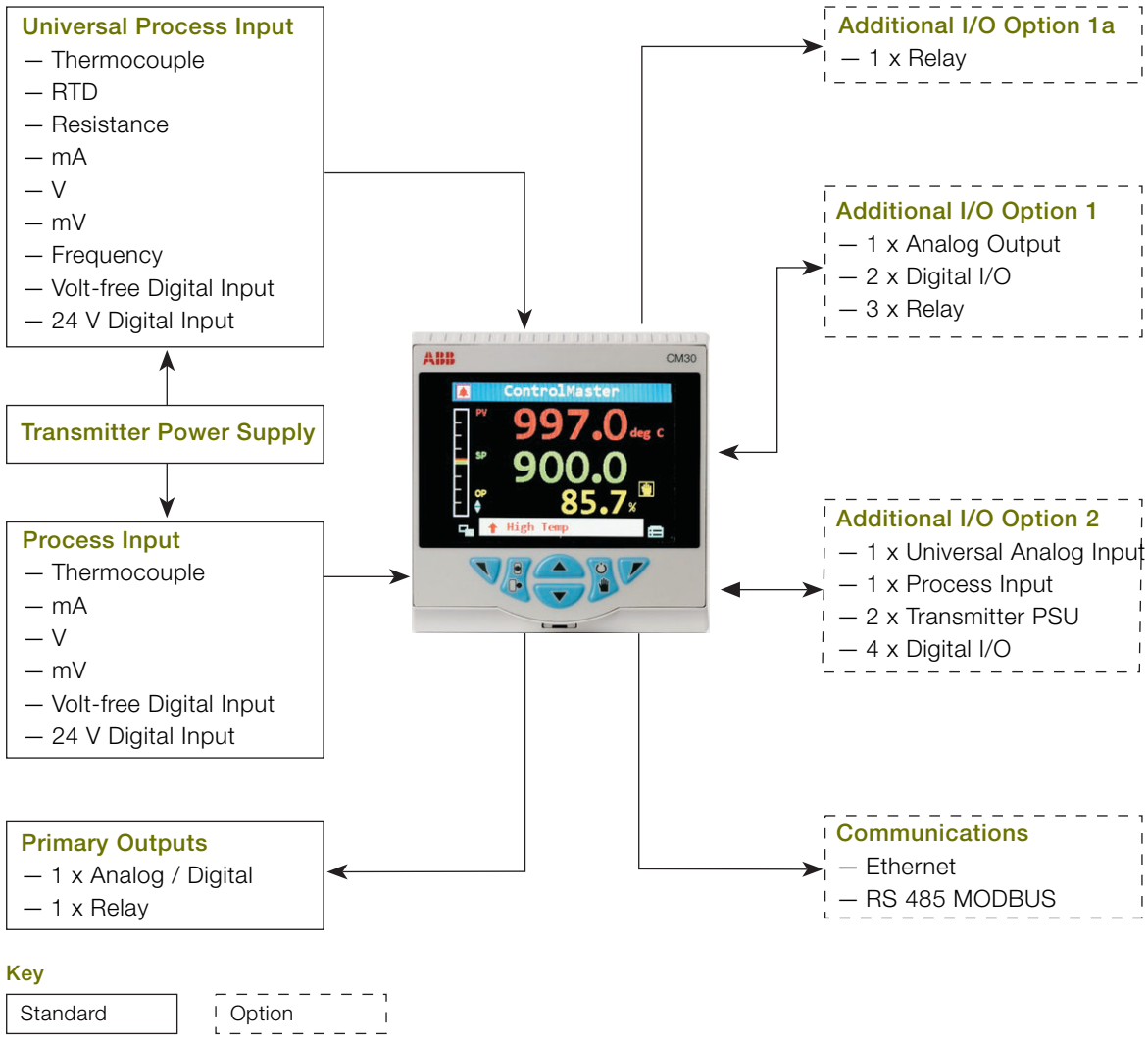

Highly scalable

The CM30 is highly scalable in terms of both hardware and software, to fulfill the demands of the simplest to the most complex process. The basic CM30 meets the needs of a simple control loop. Templates and control functionality can be increased by adding function keys to the basic model. Each function key added provides additional templates and functionality as shown in Fig. 1, while retaining previous templates and functionality. For I/O builds, see also Ordering information on page 23.

Level	Function Keys	Template	Functionality
Base	0 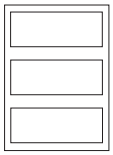	Single loop Single loop with remote setpoint	Process alarms Basic setpoint switching Basic control — Analog PID — On / Off or time proportioning — Auto tune — Split output control
Standard	1 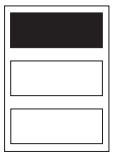	Auto / Manual station low signal selection Auto / Manual station digital signal selection * Analog backup station low signal selection Analog backup station digital signal selection * Single indicator / manual loader Dual indicator / manual loader	Standard setpoint switching * Standard control — Gain scheduling — Motorized valve control † Output tracking Logic Math Custom linearizers Delay timers Real time alarms Template customization
Extended	2 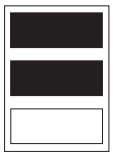	Single loop with feedforward Single loop with feedforward and remote setpoint ‡ Cascade Cascade with remote setpoint ‡ Cascade with feedforward ‡ Ratio controller (internal ratio) Ratio controller (external ratio) ‡ Ratio station (internal ratio) Ratio station (external ratio) ‡	Totalization Advanced control — Feed forward — Predictive control — Adaptive control Historical trending Display customization
Dual Loop	3 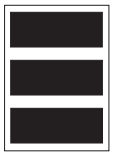	Dual loop – local / local ‡ Dual loop – remote / local ‡ Dual loop – remote / remote ‡	

Recommended I/O Build: * Basic + option board 1, † Basic + option board 1a, ‡ Basic + option boards 1 and 2

Fig. 1: Overview of template options

ControlMaster CM30
Universal process controller, 1/4 DIN

Powerful operator display

The CM30 features a full-color 9 cm (3.5 in.) display for displaying detailed process information to the user. Process details such as alarm messages and diagnostic information are displayed clearly in full text without the need for difficult-to-read scrolling displays.

Example of an operator page

Automatic selection of standard display templates immediately makes best use of the CM30's display. Extensive customization features then enable the displayed information to be tailored to suit the process requirements.

Diagnostics and alarm status display

The diagnostics and alarm status display provides detailed information on any active alarm or diagnostic condition. The operator can see, at-a-glance, the status of any alarm condition present within the process. Additionally, diagnostic messages are presented clearly to the operator, enabling rapid notification and simple diagnosis of any critical instrument status condition.
Historical information of diagnostic messages can also be viewed in the controller's diagnostic log.



Fig. 2: Cascade template display



Fig. 3: Alarm status display

Trend display

Any 2 analog values within the CM30 can be plotted on the trend display to give a short-term process history. This feature enables control efficiency to be monitored against setpoint and assists in tuning during commissioning.

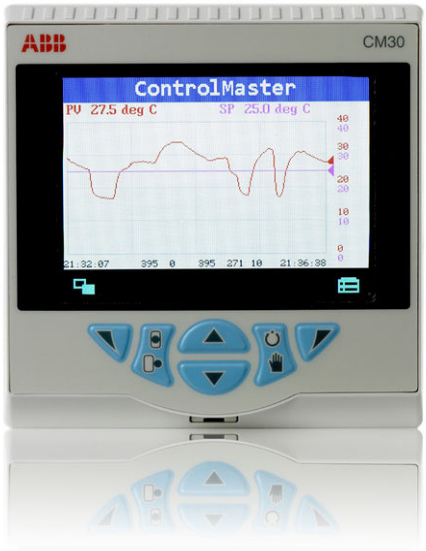

Fig. 4: Trend display

Exceptionally easy to use

The CM30's full text display and simple-to-navigate, pop-up menu makes operation exceptionally easy.
A programmable soft key enables commonly used functions, such as alarm acknowledgement and display selection, to be accessed easily by the operator.



Fig. 5: Pop-up menu

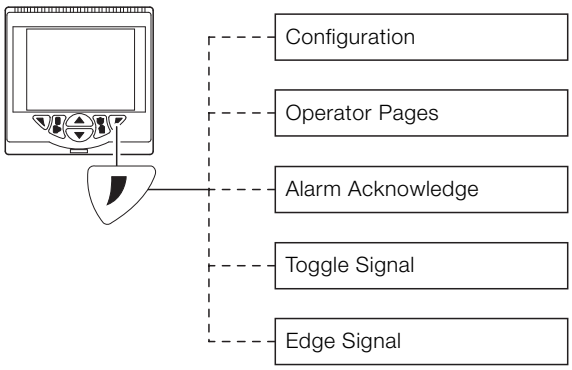

Fig. 6: Programmable soft key

ControlMaster CM30
Universal process controller, 1/4 DIN

Advanced control functionality

The CM30 features many advanced control functions providing the power to bring even the most complex process under control.

Autotune

Once initial configuration is complete, a powerful autotune facility enables automatic calculation of the PID values required, enabling rapid commissioning of the CM30.

Gain scheduling

The CM30's gain scheduling functionality is used for efficient control of non-linear processes. Up to 3 different sets of PID parameters are selected automatically from a reference signal ensuring optimum control response, regardless of the process status.

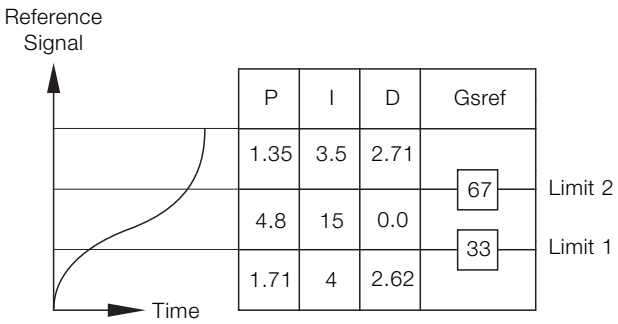

Fig. 7: Gain scheduling example

Predictive control (dead-time compensation)

Control of processes with long dead-times, such as pH dosing in a pipeline, is addressed easily using pPI control. Configured via only 3 parameters (gain, integral time and dead-time), pPI control can also be combined with gain scheduling for optimum control efficiency.

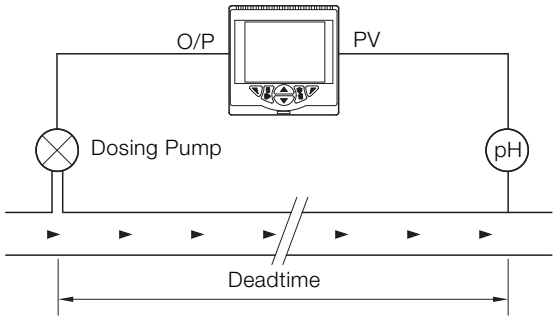

Fig. 8: Predictive control example

Adaptive control

Adaptive control enables the CM30 to adjust its control response automatically to suit changing process dynamics. This makes the CM30 particularly useful for processes with varying or uncontrolled types of load, by providing continuous tuning to maximize control efficiency. Fig. 9 shows a product used in a manufacturing process that is stored in an outside tank. The use of adaptive control within the manufacturing process compensates automatically for the change in product temperature caused by seasonal variation.

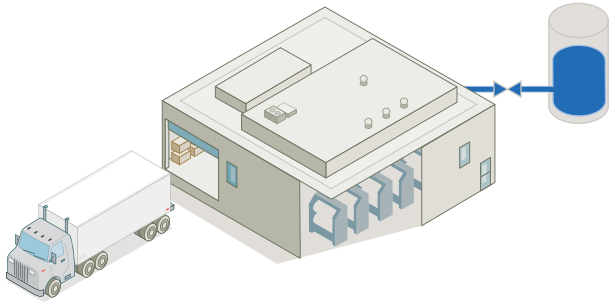

Fig. 9: Adaptive control example

Split output control

The CM30 can also be configured to perform split output control, for example, when both heating and cooling of a single process is required.

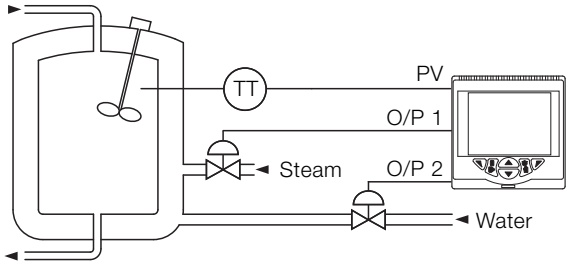

Fig. 10: Split output control example

Remote auto / manual switching

In addition to switching via the front panel, the CM30 can be switched between automatic and manual control mode using an external signal. When switched to manual mode via a digital signal, the value of the control output can be preset, for example, to fully open a control valve automatically during a cleaning cycle.

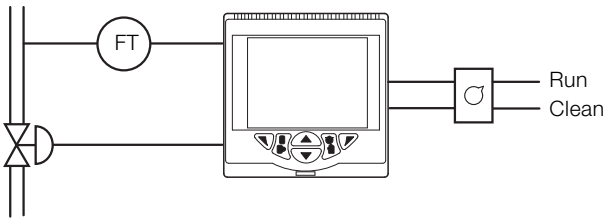

Fig. 11: Remote auto / manual switching

External setpoint selection

The CM30's control setpoint can be selected via external digital signals, for example, simplifying operation by selecting different setpoints using external push buttons.

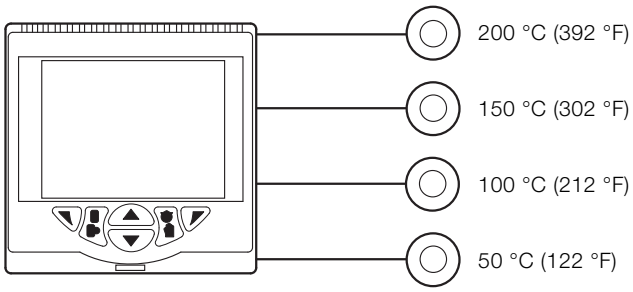

Fig. 12: External setpoint selection

ControlMaster CM30
Universal process controller, 1/4 DIN

Problem solving flexibility

Extensive functionality is available to provide flexible problem-solving capability; making the CM30 much more than just a process controller.

Process alarms
8 independent process alarms can monitor any analog signal within the CM30, enabling extensive process monitoring capability. Alarms can be used to drive physical outputs or soft-wired to other functions within the controller.

Real-time alarms
The 'alarm clock' functionality provided by the CM30's real-time alarms enables time-of-day decisions to be introduced into the controller's actions or specific functions to be triggered routinely at specified times.

Delay timers
Event sequencing is enabled through the use of the CM30's delay timers. A predetermined delay and output duration can be programmed into each delay timer and timers can be linked together.

Custom linearizers
The CM30 has 2 independent 20-point custom linearizers that can be applied to any analog signal within the controller. These linearizers can be used in applications such as level-to-volume conversion of a non-linear tank level or to accommodate special input signals or output devices.

Math
8 math blocks provide arithmetic, averaging, min. / max. hold, square root and signal switching functionality. Simple equations can be performed in a single math block or multiple math blocks can be nested together to construct complex equations.
Signal switching 'multiplexer' math blocks switch between 2 analog signals based on a trigger signal. For example, a backup sensor could be selected automatically on failure of a primary sensor.

Logic
8 comprehensive logic equations provide powerful interlock functionality. Inputs and outputs of the logic equations can be soft-wired to any digital signal within the controller to maximize flexibility.

Totalizer
2 totalizers are available on the CM30. The totalizers can configured to perform multiple functions:
— integration against an analog signal to totalize flow
— counting digital pulses
— totalization of flow based on a frequency signal from an electromagnetic flow meter

Communications

Extensive communication options enable the CM30 to be integrated into larger control systems easily or connected to other process instrumentation.

Ethernet

Optional Ethernet communications enable the CM30 to be integrated in to an Ethernet network quickly. The following functionality is provided:

- **Email**
  Notification of a critical process event or status can be made by email. Multiple events can trigger an email that can be sent to multiple recipients
- **Webserver**
  ControlMaster's integrated webserver enables the current status of the process and controller to be viewed remotely using a standard web browser
- **MODBUS TCP**
  Process values and status can be communicated to and from the CM30 in real-time using MODBUS TCP, enabling it to be integrated easily into larger control systems or connected to a data recorder

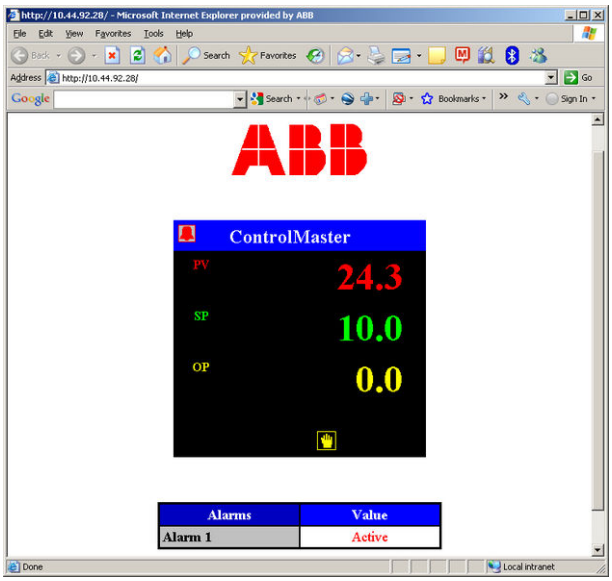

Fig. 13: Webserver

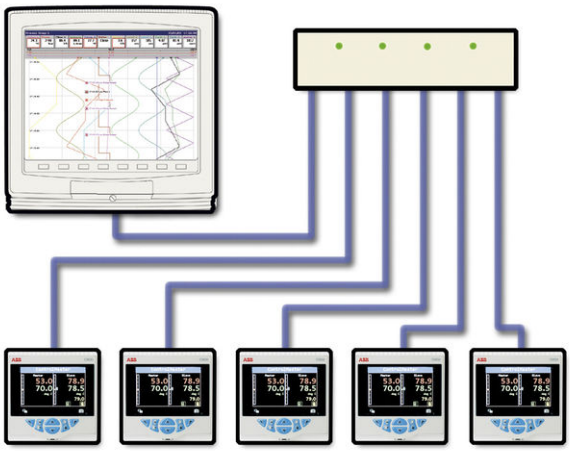

Fig. 14: ControlMasters connected to a ScreenMaster

RS 485 MODBUS

Using RS 485 MODBUS, values and status can be communicated to and from the controller in real-time via an RS 485 connection.

ControlMaster CM30
Universal process controller, 1/4 DIN

PC configuration

In addition to configuration via the front panel, the CM30 can be configured offline using ABB's Asset Vision Basic, a Device Type Manager (DTM)-based configuration package.

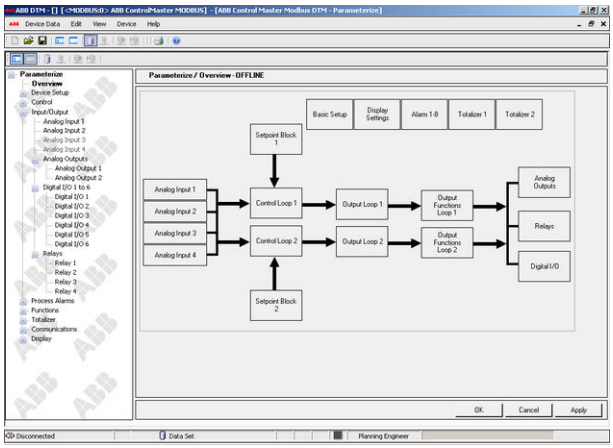

Fig. 15: PC configuration software

Configuration files can be stored locally on a PC and transferred to the controller via its front panel infrared port.

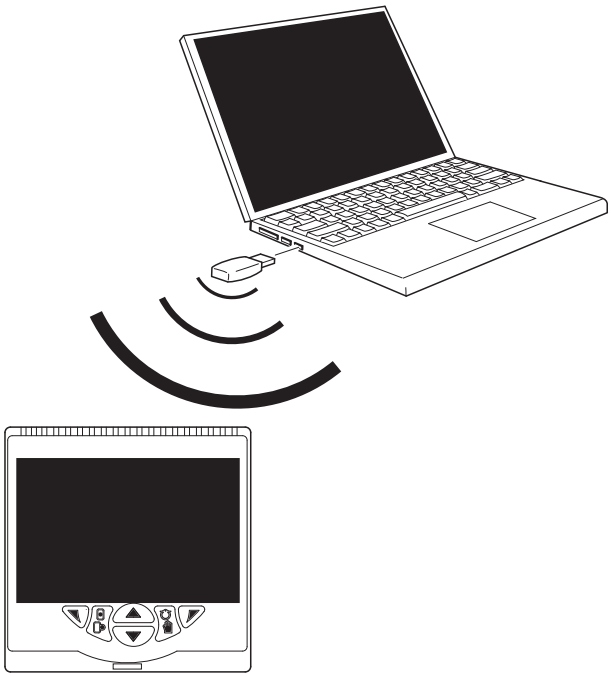

Fig. 16: Transferring a configuration file via the infrared port

PC configuration software for ControlMaster is available for download from www.abb.com/instrumentation.

Application templates

To minimize commissioning time, the CM30 features up to 20 preconfigured control strategy templates. By selecting the required control strategy, the template configures the CM30's function blocks and display automatically. Customization of the preconfigured templates is also possible, providing the flexibility to create customized solutions.

Single loop

This template provides standard, single-loop process control and is available with or without a remote setpoint.
In this example, the temperature of a product heated by a heat exchanger is regulated via the control of the steam feed to the heat exchanger.

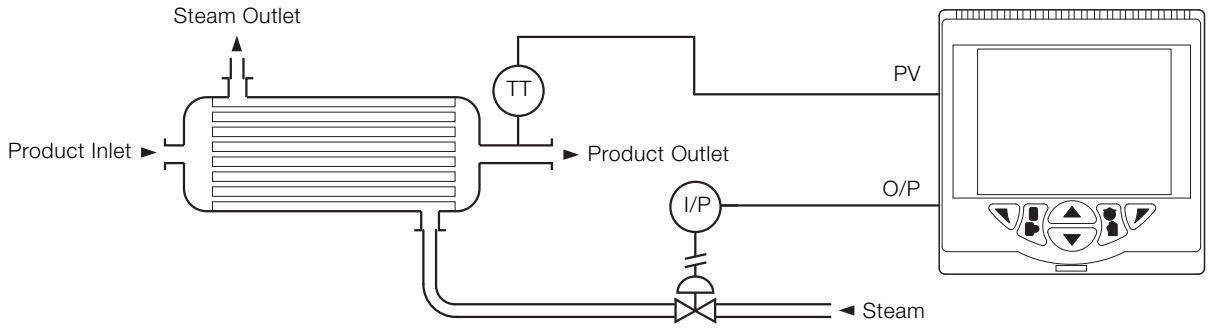

Fig. 17: Single loop

Single loop with feed-forward

This template adds feed-forward functionality to the single-loop template and is available with or without a remote setpoint. Feed-forward control enables the CM30 to anticipate, and respond to, process occurrences not yet detected by the process variable signal.
In this example, the CM30 is regulating the speed of a dosing pump used to neutralize the pH of waste discharge. The flow rate of the waste discharge is monitored and fed forward to the CM30 so that, as the flow rate increases, the speed of the dosing pump increases automatically to neutralize the extra volume of waste discharge.

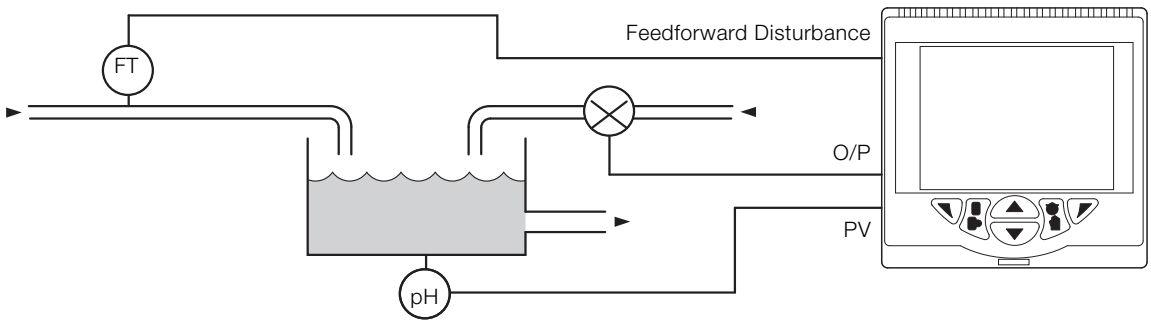

Fig. 18: Single loop with feed-forward

Cascade

The cascade template connects two PID loops together to enhance the control of a master variable (master loop) by manipulation of a slave loop.
In this example, the temperature of a furnace is regulated (master loop) by monitoring and controlling the gas flow rate to the burner (slave loop). By performing slave loop control on the gas flow rate, variations in gas supply can be accounted for and better temperature control performance achieved. This template is available with or without a remote setpoint.

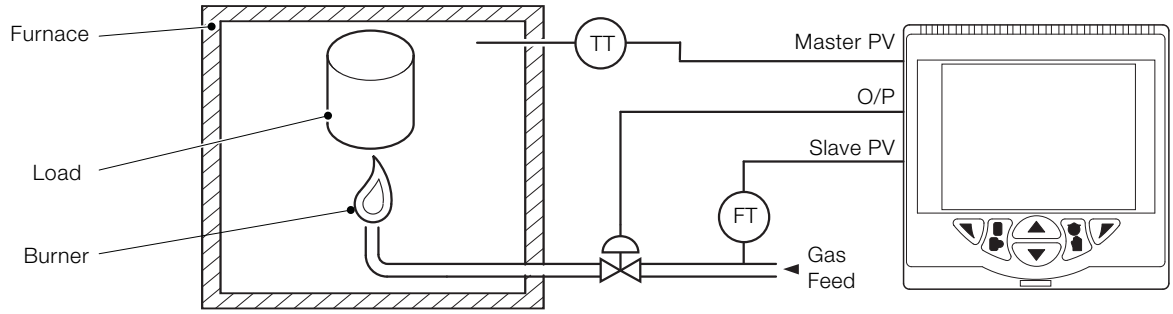

Fig. 19: Cascade

Cascade with feed-forward

This template combines the benefits of the feed-forward and cascade templates.
In this example, the effect of steam demand change on the level within the boiler drum is predicted and accounted for via the feed-forward signal. Feed water supply is then controlled accurately using a 'slave' flow loop that accounts for any variations in water supply.

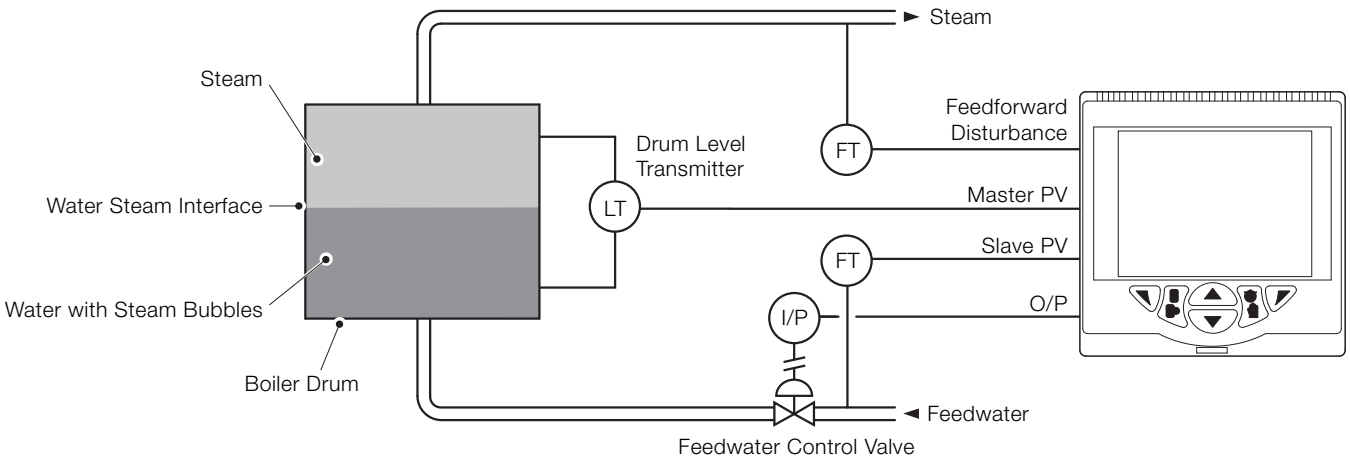

Fig. 20: Cascade with feed-forward

Ratio controller

The ratio controller template configures the CM30 to regulate one process variable against another based on a specified ratio. When using the ratio control template, the CM30's display shows the required ratio (setpoint) and the actual ratio achieved (process variable).
In this example, a controlled amount of 'Flow B' is added to 'Flow A' at a ratio programmed into the CM30.
This template is available with or without an external ratio.

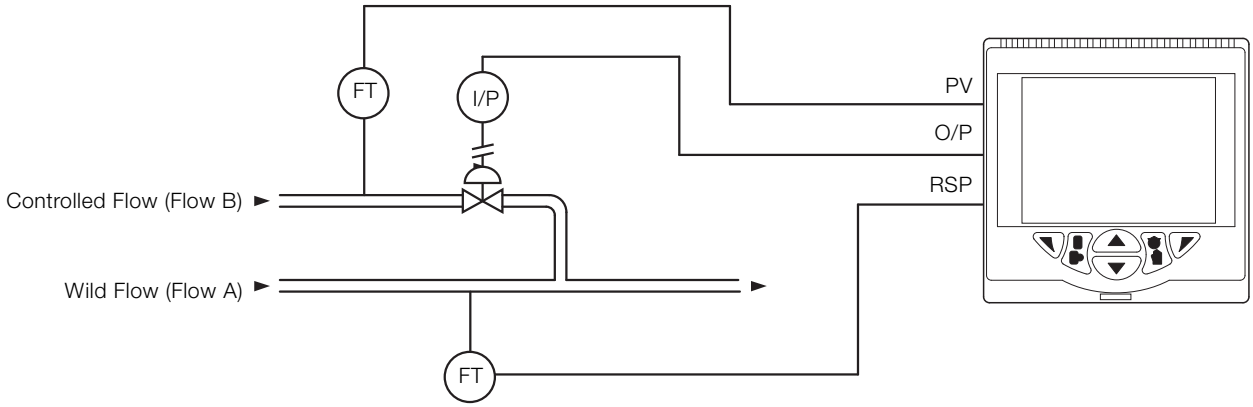

Fig. 21: Ratio controller

Ratio station

The ratio station template configures the CM30 as an indicator and setpoint generator.
In this example, the CM30 is calculating and indicating the ratio of flow A and flow B. The operator is able to enter the desired ratio on the CM30; the CM30 then retransmits the setting to the slave controller. In many applications, the slave controller is a blind or remotely-located device.
This template is available with or without an external ratio.

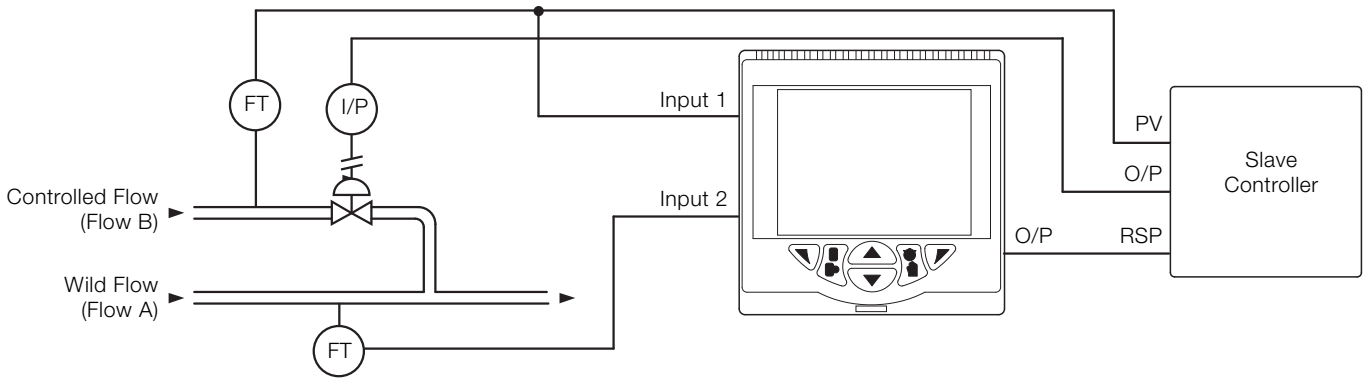

Fig. 22: Ratio station

Auto / Manual station and analog backup station

These templates configure the CM30 to backup a master controller, typically a PLC or DCS. A fault condition is detected via a low output signal from the master controller or a digital signal. On detection of a fault signal, the CM30 can take control of the process (analog backup template), freeze its output or switch to a safe output (auto / manual station template). In this example, a critical control of flow is backed-up by the CM30.

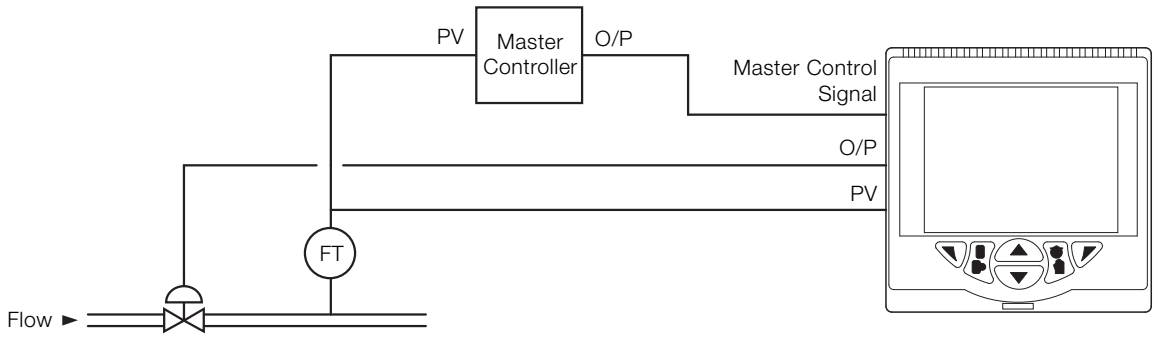

Fig. 23: Auto / Manual station and analog backup station

Dual loop

The dual loop template enables a CM30 to act as 2 independent controllers and is available with a remote setpoint for either, or both, control loops. In this example, the temperature and humidity of a climatic chamber are controlled independently.

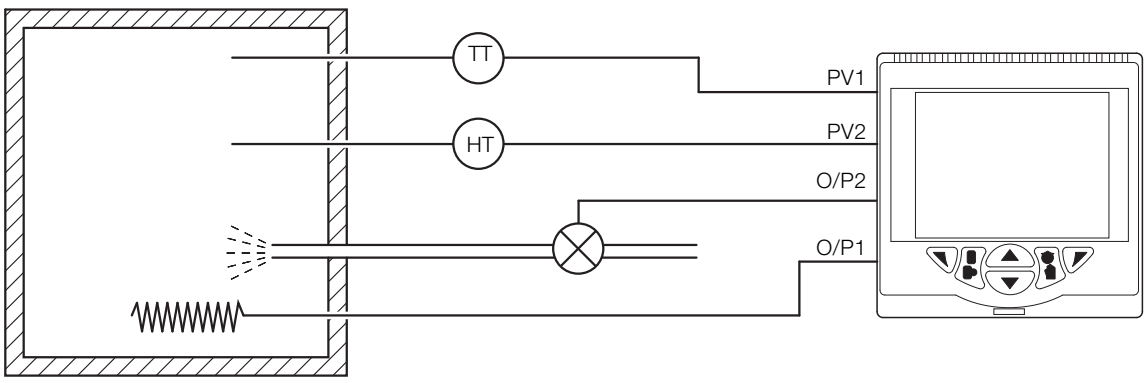

Fig. 24: Dual loop

Technical specification

Operation

Display

Color, 1/4 VGA TFT, liquid crystal display (LCD) with built-in backlight

Language

English, German, French, Italian and Spanish

Operator keypad

6 tactile membrane keys

Trend display

— Recording of 2 variables
— Configurable sample rate (1 second to 5 minutes)
— 272 samples displayed on screen

Security

Password protection

Basic / Advanced – user-assigned password protection (not set at factory)

Standard functions

Control strategies

Base templates:
— Single loop with local setpoint
— Single loop with remote setpoint

Standard templates:
— Auto / Manual station (low signal detection)
— Auto / Manual station (digital signal selection)
— Analog backup station (low signal detection)
— Analog backup station (digital signal detection)
— Single indicator / manual loader station
— Dual indicator / manual loader station

Extended templates:
— Single loop with feedforward
— Single loop with feedforward and remote setpoint
— Cascade
— Cascade with remote setpoint
— Cascade with feedforward
— Ratio controller with internal ratio
— Ratio controller with external ratio
— Ratio station with internal ratio
— Ratio station with external ratio

Dual loop templates:
— Dual loop with local setpoints
— Dual loop with remote setpoint on 1 and local setpoint on 2
— Dual loop with remote setpoint on both

Control output types

Current proportioning
Time proportioning
On / Off
Motorized valve with feedback
Motorized valve without feedback
Split output – with combinations of relay, digital output and current outputs

Control parameters

Proportional band: *
— 0.0 to 999.9 %

Integral: *
— 0 to 10000 s

Derivative: *
— 0.0 to 999.9 s

Manual Reset:
— 0.0 to 100.0 %

* 3 sets of PID parameters when used with Gain Scheduling facility

ControlMaster CM30
Universal process controller, 1/4 DIN

Setpoints
Local:
— 4, selectable via digital input or front panel

Remote:
— selectable via digital input or front panel keys

Auto tune
On-demand calculation of control settings

Process alarms
Number:
— 8

Types:
— High / Low process
— High / Low latch

Source
— Fully configurable
(for example – PV, Analog input, Math block inbuilt, OP control loop deviation)

Hysteresis:
— Level and time

Alarm enable:
— Enable / Disable individual alarms via a digital signal

Acknowledgement
Via front panel keys or digital signals

Real-time alarms
Number:
— 2

Programmable:
— Time
— Day
— Duration

Math blocks
Number:
— 8

Operators:
— +, –, x, /
— Average, Maximum, Minimum
— High / Low / Median select
— Square root
— Multiplexer

Delay timers
Number:
— 2

Programmable:
— Delay
— Duration

Logic equations
Number:
— 8

Elements:
— 15 per equation

Operators:
— OR, AND, NOR, NAND, NOT, EXOR

Custom linearizer
Number:
— 2

Elements:
— 20 breakpoints

Analog inputs

Universal process inputs

Number:
— 2 (1 standard, 1 optional)

Type:
— Voltage
— Current
— Resistance (ohms)
— 3-Wire RTD
— Thermocouple
— Digital volt-free
— Digital 24 V
— Frequency (Input 1)
— Pulse

Non-universal process inputs

Number:
— 2 (1 standard, 1 optional)

Type:
— Voltage
— Current
— Thermocouple *
— Digital volt-free
— Digital 24 V

Thermocouple types

B, E, J, K, L, N, R, S, T

Resistance thermometer

Pt100

Other linearizations

$\sqrt{x}$, $x^{3/2}$, $x^{5/2}$, custom linearization

Digital filter

Programmable 0 to 60 s

Display range

–9999 to 99999

Update rate

125 ms

Common mode noise rejection

> 120 dB at 50 / 60 Hz with 300 Ω imbalance resistance

Normal (series) mode noise rejection

> 60 dB at 50 / 60 Hz

CJC rejection ratio

0.05 °C/°C change in ambient temperature

Temperature stability

0.02 %/°C or 2 µV/°C (1 µV/°F)

Long term (input) drift

< 0.1 % of reading or 10 µV annually

Input impedance

> 10 MΩ (mV input)
10 Ω (mA input)

* Only if universal process input is configured as 'Thermocouple'

ControlMaster CM30
Universal process controller, 1/4 DIN

Inputs

Thermocouple	Maximum range °C (°F)	Accuracy (% of reading)
B	–18 to 1800 (0 to 3270)	0.1 % or ±2 °C (3.6 °F) (above 200 °C [392 °F]) *
E	–100 to 900 (–140 to 1650)	0.1 % or ±0.5 °C (0.9 °F)
J	–100 to 900 (–140 to 1650)	0.1 % or ±0.5 °C (0.9 °F)
K	–100 to 1300 (–140 to 2350)	0.1 % or ±0.5 °C (0.9 °F)
L	–100 to 900 (–140 to 1650)	0.1 % or ±1.5 °C (2.7 °F)
N	–200 to 1300 (–325 to 2350)	0.1 % or ±0.5 °C (0.9 °F)
R	–18 to 1700 (0 to 3000)	0.1 % or ±1 °C (1.8 °F) (above 300 °C [540 °F]) *
S	–18 to 1700 (0 to 3000)	0.1 % or ±1 °C (1.8 °F) (above 200 °C [392 °F]) *
T	–250 to 300 (–400 to 550)	0.1 % or ±0.5 °C (0.9 °F) (above –150 °C [–238 °F]) *

* Accuracy is not guaranteed at temperatures below this value

RTD	Maximum range °C (°F)	Accuracy (% of reading)
Pt100	–200 to 600 (–325 to 1100)	0.1 % or ±0.5 °C (0.9 °F)

Linear inputs	Standard analog input	Accuracy (% of reading)
Millivolts	0 to 150 mV	0.1 % or ±20 µV
Milliamps	0 to 50 mA	0.2 % or ±4 µA
Volts	0 to 25 V	0.2 % or ±20 mV
Resistance (low)	0 to 550 Ω	0.2 % or ±0.1 Ω
Resistance (high)	0 to 10 kΩ	0.5 % or ±10 Ω
Sample Interval	125 ms per sample	

Digital inputs	
Type	Volt-free or 24 V
Minimum pulse duration	Analog inputs 1 and 2: — Single inputs configured – 250 mS — Both inputs configured as analog or digital – 500 mS Analog inputs 3 and 4: — Single inputs configured – 250 mS — Both inputs configured as analog or digital – 500 mS Consider analog inputs 1/2 and 3/4 independently

Frequency input*	
Frequency range	0 to 6000 Hz
1-signal	15 to 30 V
0-signal	–3 to 5 V

*For use with devices with open collector outputs

Outputs

Controls / Retransmission outputs

Number:
— 2 (1 standard, 1 optional)

Type:
— Configurable as analog or digital pulse

Isolation:
— Galvanically isolated from the rest of the circuitry, 500 V for 1 minute

Analog range:
— 0 to 20 mA programmable

Load:
— 750 Ω max.

Accuracy:
— 0.25 % of output or ±10 µA

Relays

Number:
— 4 (1 standard, 3 optional)

Type:
— Standard with changeover contacts
— Optional contacts selectable as NO or NC (by jumper)

Contact ratings:
— 5 A, 240 V

Update rate:
— 125 ms

Digital I/O

Number:
— 6 (2 standard, 4 optional)

Type:
— User-programmable as input or output
— Minimum input pulse duration – 125 ms

Input:
— Volt-free or 24 V DC
— 1-signal 15 to 30 V
— 0-signal –3 to 5 V
— Conforms to IEC 61131-2

Output:
— Open collector output
— 30 V, 100 mA max. switched
— Conforms to IEC 61131-2

Update rate:
— 125 ms

2-Wire transmitter power supply

Number:
— 2 (1 standard, 1 optional)

Voltage:
— 24 V DC

Drive:
— 2 Loops for each transmitter PSU, 45 mA max.

ControlMaster CM30
Universal process controller, 1/4 DIN

Communications
Note. Only one communications option can be fitted per controller.

IrDA service port (standard)
Baud rate:
— Up to 115 kBaud

Distance:
— Up to 1 m (3 ft)

Functions:
— Firmware upgrade
— Configuration upload / download

Ethernet (optional)
Type:
— 10BaseT

Connector:
— RJ 45

Protocols:
— TCP/IP
— HTTP
— MODBUS TCP (Slave)

Web server:
— Built-in – enables remote monitoring using standard web browsers

Email
— Can be configured to be sent on the occurrence of a specified event
— Up to 3 recipients
— Up to 4 trigger sources with configurable tag

MODBUS * RTU (optional)
Baud rate:
— Up to 115 kBaud

Isolation:
— Galvanically isolated from the rest of the circuitry, 500 V DC for 1 minute

* MODBUS is a registered trademark of the MODBUS-IDA organization

EMC

Emissions & immunity

Meets requirements of IEC 61326 for an Industrial Environment

Environmental

Operating temperature range

–0 to 55 °C (32 to 131 °F)

Operating humidity range

5 to 95 % RH (non-condensing)

Storage temperature range

–20 to 70 °C (–4 to 158 °F)

Enclosure sealing

Front face:

— IP 66 & NEMA 4X

Rest of enclosure:

— IP 20

Vibration

Conforms to EN60068–2–6

Safety

Approvals and certifications

EN 61010-1

cULus

General safety

Pollution category 2

Insulation category 2

Isolation

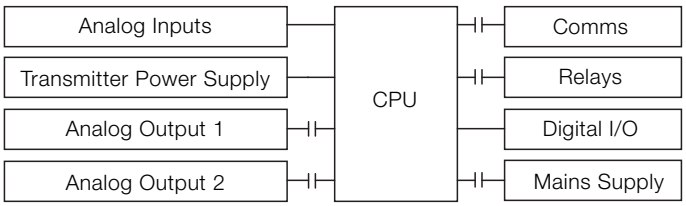

Key

⊣⊢ = Isolation

Electrical

Supply ranges

100 V to 240 V AC ±10 % (90 V min. to 264 V max.) 50 / 60 Hz

10 to 36 V DC (optional)

Power consumption

10 W max.

Power interruption protection

No effect for interrupts of up to 60 ms

Physical

Size

97 x 97 x 141 mm (3.8 x 3.8 x 5.5 in.)

Weight

0.5 kg (1.1 lb) approx. (unpacked)

Panel cutout

92 x 92 mm (3.6 x 3.6 in.), 121 mm (4.8 in.) behind panel

Case material

Glass-filled polycarbonate

ControlMaster CM30
Universal process controller, 1/4 DIN

Electrical connections

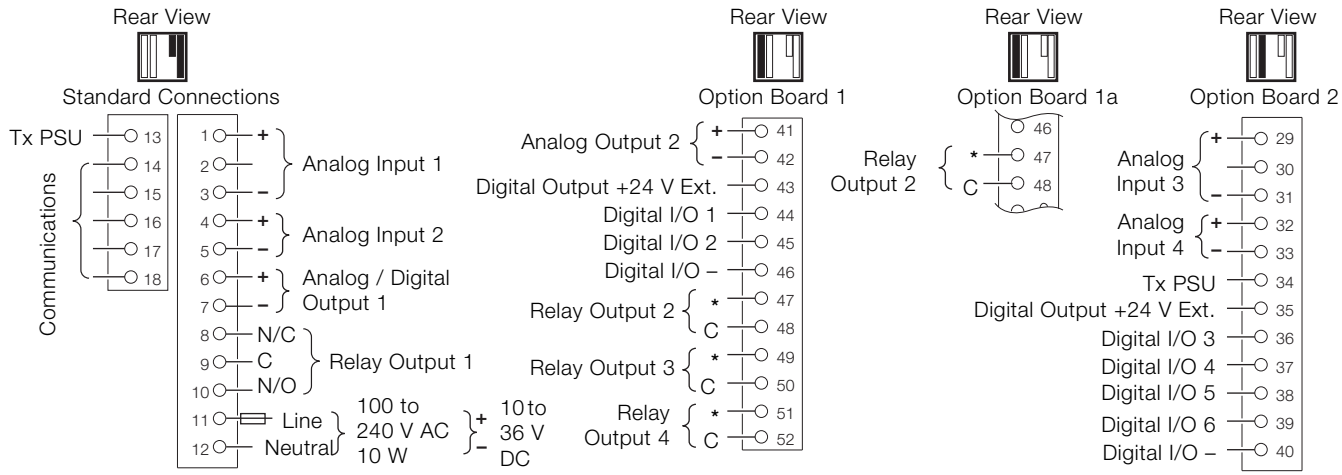

* N/O or N/C selection made via jumper

Overall dimensions

Dimensions in mm (in.)

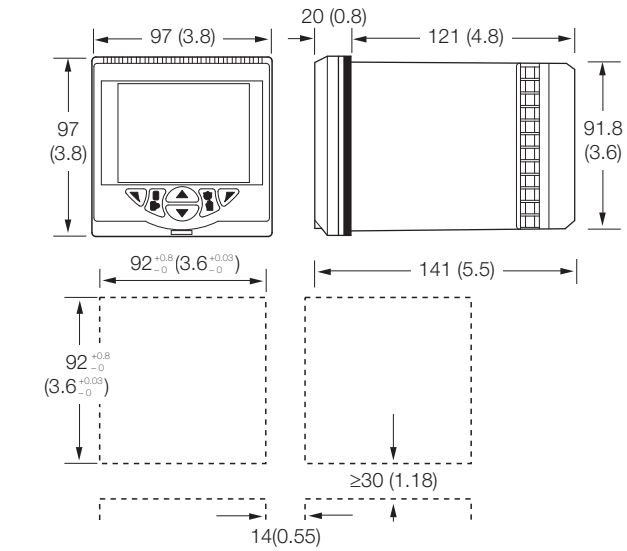

Standard accessories

Included with each controller:

— Panel mounting clamps
— Instruction manual
— Bezel release tool
— Cold junction thermistor

Optional accessories

— PC configuration kit CM30/0712
— After-sales engineered configuration service ENG/CON

Ordering information

ControlMaster CM30 universal process controller, 1/4 DIN	CM30/	X	X	X	X	X	X	X	/XXX
I/O build									
2 analog inputs, 1 analog O/P and 1 relay (Basic)		0							
2 analog inputs, 1 analog output and 2 relays (Basic + option board 1a)		1							
2 analog inputs, 2 analog outputs, 2 digital I/O and 4 relays (Basic + option board 1)		2							
4 analog inputs, 2 analog outputs, 6 digital I/O and 4 relays (Basic + option boards 1 and 2)		3							
Template / Functionality level									
Base			0						
Standard			S						
Extended			E						
Dual loop			D						
Communications									
None				0					
Ethernet				E					
RS 485 MODBUS				M					
Approval									
Standard CE					S				
cULus approval					U				
Power Supply									
100 … 240 V AC						0			
10 … 36 V DC						1			
Language									
English							E		
German							G		
French							F		
Italian							I		
Spanish							S		
Special features									
None								0	
Unbranded front panel *								B	
Configuration									
Standard									STD
Custom configuration (customer to complete and supply CM30 custom configuration sheet – INF11/091–EN)									CUS
Engineered configuration (customer to supply configuration details required)									ENG

* Not available in conjunction with cULus approval.

Contact us

ABB Limited
Process Automation
Howard Road
St. Neots
Cambridgeshire PE19 8EU
UK
Tel: +44 (0)1480 475321
Fax: +44 (0)1480 217948

ABB Inc.
Process Automation
125 E. County Line Road
Warminster
PA 18974
USA
Tel: +1 215 674 6000
Fax: +1 215 674 7183

www.abb.com/recorders

Note
We reserve the right to make technical changes or modify the contents of this document without prior notice. With regard to purchase orders, the agreed particulars shall prevail. ABB does not accept any responsibility whatsoever for potential errors or possible lack of information in this document.

We reserve all rights in this document and in the subject matter and illustrations contained therein. Any reproduction, disclosure to third parties or utilization of its contents in whole or in parts – is forbidden without prior written consent of ABB.

Copyright© 2013 ABB
All rights reserved

3KXC403001R1001

DS/CM30–EN Rev. L 04.2013

Sales

Service

Software

Power and productivity
for a better world™