Brand of NTN Group

Technical data

SESFL208N

Bearing units



Stainless steel cast housing,stainless steel insert ball bearing with eccentric locking collar, single lip seal, food grease

KIT CONTENT

SES208, SFL208N

VISUAL (S)

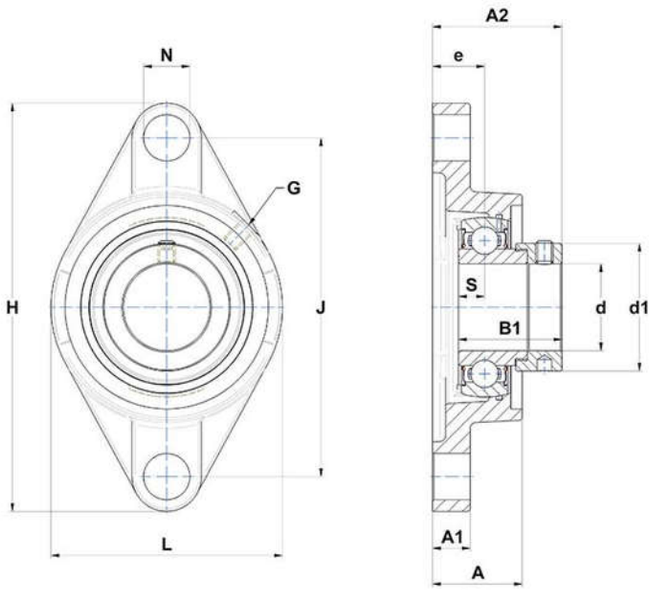

PRODUCT DEFINITION

Brand	SNR
A - Housing height	36 mm
A1 - Housing foot height / flange height	15 mm
A2 - Total height from mounting surface	55,7 mm
B - Width of Inner Ring	30,2 mm

SESFL208N
Bearing units

PRODUCT DEFINITION	
B1 - Overall width Inner Ring	43,7 mm
d - Shaft diameter	40 mm
d1 - Outer dia of eccent. Lock. collar / nut of adapter sleeve	60,3 mm
e - Distance mounting surface to bearing center	21 mm
G - Grease fitting	M6x1
H - Housing length, width or diameter	172 mm
J - Mounting holes distance	144 mm
L - Housing width / diameter	100 mm
N - Mounting hole dimension	16 mm
S - Distance front side/bearing centre	9 mm

PRODUCT PERFORMANCE	
C - Dynamic load rating	32000000 mN
C0 - Static load rating	19300000 mN
Operating temperature min.	253,15 °K
Operating temperature max.	373,15 °K

OTHER FEATURES	
Mass	1,65 kg
Recommended tightening torque for set screw	8.3 N-m