BF0031D060

CONTROL RELAY WITH DC COIL, 60VDC, 3NO AND 1NC



Product designation			Auxiliary contactor
Product type designation			BF00
Contact characteristics			
Number of poles		Nr.	4
Rated insulation voltage Ui IEC/EN		V	690
Rated impulse withstand voltage Uimp		kV	6
Operational frequency			
	min	Hz	25
	max	Hz	400
IEC Conventional free air thermal current Ith		A	10
Operational current Ie			
	AC-1 (≤55°C)	A	0
Short-time allowable current for 10s (IEC/EN60947-1)		A	0
Protection fuse			
	gG (IEC)	A	25
Tightening torque for terminals			
	min	Nm	1.5
	max	Nm	1.8
	min	lbin	1.1
	max	lbin	1.5
Tightening torque for coil terminal			
	min	Nm	0.8
	max	Nm	1
	min	lbin	0.8
	max	lbin	0.74
Max number of wires simultaneously connectable		Nr.	2
Conductor section			
AWG/Kcmil			
	max		10
Flexible w/o lug conductor section			
	min	mm²	1
	max	mm²	6
Flexible c/w lug conductor section			
	min	mm²	1
	max	mm²	4
Flexible with insulated spade lug conductor section			
	min	mm²	1
	max	mm²	4
Power terminal protection according to IEC/EN 60529			IP20 when properly wired
Mechanical features			
Operating position			
	normal		Vertical plan
	allowable		±30°

The characteristics described in this document are subject to updates or modifications at any time. The descriptions, technical and functional information, illustrations and instructions in this brochure are purely illustrative, and are consequently not contractually binding

Fixing				Screw / DIN rail 35mm
Weight			g	496
Conductor section				
	AWG/kcmil conductor section			
		max		10
Auxiliary contact characteristics				
Thermal current Ith			A	10
IEC/EN 60947-5-1 designation				A600 - P600
Operating current AC15				
		230V	A	3
		400V	A	1.9
		500V	A	1.4
Operating current DC12				
		110V	A	5.7
Operating current DC13				
		24V	A	5.7
		48V	A	2.9
		60V	A	2.3
		110V	A	1.25
		125V	A	1.1
		220V	A	0.55
		600V	A	0.2
Operations				
Mechanical life			cycles	20000000
Safety related data				
Performance level B10d according to EN/ISO 13489-1				
		mechanical load	cycles	20000000
Mirror contats according to IEC/EN 609474-4-1				YES
EMC compatibility				yes
DC coil operating				
DC rated control voltage			V	60
DC operating voltage				
	pick-up			
		min	%Us	70
		max	%Us	125
	drop-out			
		min	%Us	10
		max	%Us	40
Average coil consumption ≤20°C				
		in-rush	W	5.4
		holding	W	5.4
Max cycles frequency				
Mechanical operation			cycles/h	3600
Operating times				
Average time for Us control				
	in DC			
		Closing NO		
			min	ms 54
			max	ms 66
		Opening NO		
			min	ms 14
			max	ms 17

The characteristics described in this document are subject to updates or modifications at any time. The descriptions, technical and functional information, illustrations and instructions in this brochure are purely illustrative, and are consequently not contractually binding

	Closing NC			
		min	ms	24
		max	ms	30
	Opening NC			
		min	ms	47
		max	ms	57

UL technical data

General USE				
	Auxiliary contacts			
		AC current	A	10
Contact rating of auxiliary contacts according to UL				A600 - P600

Ambient conditions

Temperature				
	Operating temperature			
		min	°C	-50
		max	°C	70
	Storage temperature			
		min	°C	-60
		max	°C	80
Max altitude			m	3000

Resistance & Protection

Pollution degree				3

Dimensions

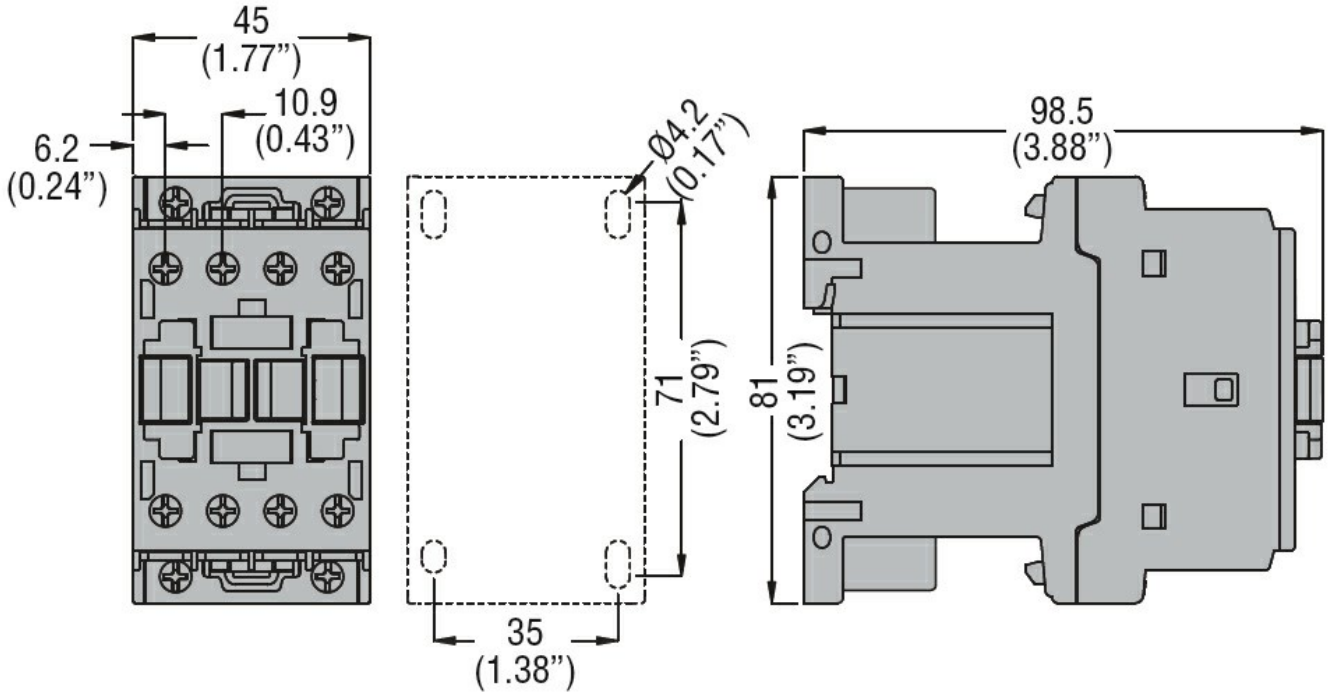

Wiring diagrams

The characteristics described in this document are subject to updates or modifications at any time. The descriptions, technical and functional information, illustrations and instructions in this brochure are purely illustrative, and are consequently not contractually binding

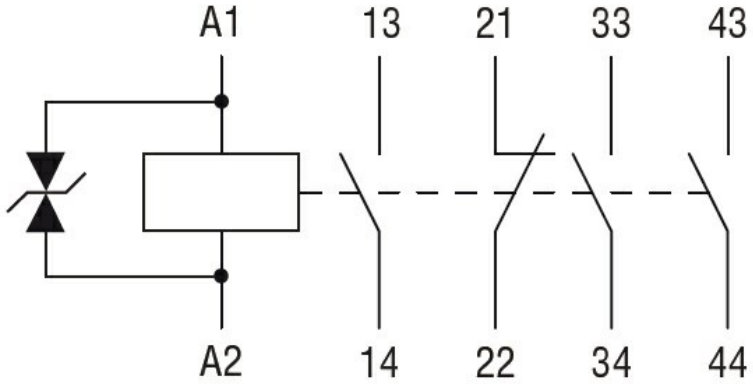

Certifications and compliance

Compliance

CSA C22.2 n° 60947-1
CSA C22.2 n° 60947-5-1
IEC/EN 60947-1
IEC/EN 60947-5-1
UL 60947-1
UL 60947-5-1

Certificates

CCC
cULus
EAC

ETIM classification

ETIM 8.0	EC000196 - Contactor relay

The characteristics described in this document are subject to updates or modifications at any time. The descriptions, technical and functional information, illustrations and instructions in this brochure are purely illustrative, and are consequently not contractually binding