E20987

Fixture for mounting and fine adjustment of laser sensors

MOUNTING SET OG/LASER

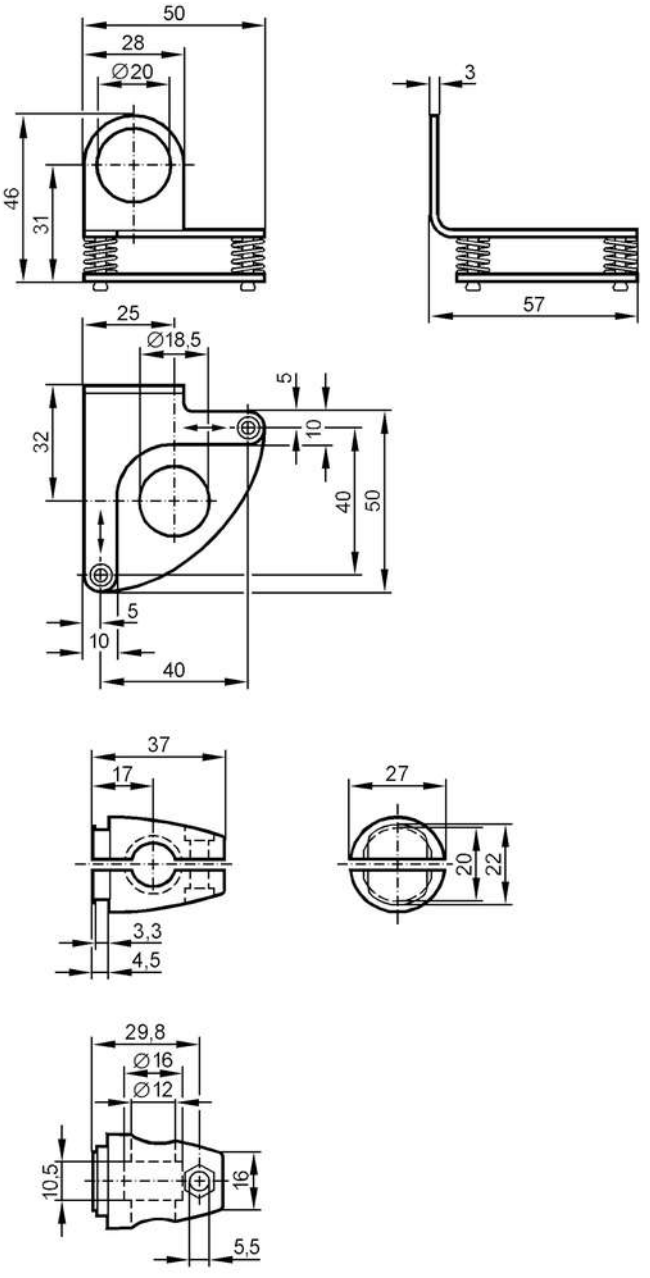

Application		
Design		clamp mounting
Mechanical data		
Weight	[g]	234.5
Type of mounting		Mounting rod; (Ø 12 mm)
Materials		fixture: stainless steel (1.4571/316Ti); Clamp: diecast zinc
Alignment range		fine adjustment in 2 axes ± 3°
Accessories		
Items supplied		head cap screw: 1 x M10 x 55
Remarks		
Pack quantity		1 pcs.