EUK-704.925.4 - Protection cover

704.925.4 - Aluminium Protection cover for EAO Series 04 Flush Selector Switch

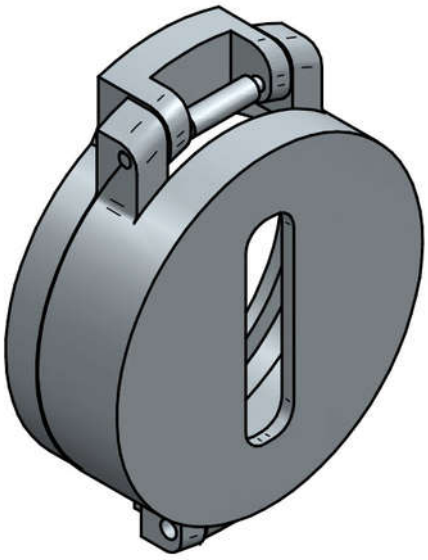

Attention: The preview is based on a sample product. This can differ from your current configuration.

Attribute

Weight	0.015 kg
Material	Anodised aluminium
Design	Cover for selector switch with slot
Switch Mounting Size	Suitable for 30.5mm mount switch
Protection Cover Action	Sprung open with hole for locking closed

EUK-704.925.4 - Protection cover

Dimensions

