IE5378

Inductive sensor

IEB3003-BPKG/V4A/3,5M/US RT

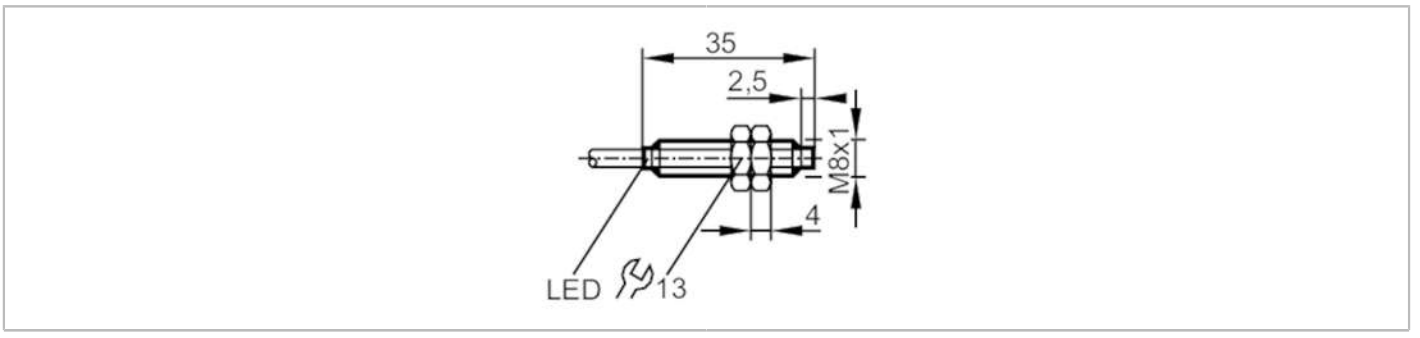

Product characteristics		
Electrical design		PNP
Output function		normally open
Sensing range	[mm]	3
Housing		threaded type
Dimensions	[mm]	M8 x 1 / L = 35
Electrical data		
Operating voltage	[V]	10...36 DC
Current consumption	[mA]	< 15
Protection class		III
Reverse polarity protection		yes
Outputs		
Electrical design		PNP
Output function		normally open
Max. voltage drop switching output DC	[V]	2.5
Permanent current rating of switching output DC	[mA]	200
Switching frequency DC	[Hz]	300
Short-circuit protection		yes
Type of short-circuit protection		pulsed
Overload protection		yes
Detection zone		
Sensing range	[mm]	3
Real sensing range Sr	[mm]	3 ± 10 %
Operating distance	[mm]	0...2.4
Accuracy / deviations		
Correction factor		steel: 1 / stainless steel: 0.7 / brass: 0.5 / aluminium: 0.4 / copper: 0.3
Hysteresis	[% of Sr]	1...15
Switch point drift	[% of Sr]	-10...10
Operating conditions		
Ambient temperature	[°C]	0...70
Protection		IP 67

IE5378

Inductive sensor

IEB3003-BPKG/V4A/3,5M/US RT

Tests / approvals			
EMC		EN 60947-5-2	
		EN 55011	class B
MTTF	[years]	2819	
Mechanical data			
Weight	[g]	108	
Housing		threaded type	
Mounting		non-flush mountable	
Dimensions	[mm]	M8 x 1 / L = 35	
Thread designation		M8 x 1	
Materials		stainless steel; sensing face: PBT	
Displays / operating elements			
Display		switching status	1 x LED, red
Accessories			
Items supplied		lock nuts: 2	
Remarks			
Pack quantity		1 pcs.	
Electrical connection - plug			

Cable: 3.5 m, PVC; 3 x 0.14 mm²

Connector: 1 x M12; coding: A



Connection

