GF762S

Fail-safe inductive sensor

GIFK4003B2PS/SIL2/AM/US

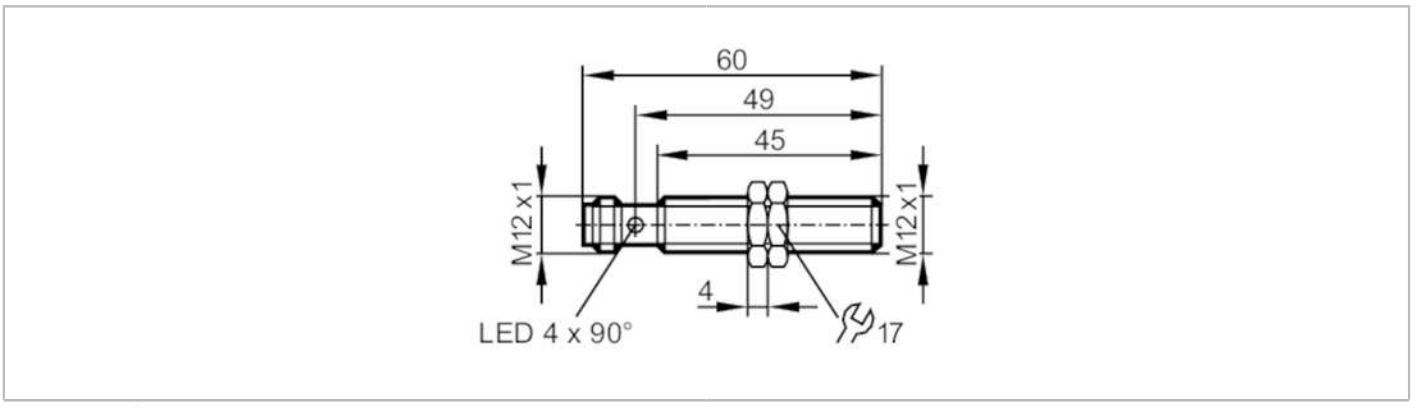

Product characteristics		
Electrical design		PNP
Enable zone	[mm]	0...1.5
Housing		threaded type
Dimensions	[mm]	M12 x 1 / L = 60
Application		
Special feature		Gold-plated contacts; Full-metal housing
Type of operation		permanent operation
Safety-related sub-function		safe state when undamped correctly (s > sAs (sar))
Application		Use in hygienic areas / regular cleaning processes
Electrical data		
Operating voltage	[V]	10...30 DC
Rated insulation voltage	[V]	60
Current consumption	[mA]	< 10; (24 V)
Protection class		III
Reverse polarity protection		yes
Max. power-on delay time	[ms]	500
Outputs		
Electrical design		PNP
Max. voltage drop switching output DC	[V]	2.5
Number of OSSD outputs		2
Max. current load per OSSD output	[mA]	50
Output data		Interface type C class 1
Output voltage at 24 V		compatible with EN 61131-2 inputs type 1, 2
Short-circuit protection		yes
Overload protection		yes
Max. capacitive load CL_max	[nF]	20
Detection zone		
Enable zone	[mm]	0...1.5

GF762S

Fail-safe inductive sensor

GIFK4003B2PS/SIL2/AM/US

Safe switch-off distance sAs (sar)	[mm]	6	
Accuracy / deviations			
Correction factor		steel: 1 / stainless steel: 0.6 / brass: 0.7 / aluminium: 0.6 / copper: 0.3	
Response times			
Response time when approaching the enable zone, turn-on time (ton)	[ms]	20	
Response time to safety request, turn-off time (toff)	[ms]	20	
Risk time / error handling time (toff max)	[ms]	100	
Operating conditions			
Ambient temperature	[°C]	-25...100	
Max. height above sea level	[m]	3000	
Ionising radiation		not permissible	
Protection		IP 65; IP 66; IP 67; IP 68; IP 69K	
Chemical media		the following media were tested for 28 days at 40 °C and with a concentration of 5 %	P3-topax 19
			P3-topax 56
			P3-topax 66
			Topactive OKTO
Tests / approvals			
EMC		industrial environments	
		EN 60947-5-3	
		EN 61000-4-2 ESD	6 kV CD / 8 kV AD
		EN 61000-4-3 HF radiated	20 V/m 80...1000 MHz
		EN 61000-4-3 HF radiated	10 V/m 1,4...2,0 GHz / 3 V/m 2,0...6,0 GHz
		EN 61000-4-4 Burst	2 kV
		EN 61000-4-5 Surge	2 kV
		EN 61000-4-6 HF conducted	10 V
		EN 61000-4-8	30 A/m 50/60 Hz / 1000 A/m 0 Hz
		EN 55011	class B
Shock resistance		EN 60068-2-27 Ea	100 g 11 ms half-sine; 3 shocks each in every direction of the 3 coordinate axes
Continuous shock resistance		EN 60068-2-27 Ea	40 g 6 ms; 4000 shocks each in every direction of the 3 coordinate axes
Fast temperature change		EN 60068-2-14 Nc	TA = 0 °C; TB = 100 °C; t1 = 30 min; t2 = 10 s 50 cycles
Vibration resistance		EN 60068-2-6 Fc	20 g (10...3000 Hz) / 50 sweep cycles, 1 octave per minute, in 3 axes
UL approval		Ta	-25...70 °C
		Enclosure type	Type 1
		power supply	Limited Voltage/Current
		UL approval no.	A064
		File number UL	E174191
Safety classification			
Complies with the requirements		ISO 13849-1 category 2, PL d	
		IEC 61508 SIL 2, HFT 0, SC 2	

GF762S

Fail-safe inductive sensor

GIFK4003B2PS/SIL2/AM/US

Mission time TM	[h]	≤ 87600
Mission time TM (additional indication)		industrial environments Temperature range -25...70 °C ≤ 175200
PFH	[1/h]	< 1,5E-07

Mechanical data

Weight	[g]	33.05
Housing		threaded type
Mounting		flush mountable
Dimensions	[mm]	M12 x 1 / L = 60
Thread designation		M12 x 1
Materials		threaded sleeve: stainless steel (316L/1.4404); sensing face: stainless steel (316L/1.4404); LED window: PEI; LED Sealing: PU; lock nuts: stainless steel (316L/1.4404)
Tightening torque	[Nm]	15
Full-metal housing		yes

Displays / operating elements

Display	Display switching status	4 LED, yellow

Accessories

Items supplied	lock nuts: 2

Remarks

Remarks	can be used in applications up to SIL 2 in accordance with IEC 62061
	Unless stated otherwise, all data refer to the reference target plate to IEC 60947-5-2 over the whole temperature range.
	(FE360 = ST37-2K) 12x12x1 mm
	the correction factors apply to an ambient temperature of 20°C
	do not use a correction factor for the safe switch-off distance sAs/(sar)
Pack quantity	1 pcs.

Electrical connection - plug

Connector: 1 x M12; coding: A; Contacts: gold-plated



GF762S

Fail-safe inductive sensor

GIFK4003B2PS/SIL2/AM/US

Connection

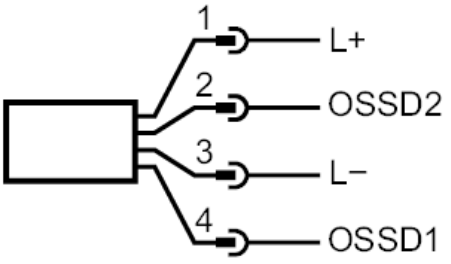

1	L+
2	OSSD2
3	L-
4	OSSD1