Vocal Element Guidance Notes

Speech Recording

Illustrations are dependent on PC setup and may vary on your machine.

Connect the microphone to the computer's microphone socket – Select the volume settings by right-clicking on the speaker symbol in the info section of the task bar (1) and then clicking "Open Volume Control"

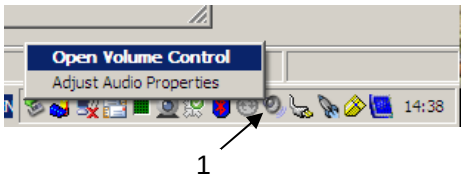

1

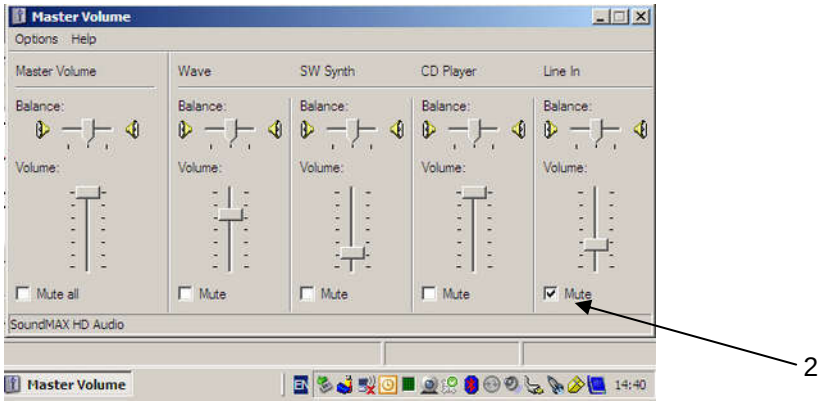

2

On the "Microphone" controller (Line In), remove the Mute checkmark (2).

For recording purposes the free software "*Audacity*" is provided on the element's memory card – Install the software and initiate the programme

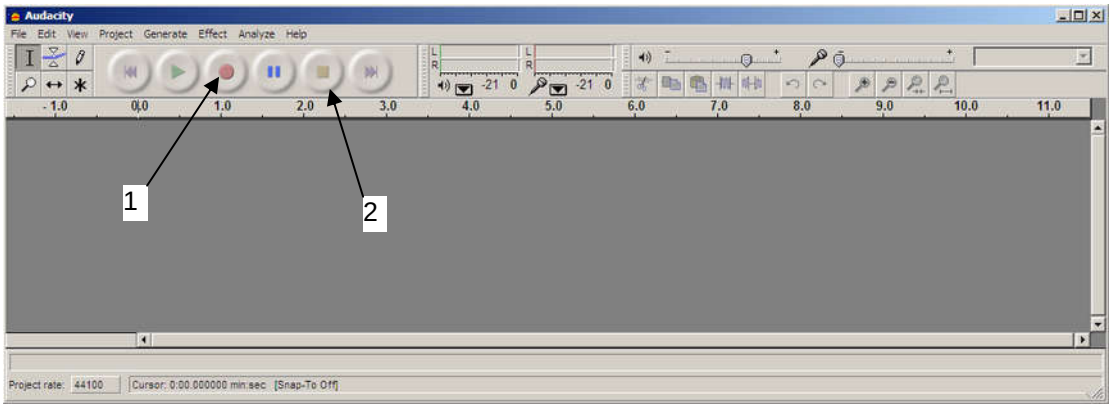

Clicking the record button (1) immediately starts the recording. Stop the recording by clicking the stop button (2)

Exporting to .mp3 format (using LAME MP3 encoder)
The standard installation of Audacity cannot export to mp3 format (despite having the function listed in the File menu) It requires the installation of the LAME MP3 encoder on your PC.
For directions on how to do this go to:
http://audacity.sourceforge.net/help/faq?i=lame-mp3&s=install

Once installed on your PC, simply export your audio file using File, Export As MP3 . . .

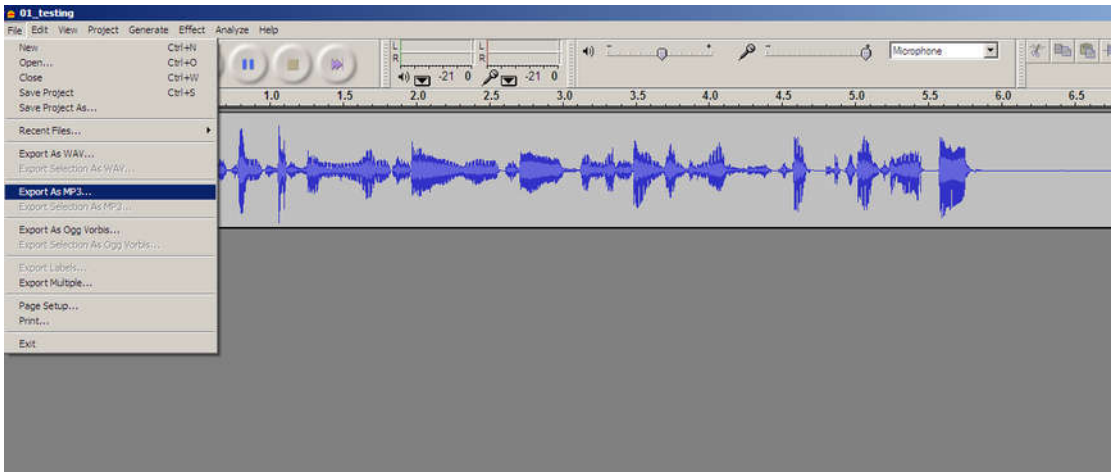

Choose the location to store your mp3 audio file.

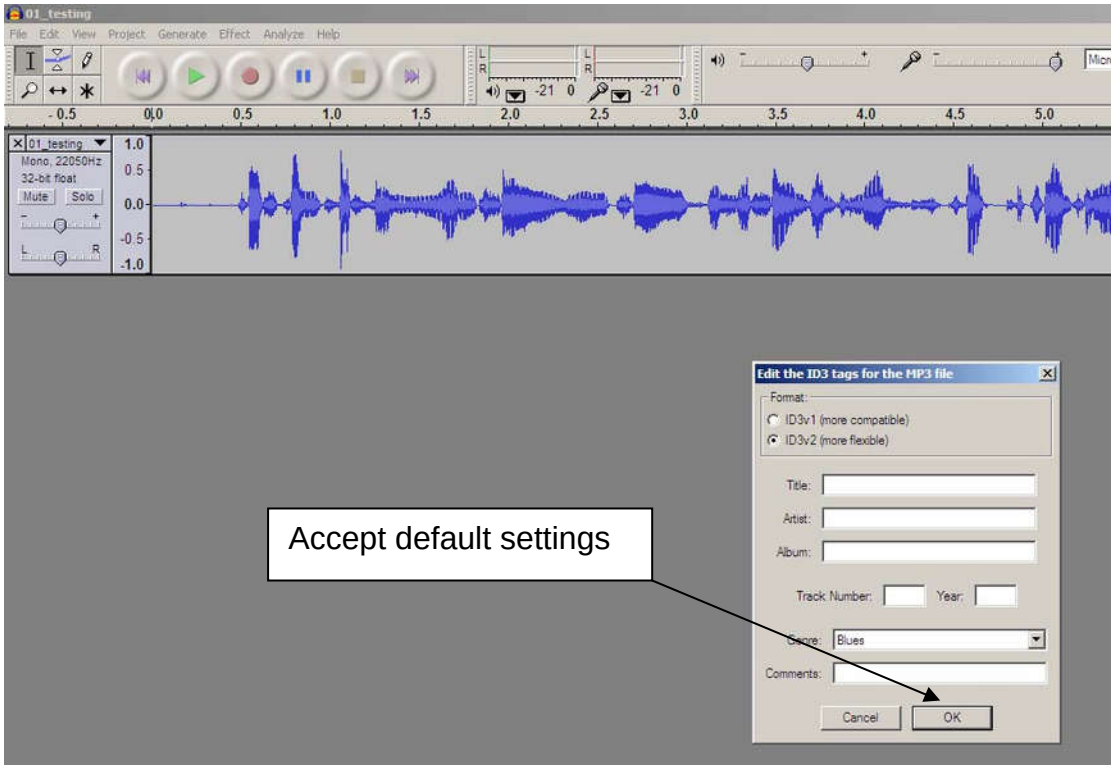

If you do not have the LAME encoder, follow the procedure detailed on the next page

Saving the file and converting it to mp3 format (without LAME encoder)
Under "File" - "export as WAV...".

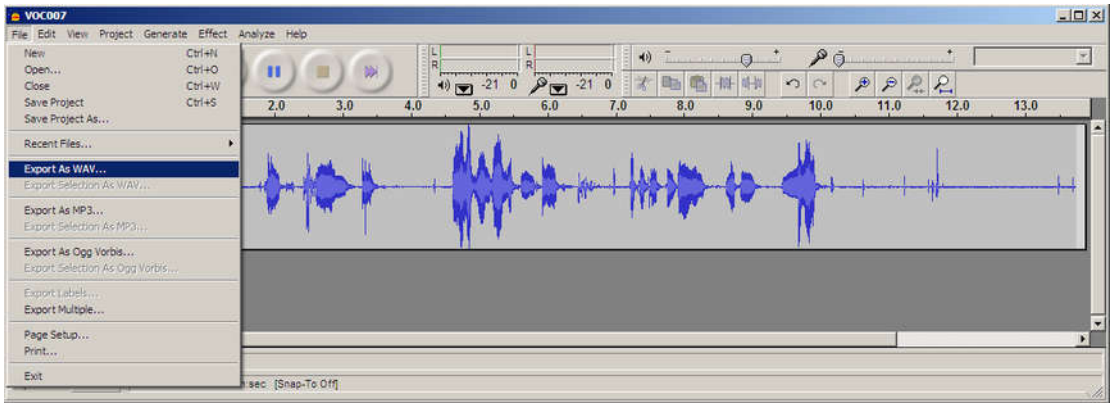

Without the LAME encoder IT IS NOT POSSIBLE TO EXPORT THE FILE DIRECTLY IN MP3 FORMAT, even though "*Audacity*" offers you this option in the menu. Give the file a name and save the WAV file to the Desktop (standard setting).
For conversion purposes, the free software "*FreeRIP*" is provided on the element's memory card. Install the software and initiate the "*FreeRIP*" program

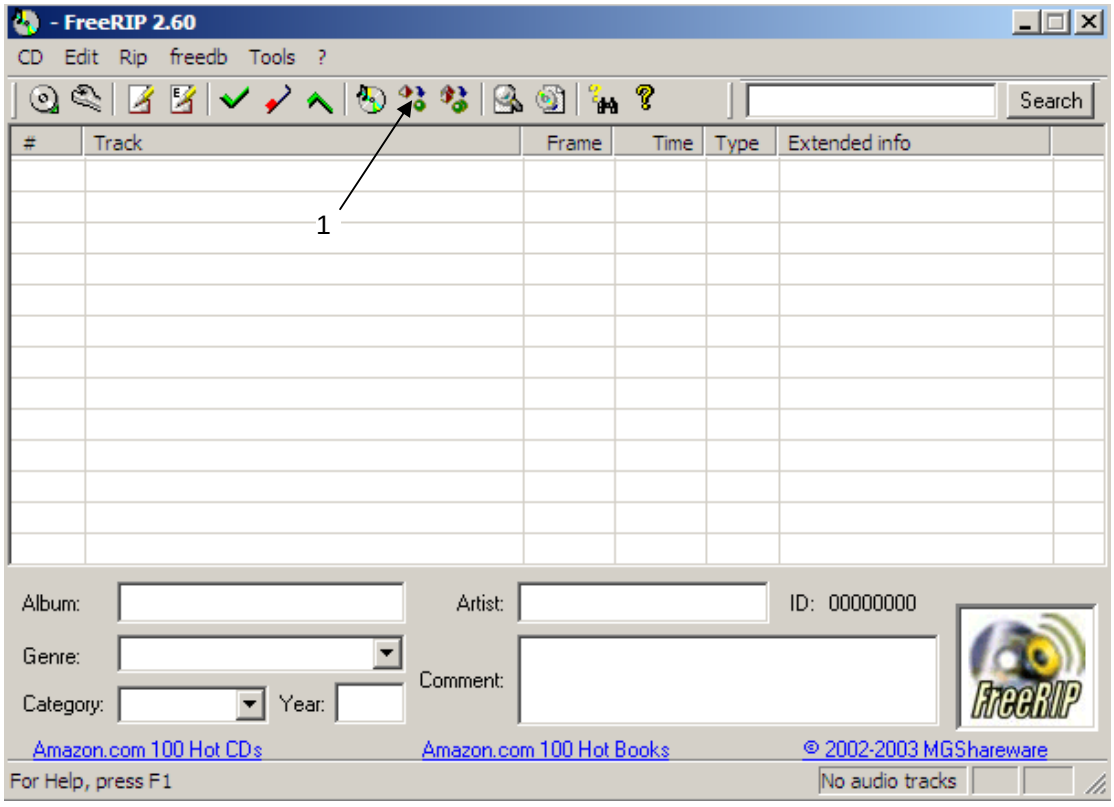

Select "Convert Single wav/mp3/ogg file" (1)

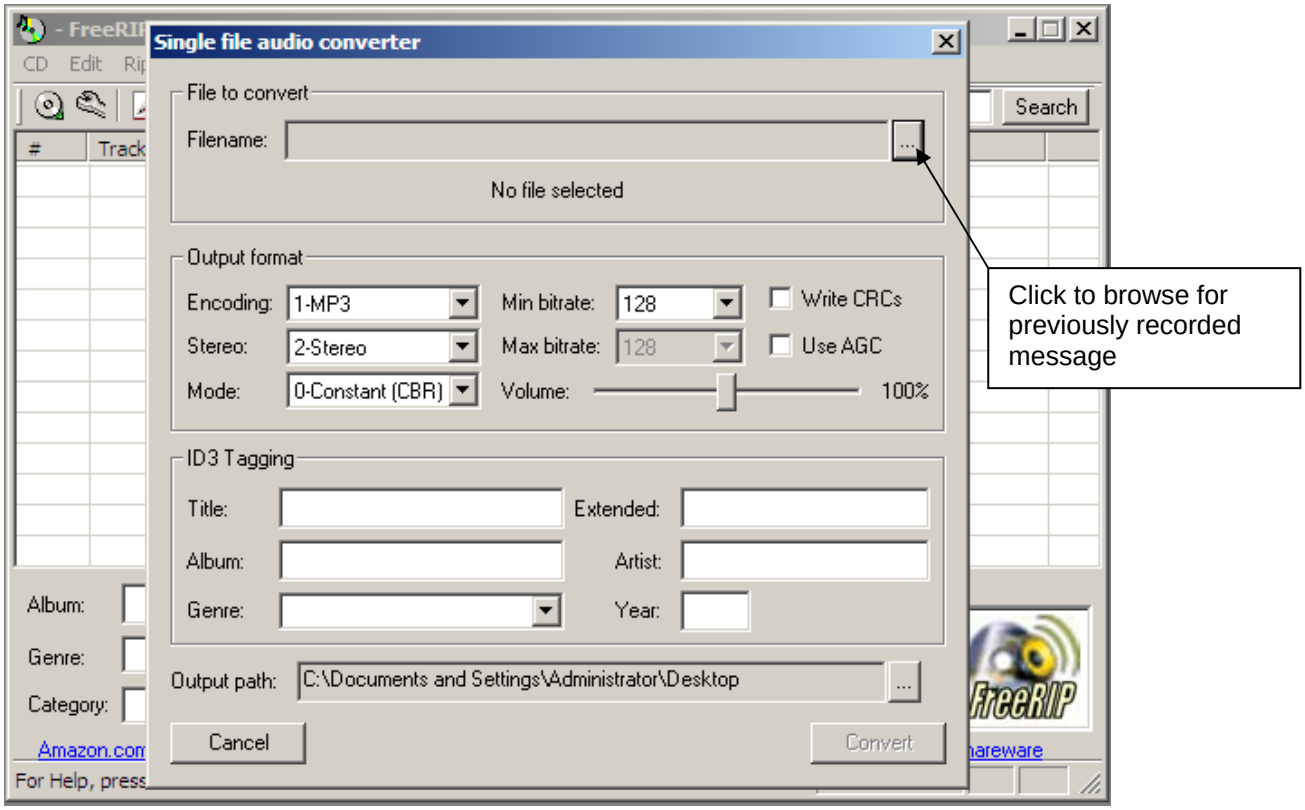

Select the file to be converted (message previously recorded)
Click "Convert" at the bottom right hand corner of the window. The "Output Format" is already set.
Set the "Output Path" to Desktop (preset)
After successful conversion close the dialogue box by clicking on the button "Dismiss"

Uploading files to the Vocal Element

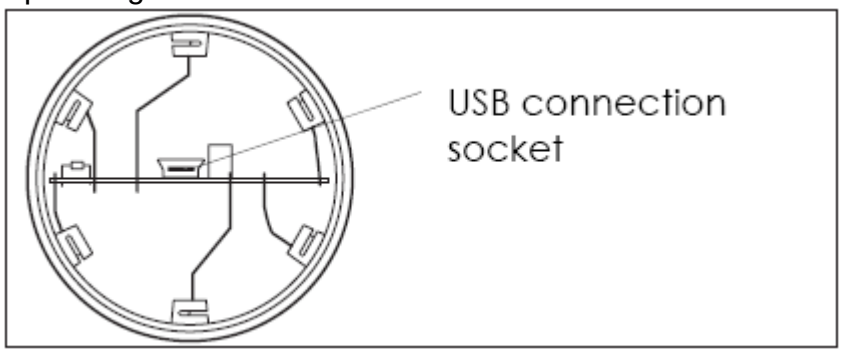

Connect the Vocal Element to one of the PC's USB sockets using the USB cable provided. The element appears as a removable medium in Windows Explorer.

Special instructions

1. The element is supplied with 15 voice sequences (Numbers "1"..."15") for test and orientation purposes as well as a folder named Software which contains "*Audacity*" & "*FreeRIP*".
Ensure that the Software folder is removed from the Vocal Element before you download new messages to it.
We advise that you copy the contents of the vocal element to a folder on your PC before you start.

2. The element is already formatted. If reformatting is carried out, this must be conducted using FAT (File Allocation Table) (not FAT32).

3. If a number of sequences are to be used, sort them in Windows Explorer first, mark all the sequences and then pull them (on the first sequence) via drag and drop onto the element's memory card. While the data is being transferred a red LED on the element's circuit board flashes.

4. To ensure that all files have been copied correctly, remove the vocal element using the relevant button (1) in the toolbar.



5. If you wish to load pre-recorded files (music, tones etc.) it is advisable to start with them in .wav format and convert them to mp3 format using "*FreeRIP*" as described above. Observe any copyright/broadcast restrictions which may exist on these files.

Playback

The vocal element requires 6 terminals to play all 15 sequences (0V, +24V and 4 signal/address lines). You may use the element in conjunction with light elements with a reduced number of possible sequences.

No of light elements	Number of sequences
0	15
1	7
2	3
3	1

A special version of the vocal element is available which permits 4 light elements to be used and will play 1 sequence – please contact us for details.

Operation of the vocal element is a simple matter of applying the voltages to the terminals for the required sequence as shown below. A sequence will repeat continuously until the voltage is removed or another sequence is selected.

Connection – vocal element only

NC = No Connection

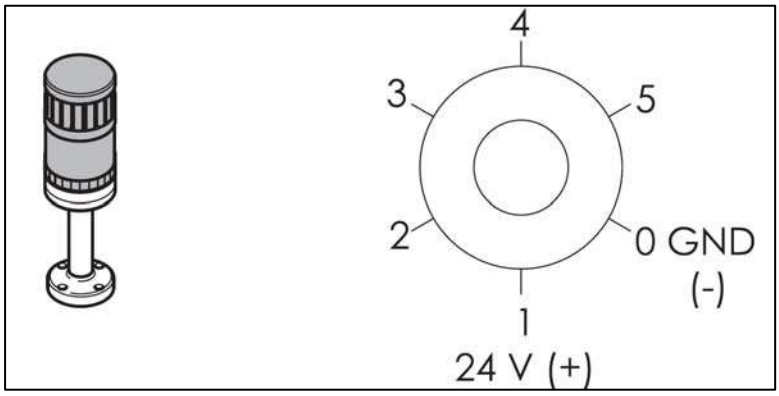

Sequence	1	2	3	4	5
1	+24V	+24V	NC	NC	NC
2		NC	+24V	NC	NC
3		+24V	+24V	NC	NC
4		NC	NC	+24V	NC
5		+24V	NC	+24V	NC
6		NC	+24V	+24V	NC
7		+24V	+24V	+24V	NC
8		NC	NC	NC	+24V
9		+24V	NC	NC	+24V
10		NC	+24V	NC	+24V
11		+24V	+24V	NC	+24V
12		NC	NC	+24V	+24V
13		+24V	NC	+24V	+24V
14		NC	+24V	+24V	+24V
15		+24V	+24V	+24V	+24V

Connection – vocal element with 1 light element
Vocal element operation is independent of light element.

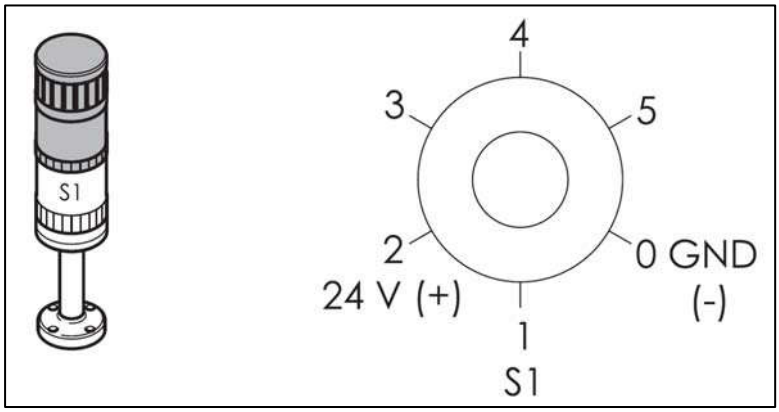

Sequence	1	2	3	4	5
1	S1	+24V	+24V	NC	NC
2			NC	+24V	NC
3			+24V	+24V	NC
4			NC	NC	+24V
5			+24V	NC	+24V
6			NC	+24V	+24V
7			+24V	+24V	+24V

Connection – vocal element with 2 light elements
Vocal element operation is independent of light elements.

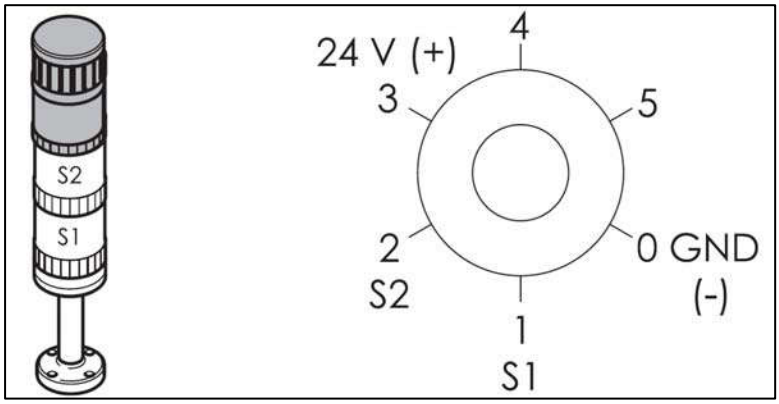

Sequence	1	2	3	4	5
1	S1	S2	+24V	+24V	NC
2				NC	+24V
3				+24V	+24V

Application example:
Wiring together terminals 1 & 4 will trigger sequence 1 when S1 goes on. Similarly, connecting terminals 2 & 5 will generate sequence 2 when S2 goes on and sequence 3 when both S1 & S2 are on simultaneously. Terminal 3 can be used to inhibit or silence the vocal element.

Connection – vocal element with 3 light elements
Vocal element operation is independent of light elements.

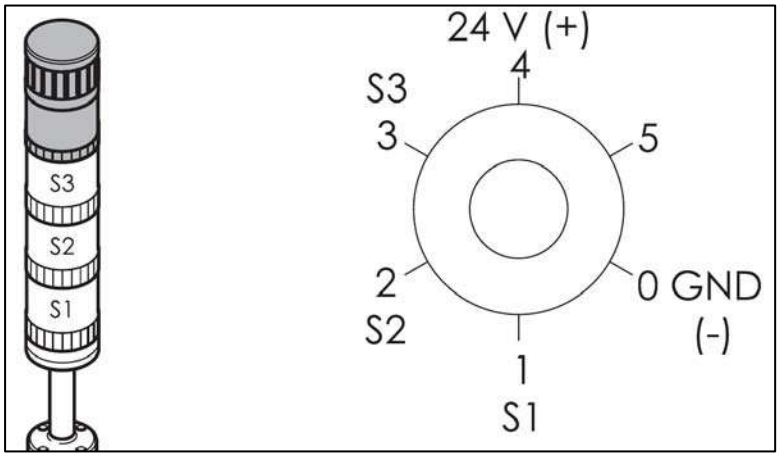

Sequence	1	2	3	4	5
1	S1	S2	S3	+24V	+24V

Troubleshooting

If audio files fail to play, check that they are of the correct format (.mp3). If you have not installed the LAME encoder, check that you used Freerip to convert the WAV file to mp3.

Windows 7 users

If the audio files don't play, disconnect the vocal element and reconnect it to the PC. Check that the files can be played via the PC and then Remove Safely.

