E74300

AS-Interface flat cable

Flat cable 100 m Process ye

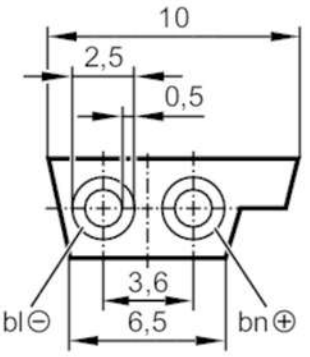

Application		
Design		for use of insulation displacement technology
Application		food industry
Electrical data		
Operating voltage	[V]	26.5...31.6 DC; (Peak voltage 300 V)
Operating conditions		
Ambient temperature	[°C]	-40...105
Mechanical data		
Weight	[g]	6745
Remarks		
Remarks		100 m form supplied: coiled
Pack quantity		100 m
Electrical connection		
Cable: 100 m, TPE-PVC compound, yellow; 2 x 1.5 mm²		