Remote potentiometer
AD 3

0277822



- Installation kit with rotary knob
- Degree of protection front side: IP 40
- Drill diameter 22.5 mm

Technical Data

General Data

Mounting hole:	22.5 mm
Temperature range:	- 20 ... + 60 °C
Degree of protection front side:	IP 40
Mounting:	threaded ring
Weight:	approx. 20 g

Standard Type

AD 3 10 kΩ Z1, Z2

Article number:	0028962
• Resistance:	10 kΩ
• Diameter:	22.5 mm

Application

The external potentiometer is used for remote setting of DOLD timer relays. The internal potentiometer of the timer must be set to min. time delay.

Electrical Connection

Connect the AD3 remote potentiometer at the terminals Z1/Z2 or at the terminals Z1/Z2/Z3. The bridge cicuit between these terminals must be removed.

Use a shielded cable, connect one side of the potentiometer at earth (PE) and/or grounded housing.

The max. distance to the timer is 20 m. Don´t lay cable connections together with high-voltage or high-frequency power lines.

Dimensions

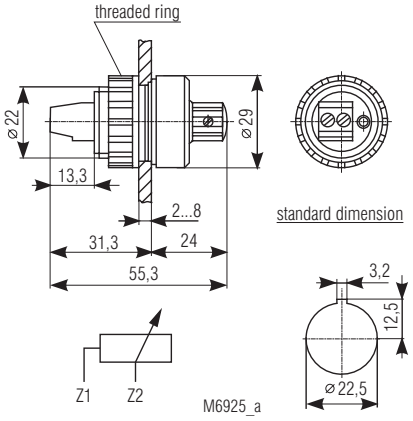

Remote potentiometer with terminals Z1, Z2

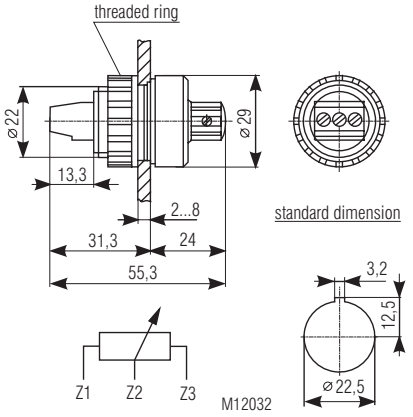

Remote potentiometer with terminals Z1, Z2, Z3

Overview

Resistance	∅ [mm]	Terminals	Article-No.
4.7 kΩ	22.5	Z1, Z2	0008179
10 kΩ	22.5	Z1, Z2	0028962
22 kΩ	22.5	Z1, Z2	0029928
47 kΩ	22.5	Z1, Z2	0016926
100 kΩ	22.5	Z1, Z2	0007687
470 kΩ	22.5	Z1, Z2	0029850
1 MΩ	22.5	Z1, Z2	0004082
2.2 MΩ	22.5	Z1, Z2	0006154
4.7 MΩ	22.5	Z1, Z2	0003706
10 MΩ	22.5	Z1, Z2	0004084
20 MΩ	22.5	Z1, Z2	0004085

Resistance	∅ [mm]	Terminals	Article-No.
4.7 kΩ	22.5	Z1, Z2, Z3	0021691
10 kΩ	22.5	Z1, Z2, Z3	0055294
470 kΩ	22.5	Z1, Z2, Z3	0050174
10 MΩ	22.5	Z1, Z2, Z3	0061507

All technical data in this list relate to the state at the moment of edition. We reserve the right for technical improvements and changes at any time.