DN4013

Switched-mode power supply 24 V DC

PSU-1AC/24VDC-10A

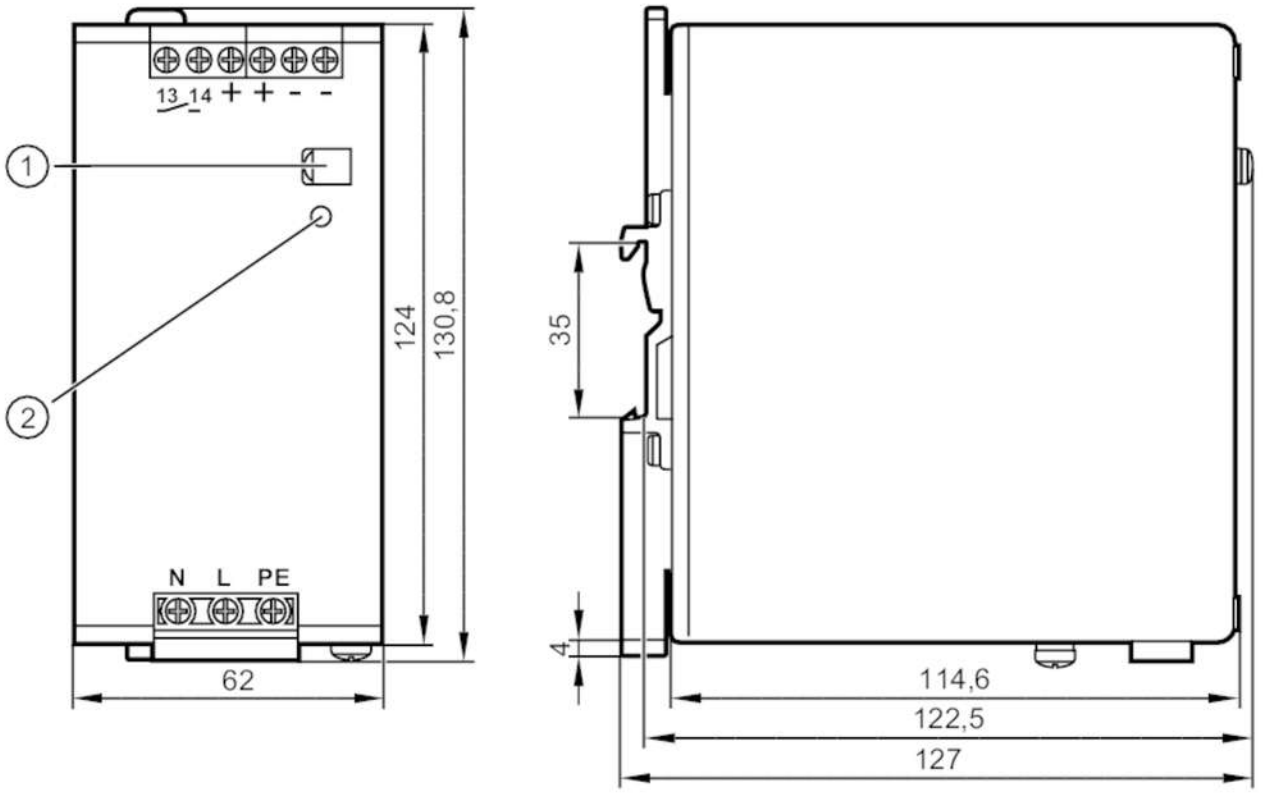

1 potentiometer 24...28 V DC
2 LED DC ok

Electrical data		
Frequency AC	[Hz]	47...64
Operating voltage tolerance	[%]	10
Operating voltage tolerance 2	[%]	10
Operating voltage	[V]	automatic range selection
Nominal voltage AC	[V]	< 230
Nominal frequency AC	[Hz]	50...60
Input voltage range AC	[V]	100...120 / 200...240
Output voltage DC	[V]	24...28
Protection class		I; (IEC 61140)
Overvoltage protection		yes; (< 39 DC)
Output voltage	[V]	adjustable; output voltage to SELV, PELV
Max. output current at min. output voltage	[A]	10
Max. output current at max. output voltage	[A]	8.6
Max. output current peak at min. output voltage	[A]	12
Max. output current peak at max. output voltage	[A]	10.3
Output power (permanent)	[W]	240

DN4013

Switched-mode power supply 24 V DC

PSU-1AC/24VDC-10A

Output power (peak)	[W]	288
Note on output power (peak)	[W]	≤ 45 °C permitted continuously; > 45 °C < 1 minute every 10 minutes
Power factor (nominal voltage 120 V AC / 60 Hz)		0.59
Power factor (nominal voltage 230 V AC / 50 Hz)		0.51
Power reserve	[%]	20
Number of output circuits		1
Max. residual ripple	[mV]	50
Switch-on peak current (nominal voltage 120 V AC / 60 Hz)	[A]	3
Switch-on peak current (nominal voltage 230 V AC / 50 Hz)	[A]	3
Inrush current limitation		yes
Efficiency (nominal voltage 120 V AC / 60 Hz)	[%]	91
Efficiency (nominal voltage 230 V AC / 50 Hz)	[%]	91.6
External input protection		≤ B-10 A / ≤ C-6 A
Derating	[W/K]	6 (60...70 °C)
Mains buffering time (nominal voltage 120 V AC / 60 Hz)	[ms]	46
Mains buffering time (nominal voltage 230 V AC / 50 Hz)	[ms]	47
Input current (nominal voltage 120 V AC / 60 Hz)	[A]	3.73
Input current (nominal voltage 230 V AC / 50 Hz)	[A]	2.23
Power loss (nominal voltage 120 V AC / 60 Hz)	[W]	23.7
Power loss (nominal voltage 230 V AC / 50 Hz)	[W]	22
Back feeding protection	[V]	35
Outputs		
Short-circuit proof		yes
Overload protection		yes
Overload performance		output current constant
Type DC-OK signal		relay output
Reliability of the DC OK signal		60 V DC (0.3 A) / 30 V DC (1 A) / 30 V AC (0.5 A)
Operating conditions		
Ambient temperature	[°C]	-25...70
Note on ambient temperature		observe the free space for convection (see operating instructions)
Storage temperature	[°C]	-40...85
Max. relative air humidity	[%]	95; (IEC 60068-2-30)
Protection		IP 20; (EN 60529)
Pollution degree		2; (IEC 62103: conductive soiling not permitted)
Overheat protection		yes

DN4013

Switched-mode power supply 24 V DC

PSU-1AC/24VDC-10A

Tests / approvals			
EMC		EN 61000-6-1	
		EN 61000-6-2	
		EN 61000-6-4	
Vibration resistance		IEC 60068-2-6	±1,6 mm 2...17,8 Hz / 2 g 17,8...500 Hz
Shock resistance		IEC 60068-2-27	30 g 6 ms / 20 g 11 ms
Mechanical data			
Weight	[g]	875.5	
Type of mounting		rail; (TH35 (EN 60715))	
Dimensions	[mm]	124 x 62 x 122.5	
Materials		steel sheet	
Displays / operating elements			
Display		DC ok	1 x LED
Remarks			
Remarks		Series connection of outputs only applies to identical units up to max. 150 V DC overall voltage	
Pack quantity		1 pcs.	

Electrical connection

screw terminals:

Connection

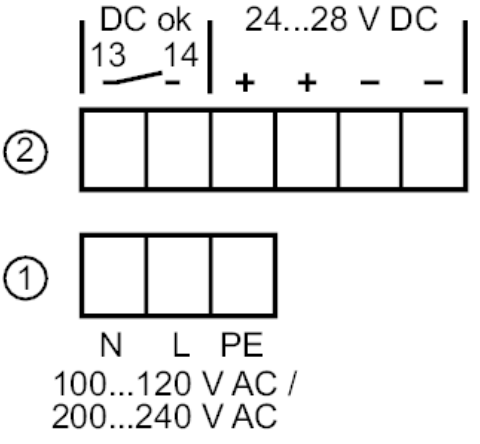

1: primary
2: secondary

Diagrams and graphs

block diagram

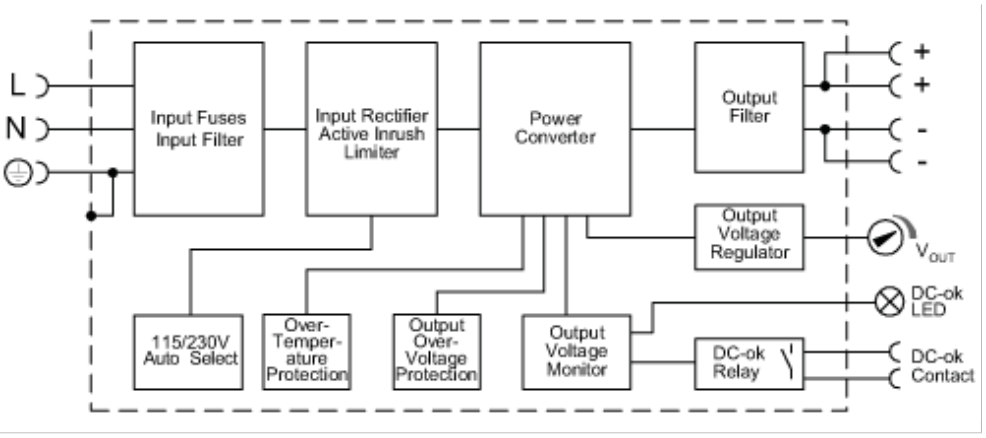

DN4013

Switched-mode power supply 24 V DC

PSU-1AC/24VDC-10A

output characteristics

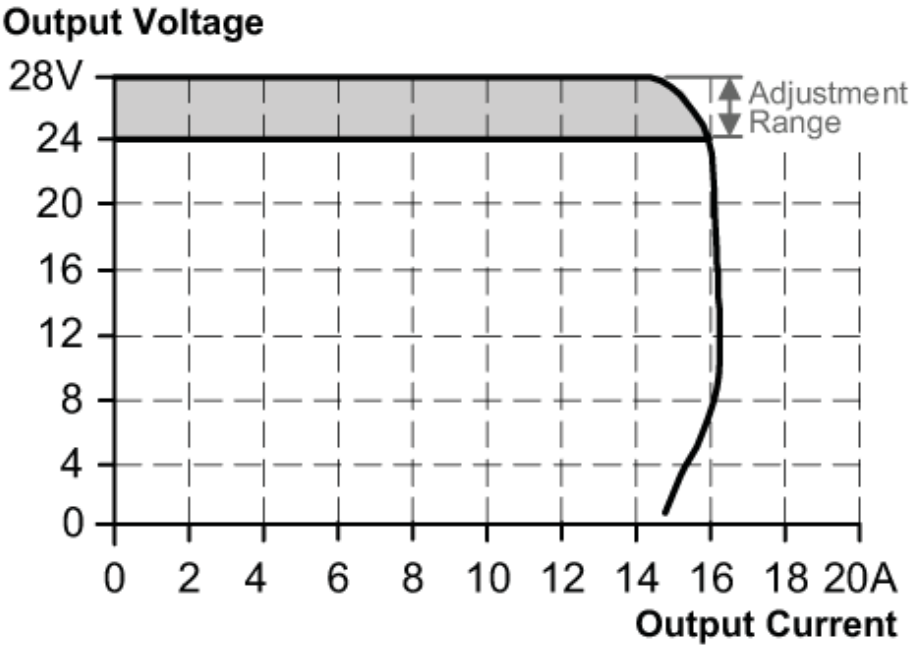

characteristic curve for degree of efficiency / power loss

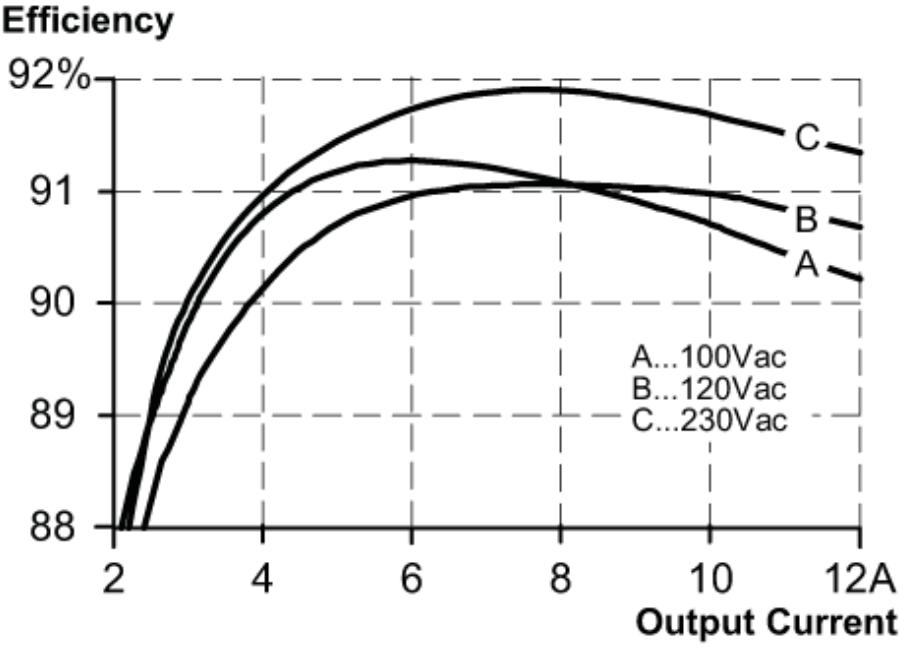

DN4013

Switched-mode power supply 24 V DC

PSU-1AC/24VDC-10A

characteristic line for derating

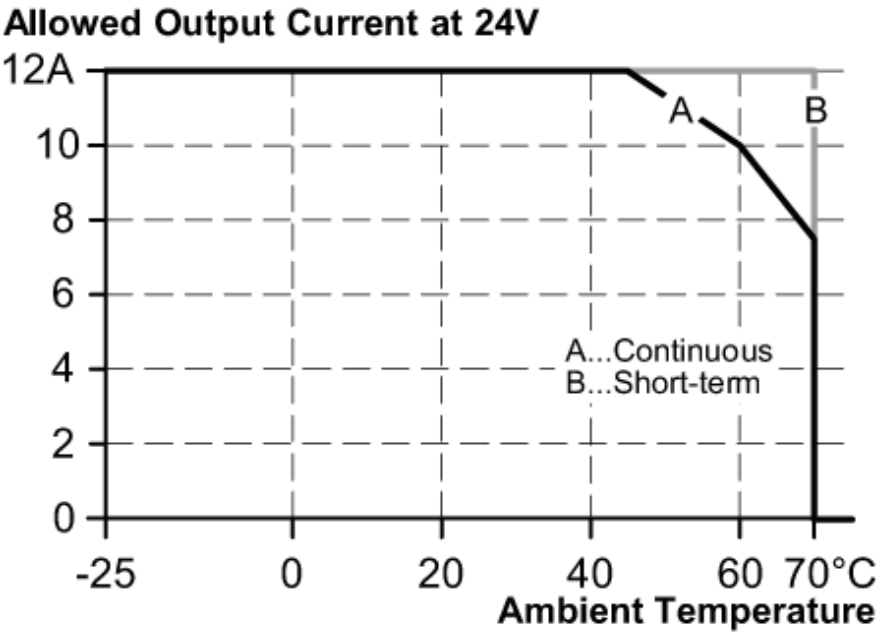

characteristic line for mains buffering time

