Magnetostrictive Sensors

BTL7-E501-M0100-P-S32
Order Code: BTL1H23

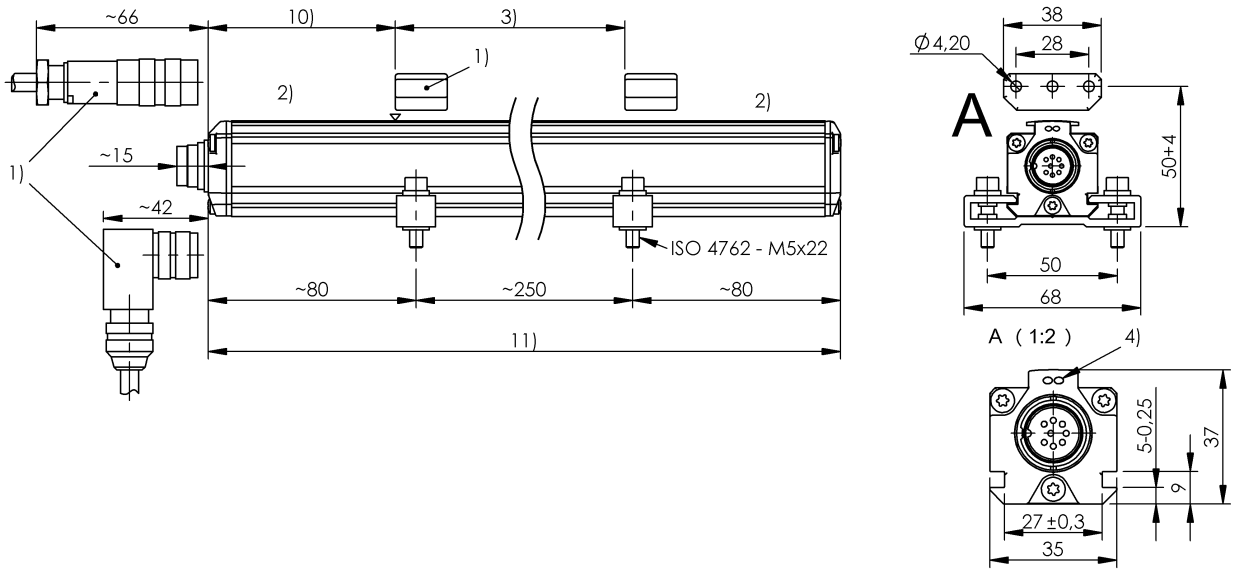

1) not included in scope of delivery, 2) Non-usable area, 3) Nominal length = Measuring length, 4) LED function indicator, 10) Null point, 11) Installation length

Basic features

Approval/Conformity	CE cULus EAC WEEE
Magnets, number (factory setting)	1
Magnets, number max.	2

Electrical connection

Connection	Connector, M16x0.75, 8-pin
Connection version	axial
Polarity reversal protected	Ub up to 36 V
Short-circuit protection	to GND and to 36 V DC

Electrical data

Current consumption max. at 24 V DC	180 mA
Error signal Ia falling	3.6 mA
Error signal Ia rising	3.6 mA
Galvanic isolation	no
Inrush current	≤ 500 mA/10 ms
Operating voltage Ub	10...30 VDC
Output signal adjustable	with software tool
Overvoltage protection	Ub up to 36 V
Switch-on delay max.	600 ms
Voltage-proof up to (GND to housing)	500 V AC

Environmental conditions

Ambient temperature	-40...85 °C
EN 55016-2-3, Radiation	For industrial and residential use
EN 60068-2-27, Continuous shock	150 g, 2 ms
EN 60068-2-27, Shock	150 g, 6 ms
EN 60068-2-6, Vibration	20 g, 10…2000 Hz
EN 61000-4-2, ESD	Severity Level 3
EN 61000-4-3, RFI	Severity Level 3
EN 61000-4-4, Burst	Severity Level 3
EN 61000-4-5, Surge	Severity Level 2
EN 61000-4-6, High-frequency fields	Severity Level 3
EN 61000-4-8 Magnetic fields	Severity Level 4
IP rating	IP67, with connector
Relative Luftfeuchtigkeit	≤ 90 %, non-condensing
Storage temperature	-40...100 °C
Temperature coefficient typ.	≤ 30 ppm/K at 50% of nominal stroke 500mm

Functional safety

MTTF (40 °C)	49 a

Material

Cover material	Aluminum, Die-cast, nickel plated
Housing material	Aluminum, Anodized
Housing material, surface protection	Anodized

Magnetostrictive Sensors

BTL7-E501-M0100-P-S32
Order Code: BTL1H23

Mechanical data

Minimum distance of the magnets	65 mm
Mounting part	Mounting clamps
Null point	72.0 mm
Overall Length	245 mm

Range/Distance

Measuring length	100 mm
Non-linearity max.	±50 µm
Repeat accuracy	± 5 µm
Sampling frequency max.	4000 Hz

Output/Interface

Analog output	Analog, current 4…20 mA Analog, current 20…4 mA

Connector Drawings

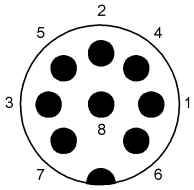

Wiring Diagrams

Pin	
1	4...20 mA
2	0V
3	20...4 mA
4	La
5	NC
6	GND
7	+24 V DC
8	Lb