Rod clevis AP2, Series CM2

3590505000

AVENTICS Rod clevises

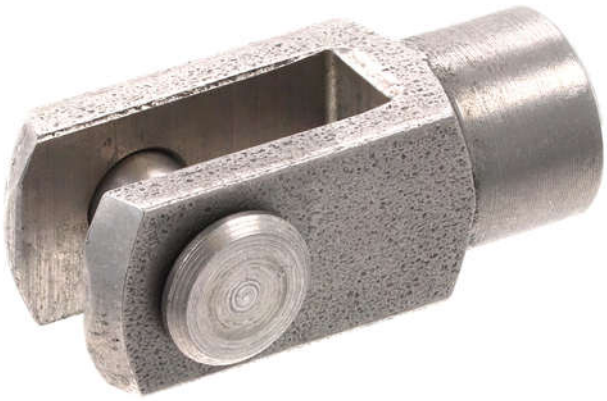

Technical data

Industry	Industrial
For series	with circlip to mount on cylinder CCL-IS/IC, CCI, SSI, CSL-RD, ICM, ICS-D2, 167
For series	CCL-IS ICS-D2 167
Thread size	M16x1,5
Weight	0.4 kg

Material

Housing material	Stainless Steel
Part No.	3590505000

Rod clevis AP2, Series CM2

3590505000

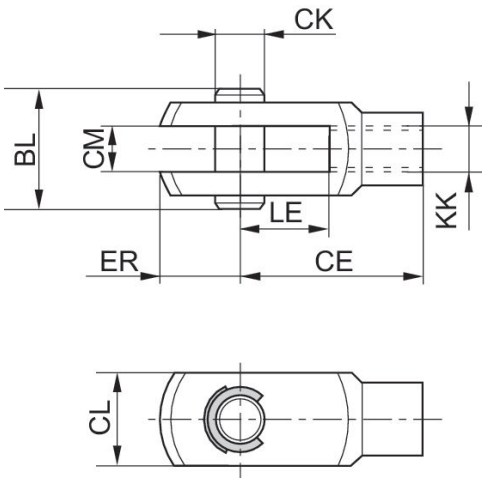

KK	Part No.	CE	CK e8	CL	CM B12	ER	BL	LE
M4	3330510000	16	4	10	5	6	15	8
M6	3330516000	24	6	12	6	7	17	12
M8	3330520000	32	8	16	8	10	22	16
M10x1,25	3590502000	40	10	20	10	12	26	20
M12x1,25	3590504000	48	12	24	12	14	31	24
M16x1,5	3590505000	64	16	32	16	19	39	32
M20x1,5	3590508000	80	20	40	20	20	49	40