MK5251

T-slot cylinder sensor

MKT3028BBPKG/G/0,3M/-H/US/2X

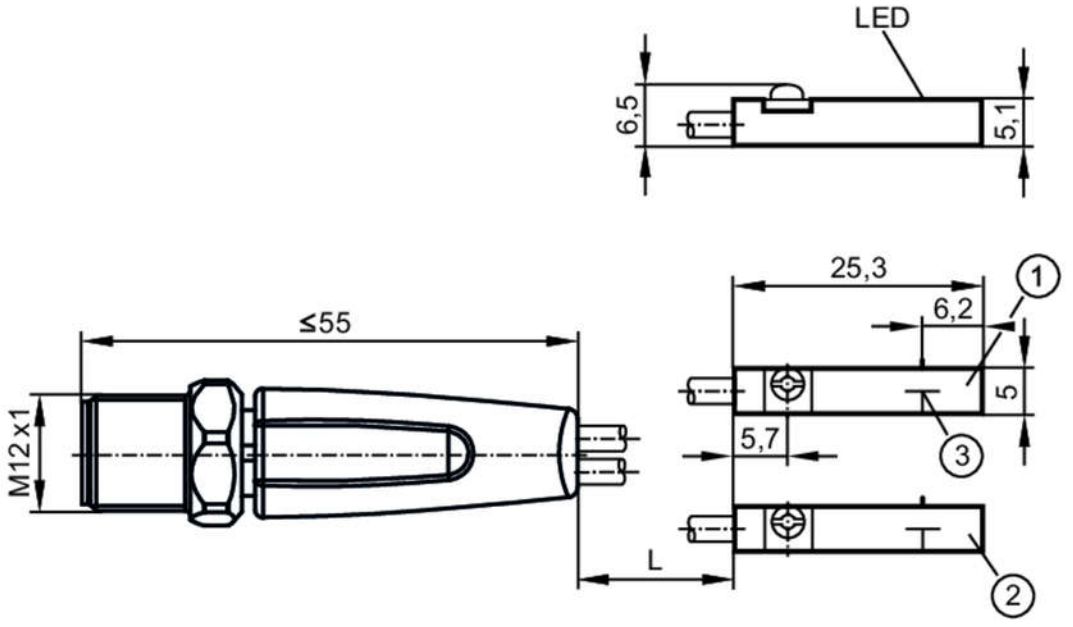

1 sensor 1
2 sensor 2
3 Sensing face

Product characteristics		
Electrical design		PNP
Output function		2 x normally open
Dimensions	[mm]	25 x 5 x 6.5
Electrical data		
Operating voltage	[V]	10...30 DC; ("supply class 2" to cULus)
Current consumption	[mA]	< 10
Protection class		III
Reverse polarity protection		yes
Max. power-on delay time	[ms]	30
Outputs		
Electrical design		PNP
Output function		2 x normally open
Max. voltage drop switching output DC	[V]	2.5
Permanent current rating of switching output DC	[mA]	100; (per sensor)
Switching frequency DC	[Hz]	6000
Short-circuit protection		yes
Overload protection		yes
Detection zone		
Response sensitivity	[mT]	2.8
Travel speed	[m/s]	< 10

MK5251

T-slot cylinder sensor

MKT3028BBPKG/G/0,3M/-H/US/2X

Accuracy / deviations			
Hysteresis	[mm]	1.5	
Repeatability	[mm]	< 0.2	
Operating conditions			
Ambient temperature	[°C]	-25...85	
Protection		IP 65; IP 67; IP 69K	
Tests / approvals			
EMC		EN 61000-4-2 ESD	- CD / 8 kV AD
		EN 61000-4-3 HF radiated	10 V/m
		EN 61000-4-4 Burst	2 kV
		EN 61000-4-6 HF conducted	10 V
		EN 55011	class B
MTTF	[years]	3523	
UL approval		Ta	-25...75 °C
		Enclosure type	Type 1
		power supply	Limited Voltage/Current (Marking Class 2)
		File number UL	E174191
Mechanical data			
Weight	[g]	28.2	
Mounting		flush mountable	
Type of mounting		fastening clamp with combined slot / hexagon socket, width across flats 1.5	
Cylinder type		T-slot cylinders	
Dimensions	[mm]	25 x 5 x 6.5	
Materials		housing: PA; fastening clamp: stainless steel	
Displays / operating elements			
Display		switching status	1 x LED, yellow
Accessories			
Items supplied		rubber placeholder: 2	
		Cable clip: 2	
Remarks			
Pack quantity		1 pcs.	

Electrical connection - Cable 1

Cable: 0.3 m, PVC

Electrical connection - Cable 2

Cable: 0.3 m, PVC

Electrical connection - plug

Connector: 1 x M12; coding: A; Locking: Hexagon nut, rotatable, stainless steel



MK5251

T-slot cylinder sensor

MKT3028BBPKG/G/0,3M/-H/US/2X

Connection

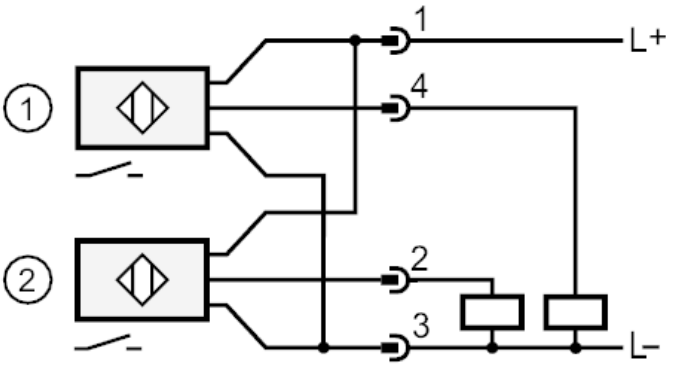

1	sensor 1
2	sensor 2