# E2D118

## Mounting set for photoelectric distance sensors

MOUNTING SET OPD 12MM

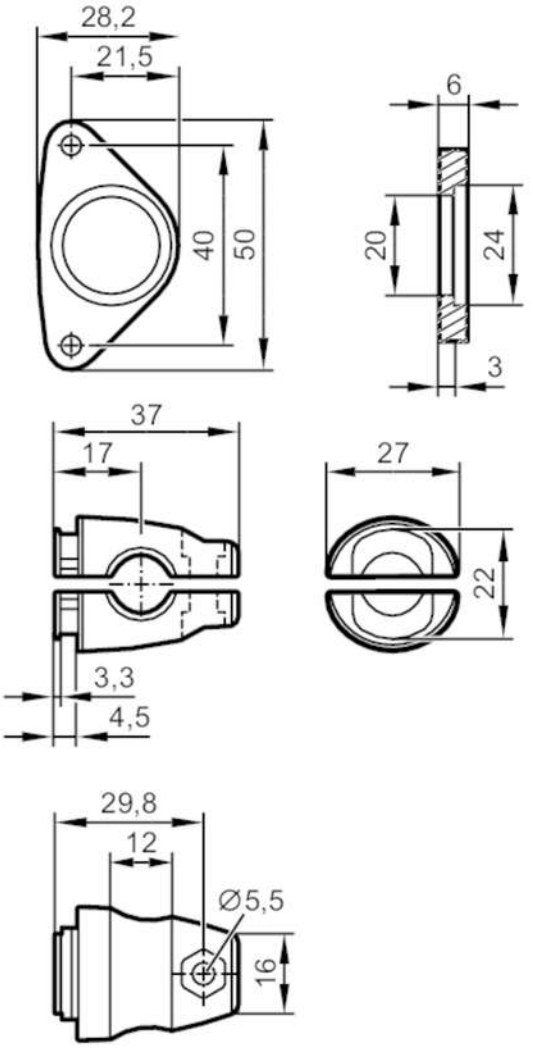


| | | |
|---|---|---|
| **Application** | | |
| Design | | clamp mounting |
| **Mechanical data** | | |
| Weight | [g] | 121 |
| Type of mounting | | Mounting rod; (Ø 12 mm) |
| Materials | | fixture: stainless steel (1.4305 / 303); Clamp: stainless steel (1.4408); screws: stainless steel; nut: stainless steel |
| **Accessories** | | |
| Items supplied | | socket head screws: 2 x M4 x 30 |
| **Remarks** | | |
| Pack quantity | | 1 pcs. |

# E2D118

## Mounting set for photoelectric distance sensors

MOUNTING SET OPD 12MM

## Diagrams and graphs

