PTS636 Series
6.0 x 3.5 Top Actuated

Features/Benefits

- *6.0 x 3.5 mm footprint*
- *Multiple heights*
- *THT or SMT type*

Typical Applications

- *IoT devices*
- *Home automation*
- *Remote controls*



Specification

FUNCTION: Momentary action
CONTACT ARRANGEMENT: 1 make contact = SPST, N.O.
TERMINALS: THT, J, G and F type for SMT

Electrical

MAXIMUM VOLTAGE: 12 VDC
MAXIMUM CURRENT DC: 50 mA
DIELECTRIC STRENGTH: 250 VA C (1mn)
CONTACT RESISTANCE: ≤ 100 m Ω
INSULATION RESISTANCE: ≥ 100 M Ω
BOUNCE TIME: ≤ 10 ms

Environmental

OPERATING TEMPERATURE: -40˚C to 90˚C

Life Cycles

Height (mm)	Force	Operating Life
2.5mm	180gf ± 30gf	70,000
	250gf ± 50gf	100,000
4.3mm & 5.0mm	130gf ± 50gf	50,000
	180gf ± 50gf	50,000
	250gf ± 50gf	30,000
	320gf ± 50gf	20,000

Process

SOLDERING: This component is suited to the following methods:
– Infrared Reflow Soldering in accordance with IEC61760-1

Packaging

In bags of 1,000 pcs for THT
In reels of 3,000 pieces for 2.5 mm height
In reels of 1.500 pieces for 4.3 and 5.0 mm height
Dimensions of reels according to EIA 481B
External diameter 330 mm

NOTE:

- Specifications listed above are for switches with standard options. For information on specific and custom switches, consult Customer Service Center.
- The PTS series is not certified for using in Automotive application and no PPAP. However, in the case of some automotive accessories and specific applications for 2 and 3 wheeled vehicles the PTS is widely used and very suitable. Please contact your local C&K representative to discuss your application and the best switch solution.

How To Order

Our easy build-a-switch concept allows you to mix and match options to create the switch you need. To order, select desired option from each category and and place it in the appropriate box.

P T S 6 3 6 [S] [ ] [ ] [ ][ ] [ ] [ ][ ][ ][ ] L F S

Termination
S Straight

Actuation Force
L 130 gf
M 180 gf
K 250 gf
P 320 gf

Ground Pin
NONE Without ground pin
G With ground pin

Height
43 4.3mm thru-hole & SMT
50 5.0mm thru-hole & SMT
25 2.5mm SMT only

Terminal Shape
NONE Gull wing
J J lead
F Flat lead * 2.5mm without ground pin version only

Insertion Type
NONE Thru-hole
SMTR Surface mount, T&R

RoHS compliant, silver plated

THT versions (4.3 & 5.0 mm height)

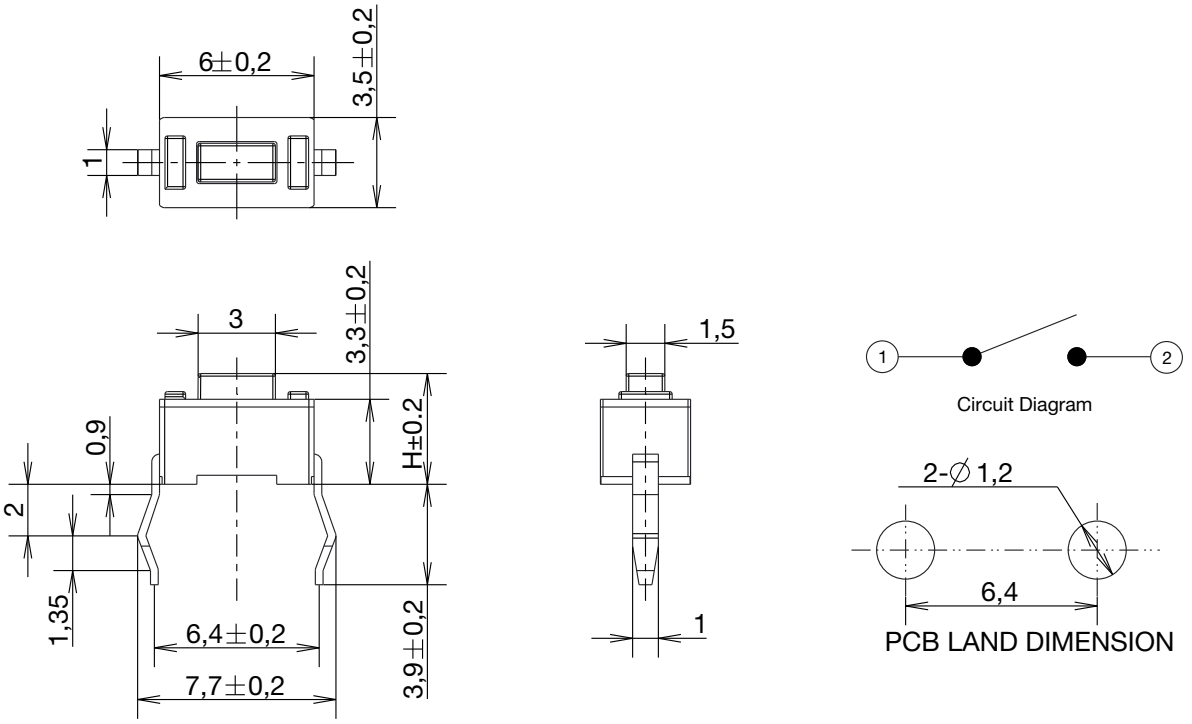

SMT G leads (4.3 & 5.0 mm height)

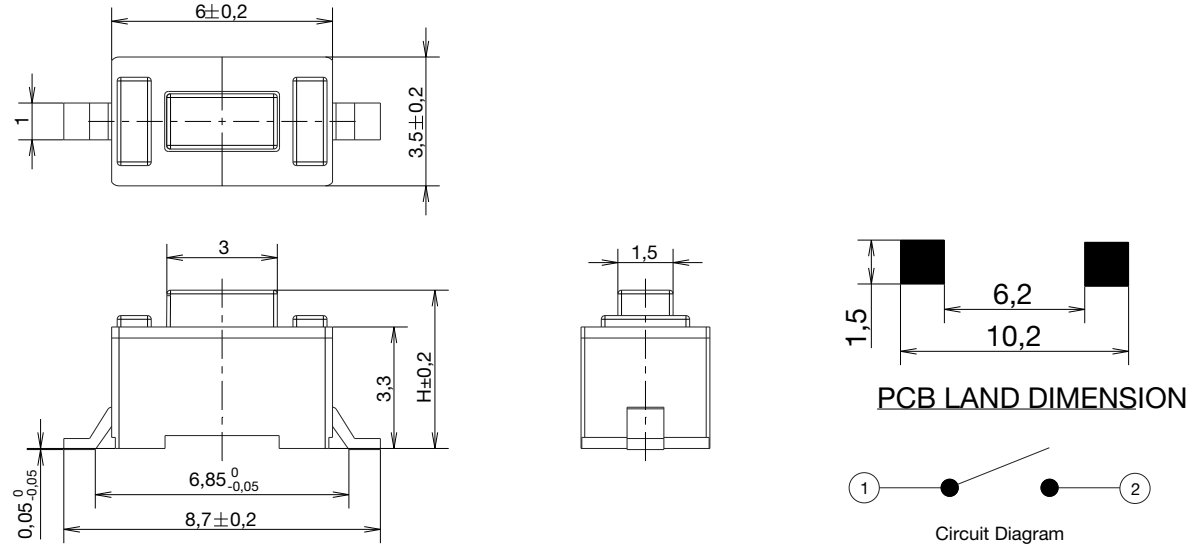

First Angle Projection

Dimensions are shown: mm
Specifications and dimensions subject to change

SMT J leads (4.3 & 5.0 mm height)

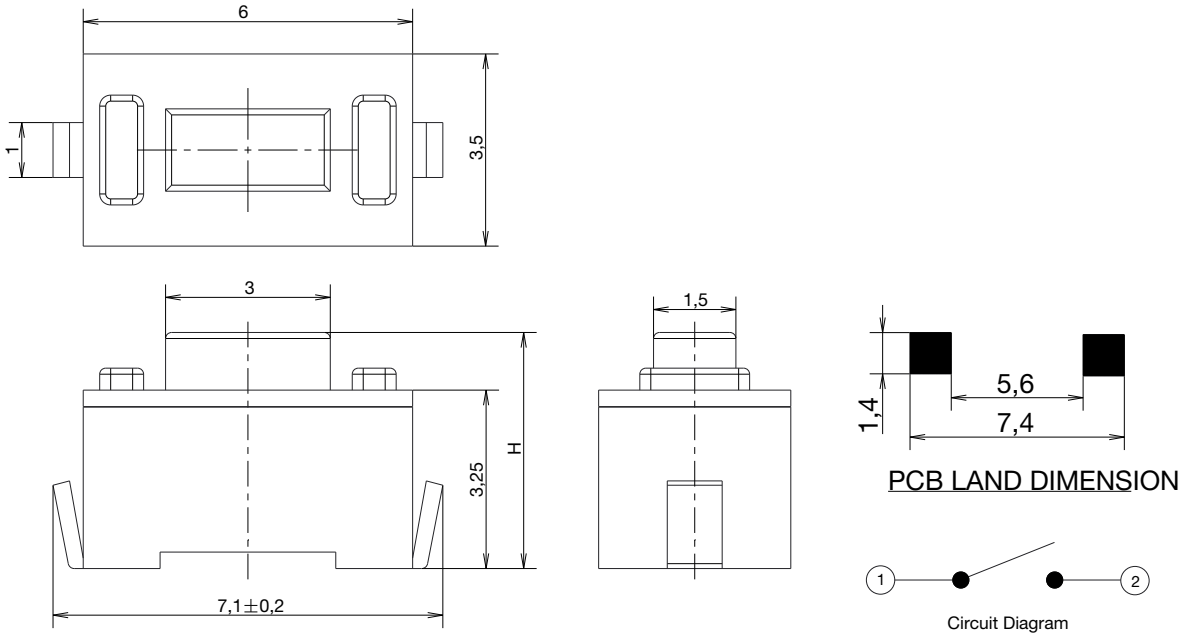

SMT G leads (2.5 mm height)

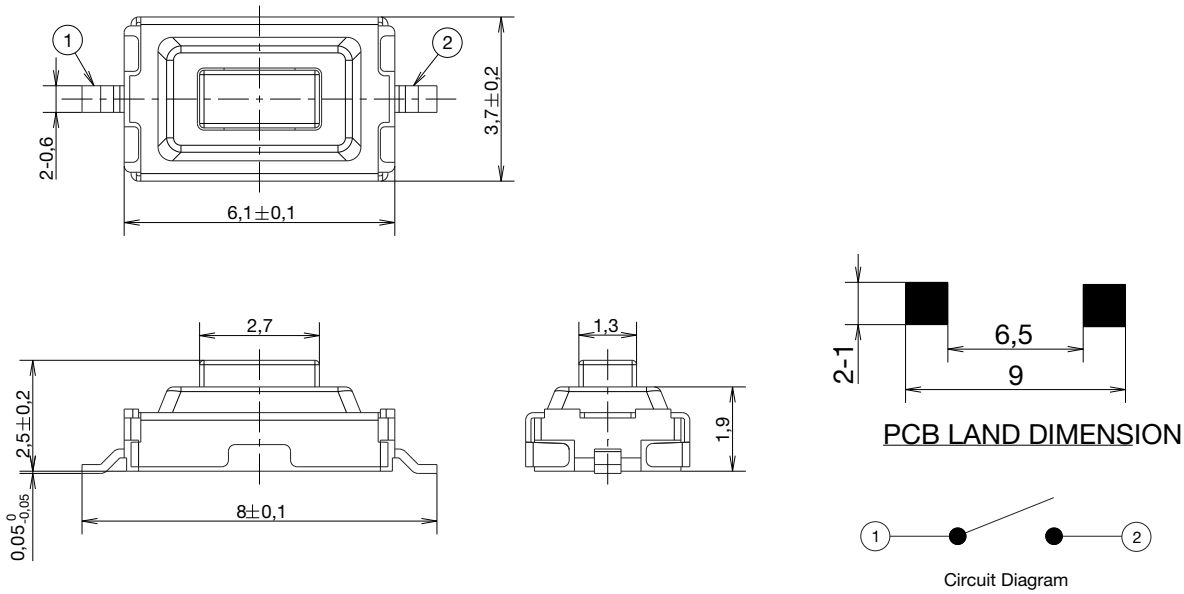

SMT J leads (2.5 mm height)

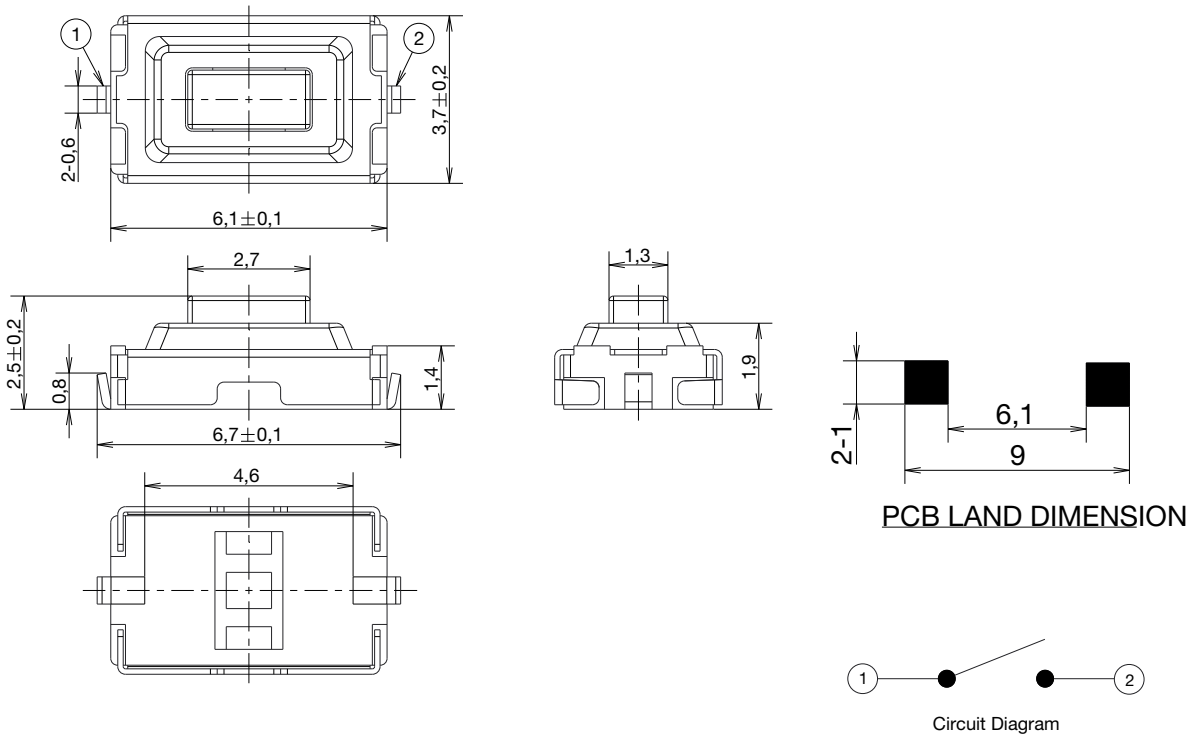

SMT F leads (2.5 mm height)

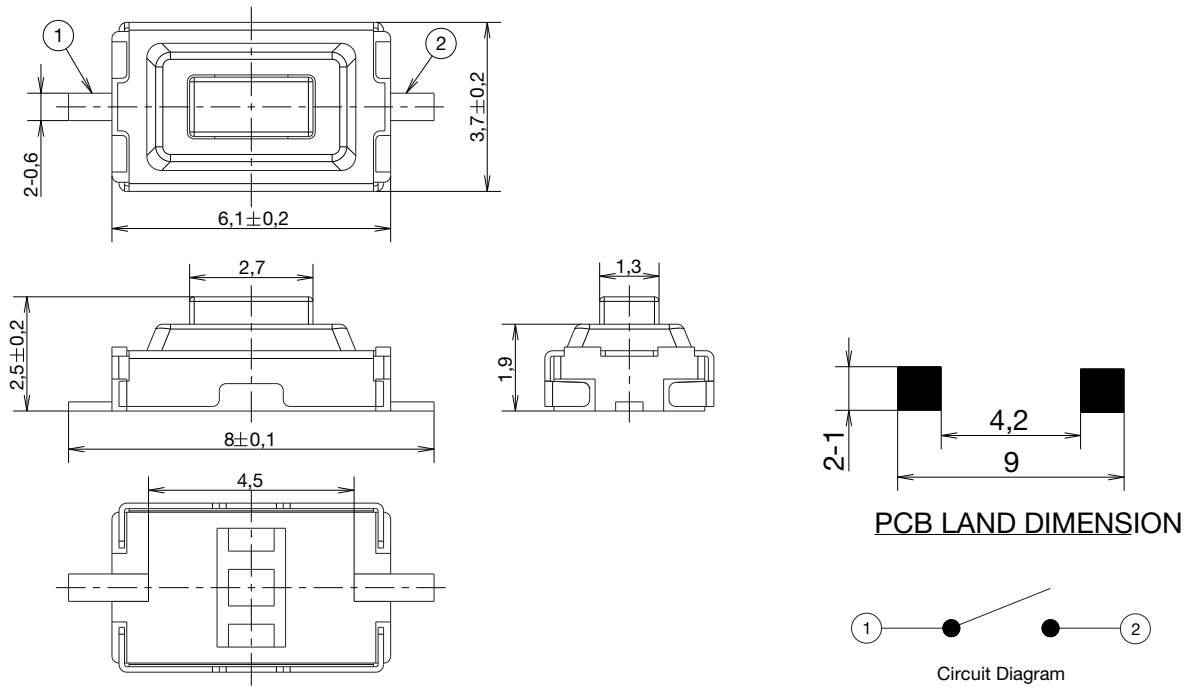

First Angle Projection

Dimensions are shown: mm
Specifications and dimensions subject to change

SMT G leads, with ground pin (2.5 mm height)

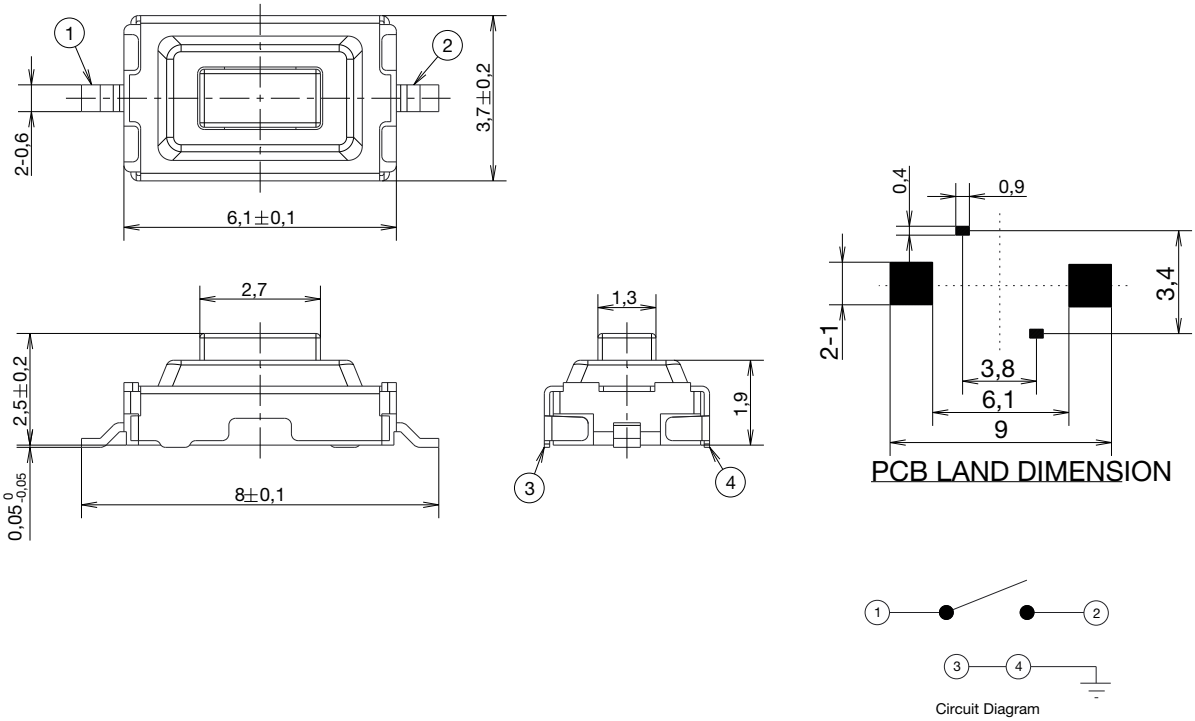

Circuit Diagram

SMT J leads, with ground pin (2.5 mm height)

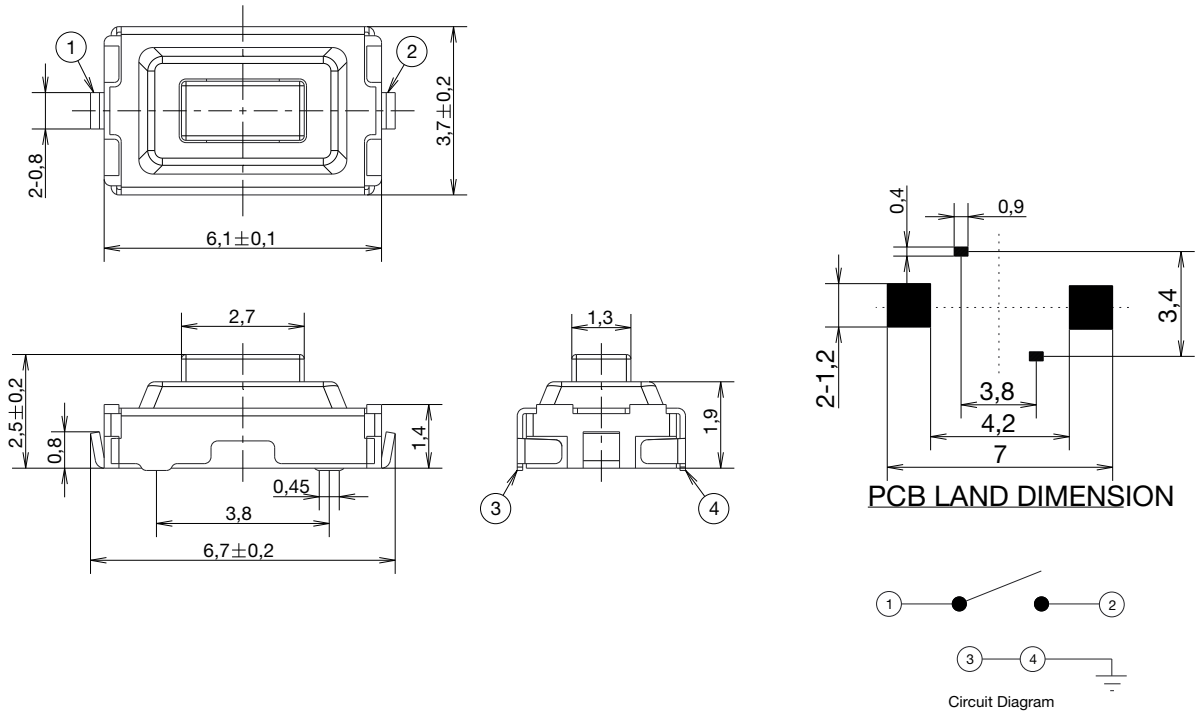

Circuit Diagram

PACKAGING

4.3 and 5.0 mm height - G leads

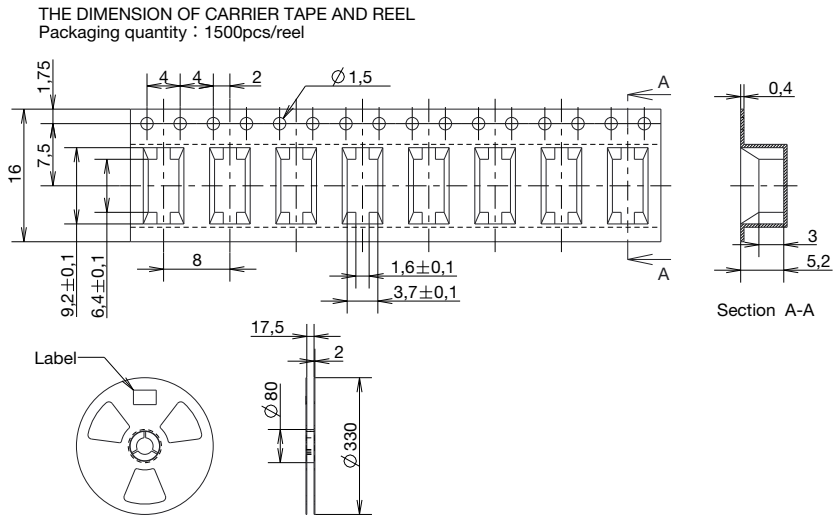

4.3 and 5.0 mm height - J leads

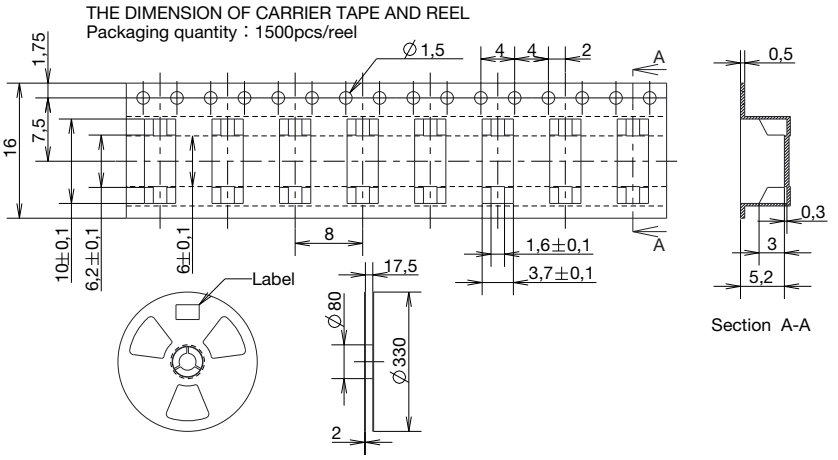

2.5 mm height

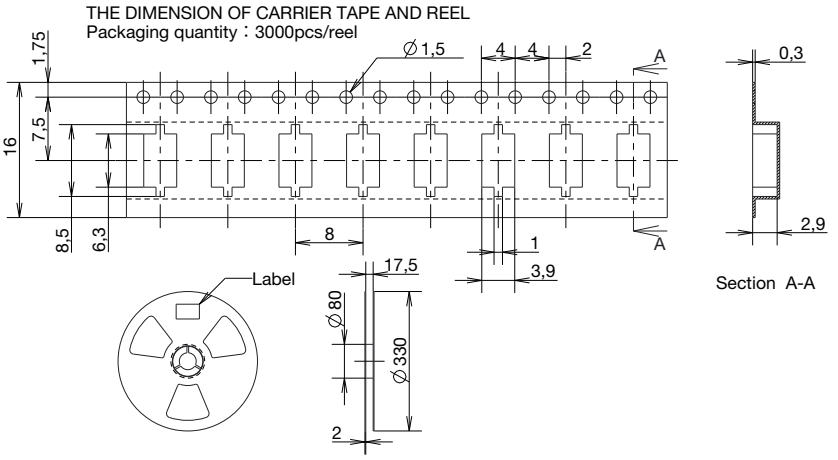

First Angle Projection

Dimensions are shown: mm
Specifications and dimensions subject to change