Temperature controller with digital indicator Model SC58, panel design

Applications

- Temperature control in large plants:
  - General machine building
  - Refrigeration technology
  - Domestic and industrial heating

Special features

- Temperature controller and digital indicator in a single instrument
- Long service life
- Simple operation
- High contact rating, up to 12 A
- For panel mounting



Temperature controller with digital indicator, panel design, model SC58

Description

The model SC58 is a temperature controller for simple thermostat applications. It features simple operation and a high switch rating.

The design of the model SC58 enables the controller to be used as an alternative to the purely mechanical remote-reading thermometer (model TF58). In comparison to mechanical thermostats, the SC58 can handle significantly more switching cycles and thus has a higher operating life.

Data sheets showing similar products:
Expansion thermometer, panel design; models TF58, TF59; see data sheet TM 80.02

WIKA
Part of your business

Standard version

Nominal size in mm
Front dimensions: 62 x 28 mm
Mounting dimensions: 58.2 x 25.2 mm

Sensor element
Pt100 resistance thermometer (preset), Pt1000 or PTC (selectable via software menu)

Measuring range
Pt100, Pt1000: -80 … +400 °C
PTC: -50 … +130 °C

Measuring accuracy
±1 K or ±0.5 % of measuring range (greater value applies)
The actual value display can be an integer or have a resolution of 0.5 K or 0.1 K

Display
3-digit LED display, 13 mm high, colour red

Power supply
Model SC58.230:
AC 230 V, 50/60 Hz, current consumption max. 20 mA

Model SC58.024:
AC 12 ... 24 V, DC 12 ... 36 V, current consumption max. 30 mA

Switching output
Relay output AC 250 V/12 A (2.2 A inductive load), change-over contact

Electrical connections
Screw terminals for cable up to 1.5 mm²

Case
Plastic, black

Weight
approx. 200 g

Ingress protection
Front panel IP 50 (for panel mounting)
Terminals IP 00

Mounting option
Snap-in mounting

Permissible ambient conditions
Storage temperature: -20 … +70 °C
Operating temperature: 0 … 50 °C
Relative humidity: max. 75 %, no condensation

Connection diagram

Model SC58.024

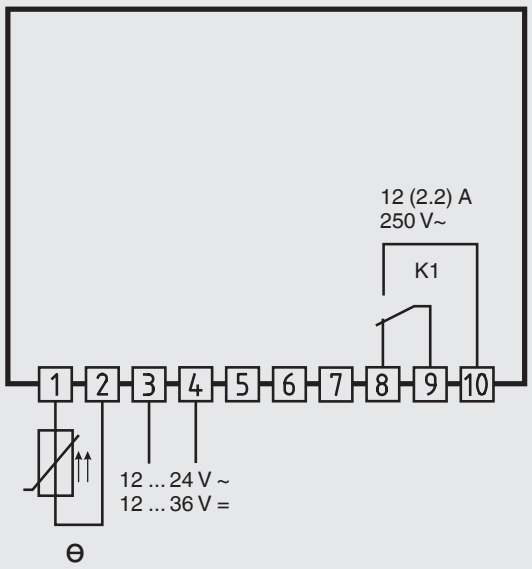

Model SC58.230

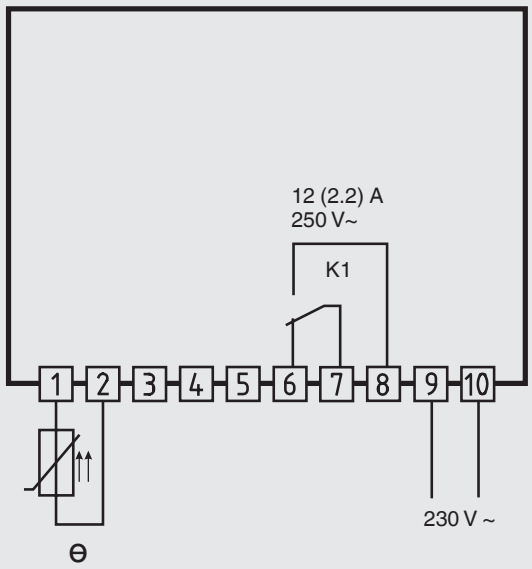

Dimensions in mm

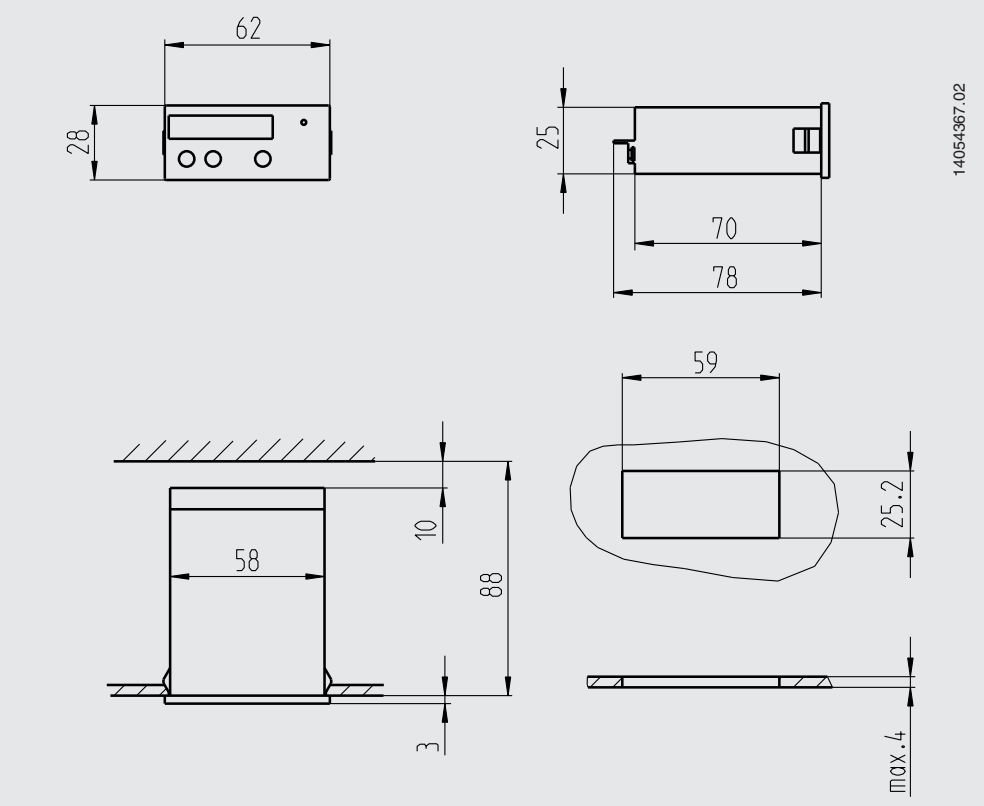

CE conformity

EMC directive
2004/108/EC, EN 61326 Emission (group 1, class B) and interference immunity (industrial application)

Low voltage directive
2006/95/EC, EN 60730-1 and EN 60730-2-9

Order information

Instrument version	Order number
Model SC58.230 (AC 230 V)	14054712
Model SC58.024 (AC 12 ... 24 V or DC 12 ... 36 V)	14054713

Ordering information

To order the described product the given order number is sufficient.

© 2012 WIKA Alexander Wiegand SE & Co. KG, all rights reserved.
The specifications given in this document represent the state of engineering at the time of publishing.
We reserve the right to make modifications to the specifications and materials.

WIKA Alexander Wiegand SE & Co. KG
Alexander-Wiegand-Straße 30
63911 Klingenberg/Germany
Tel. +49 9372 132-0
Fax +49 9372 132-406
info@wika.de
www.wika.de