

Overload relay, 6-9A, 1N/O+1N/C

Part no. ZE-9
Article no. 014708
Catalog No. XTOM009AC1

Powering Business Worldwide

Delivery programme

Product range			ZE overload relays for mini contactor relays
Phase-failure sensitivity			IEC/EN 60947, VDE 0660 Part 102
Description			Test/off button Reset pushbutton manual/auto Trip-free release
Mounting type			Direct mounting
Setting range			
Overload releases	I_r	A	6 - 9
Contact sequence			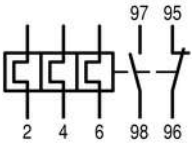
Auxiliary contacts			
N/O = Normally open			1 N/O
N/C = Normally closed			1 N/C
For use with			DILEM DIULEM/21/MV SDAINLEM
Short-circuit protection			
Type “1” coordination	gG/gL	A	35
Type “2” coordination	gG/gL	A	10

Notes

Overload release: tripping class 10 A

Short-circuit protection: Observe the maximum permissible fuse of the contactor with direct device mounting.

Suitable for protection of Ex e-motors

II (2) G

PTB 10 ATEX 3014

Observe manual MN03407003Z-DE/EN.

Notes
When fitted directly to the contactor a clearance of at least 5 mm is required between the overload relays.

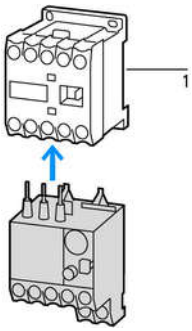

1 Contactor

Technical data

General

Standards			IEC/EN 60947, VDE 0660, UL, CSA
Climatic proofing			Damp heat, constant, to IEC 60068-2-78 Damp heat, cyclic, to IEC 60068-2-30
Ambient temperature		°C	
			Operating range to IEC/EN 60947 PTB: -5 °C - +55 °C
Open		°C	- 25 - 50
Enclosed		°C	- 25 - 40
Temperature compensation			Continuous
Weight		kg	0.07
Mechanical shock resistance		g	10 Sinusoidal Shock duration 10 ms
Degree of Protection			IP20
Protection against direct contact when actuated from front (EN 50274)			Finger and back-of-hand proof

Main conducting paths

Rated impulse withstand voltage	U_{imp}	V AC	6000
Overvoltage category/pollution degree			III/3
Rated insulation voltage	U_i	V	690
Rated operational voltage	U_e	V AC	690
Safe isolation to EN 61140			
Between auxiliary contacts and main contacts		V AC	300
Between main circuits		V AC	300
Temperatur compensation residual error > 40 °C			0.25 %/K
Current heat loss (3 conductors)			
Lower value of the setting range		W	2.5
Maximum setting		W	6
Terminal capacities		mm^2	
Solid		mm^2	2 x (0.75 - 2.5)
Flexible with ferrule		mm^2	2 x (0.5 - 1.5)
Solid or stranded		AWG	18 - 14
Terminal screw			M3.5
Tightening torque		Nm	1.2
Tools			
Pozidriv screwdriver		Size	2
Standard screwdriver		mm	0.8 x 5.5

Auxiliary and control circuits

Rated impulse withstand voltage	U_{imp}	V	4000
Overvoltage category/pollution degree			III/3
Terminal capacities		mm^2	
Solid		mm^2	2 x (0.75 - 2.5)
Flexible with ferrule		mm^2	2 x (0.5 - 1.5)
Solid or stranded		AWG	2 x (18 - 12)

Terminal screw			M3.5
Tightening torque		Nm	0.8 - 1.2
Tools			
Pozidriv screwdriver		Size	2
Standard screwdriver		mm	0.8 x 5.5
Rated insulation voltage	U_i	V AC	500
Rated operational voltage	U_e	V AC	500
Safe isolation to EN 61140			
between the auxiliary contacts		V AC	300
Conventional thermal current	I_{th}	A	6
Rated operational current	I_e	A	
AC-15			
Make contact			
120 V	I_e	A	1.5
220 V 230 V 240 V	I_e	A	1.5
380 V 400 V 415 V	I_e	A	0.5
500 V	I_e	A	0.3
Break contact			
120 V	I_e	A	1.5
220 V 230 V 240 V	I_e	A	1.5
380 V 400 V 415 V	I_e	A	0.7
500 V	I_e	A	0.5
DC-13 L/R - 15 ms			
24 V	I_e	A	0.9
60 V	I_e	A	0.75
110 V	I_e	A	0.4
220 V	I_e	A	0.2
Short-circuit rating without welding			
max. fuse		A gG/gL	4

Notes

Notes Ambient temperature: operating range to IEC/EN 60947, PTB: -5°C to +50°C
Rated operational current: Making and breaking conditions to DC-13, L/R constant as stated

Data for design verification according to IEC/EN 61439

Technical data for design verification			
Rated operational current for specified heat dissipation	I_n	A	9
Heat dissipation per pole, current-dependent	P_{vid}	W	0
Equipment heat dissipation, current-dependent	P_{vid}	W	6
Static heat dissipation, non-current-dependent	P_{vs}	W	0
Heat dissipation capacity	P_{diss}	W	0
IEC/EN 61439 design verification			
10.2 Strength of materials and parts			
10.2.2 Corrosion resistance			Meets the product standard's requirements.
10.2.3.1 Verification of thermal stability of enclosures			Meets the product standard's requirements.
10.2.3.2 Verification of resistance of insulating materials to normal heat			Meets the product standard's requirements.
10.2.3.3 Verification of resistance of insulating materials to abnormal heat and fire due to internal electric effects			Meets the product standard's requirements.
10.2.4 Resistance to ultra-violet (UV) radiation			Meets the product standard's requirements.
10.2.5 Lifting			Does not apply, since the entire switchgear needs to be evaluated.
10.2.6 Mechanical impact			Does not apply, since the entire switchgear needs to be evaluated.
10.2.7 Inscriptions			Meets the product standard's requirements.
10.3 Degree of protection of ASSEMBLIES			Does not apply, since the entire switchgear needs to be evaluated.
10.4 Clearances and creepage distances			Meets the product standard's requirements.
10.5 Protection against electric shock			Does not apply, since the entire switchgear needs to be evaluated.
10.6 Incorporation of switching devices and components			Does not apply, since the entire switchgear needs to be evaluated.

10.7 Internal electrical circuits and connections			Is the panel builder's responsibility.
10.8 Connections for external conductors			Is the panel builder's responsibility.
10.9 Insulation properties			
10.9.2 Power-frequency electric strength			Is the panel builder's responsibility.
10.9.3 Impulse withstand voltage			Is the panel builder's responsibility.
10.9.4 Testing of enclosures made of insulating material			Is the panel builder's responsibility.
10.10 Temperature rise			The panel builder is responsible for the temperature rise calculation. Eaton will provide heat dissipation data for the devices.
10.11 Short-circuit rating			Is the panel builder's responsibility. The specifications for the switchgear must be observed.
10.12 Electromagnetic compatibility			Is the panel builder's responsibility. The specifications for the switchgear must be observed.
10.13 Mechanical function			The device meets the requirements, provided the information in the instruction leaflet (IL) is observed.

Technical data ETIM 5.0

Low-voltage industrial components (EG000017) / Thermal overload relay (EC000106)			
Electric engineering, automation, process control engineering / Low-voltage switch technology / Overload protection device / Thermal overload relay (ecl@ss8-27-37-15-01 [AKF075010])			
Adjustable current range		A	6 - 9
Mounting method			Direct attachment
Connection type main current circuit			Screw connection
Number of auxiliary contacts as normally closed contact			1
Number of auxiliary contacts as normally open contact			1
Number of auxiliary contacts as change-over contact			0
Release class			CLASS 10

Approvals

Product Standards			UL 508; CSA-C22.2 No. 14; IEC/EN 60947-4-1; IEC/EN 60947-5-1; CE marking
UL File No.			E29184
UL Category Control No.			NKCR
CSA File No.			12528
CSA Class No.			3211-03
North America Certification			UL listed, CSA certified
Specially designed for North America			No
Suitable for			Branch circuits
Max. Voltage Rating			600 V AC
Degree of Protection			IEC: IP20, UL/CSA Type: -

Characteristics

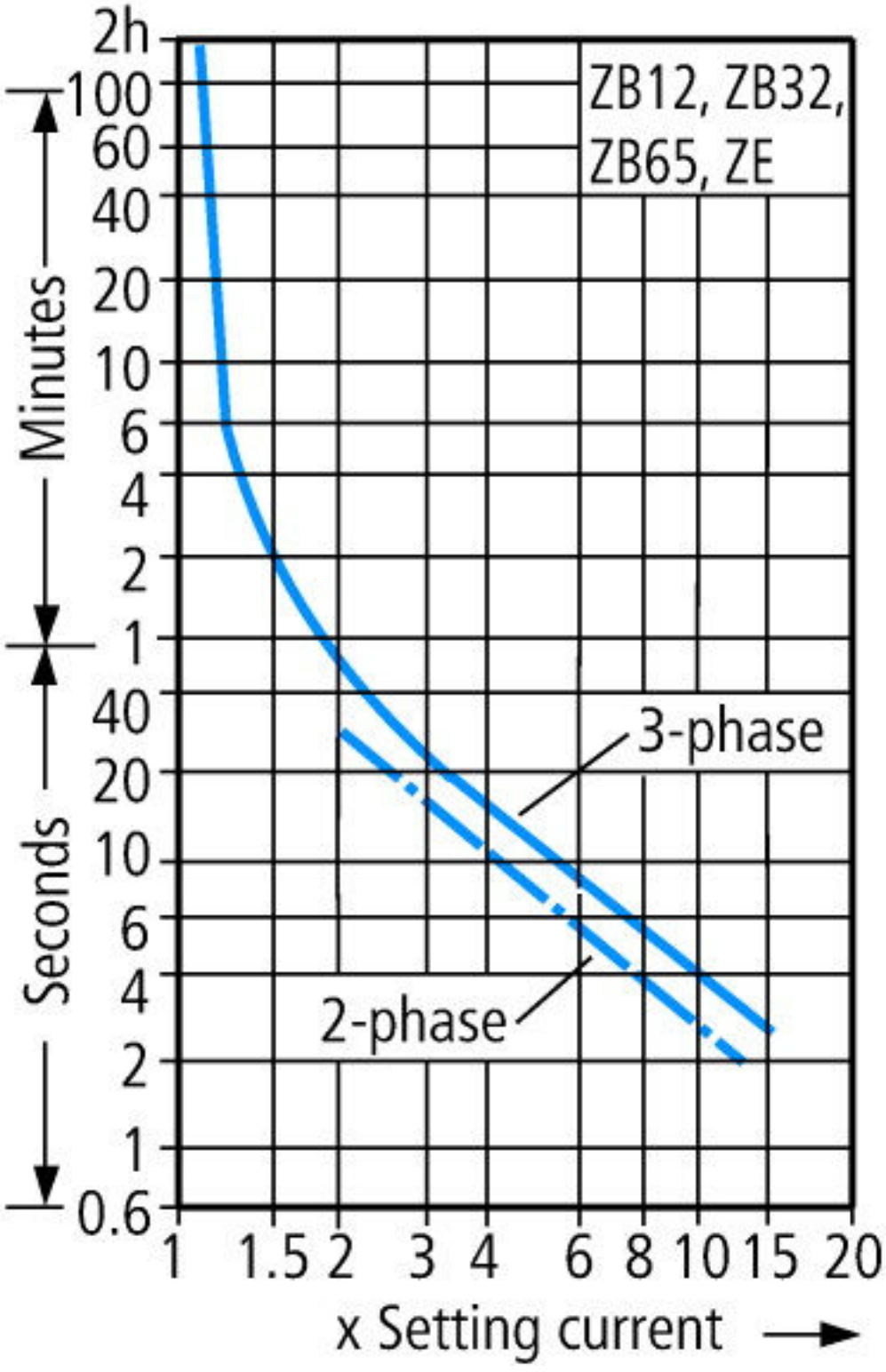

These tripping characteristics are mean values of the spread at 20 °C ambient temperature in a cold state. Tripping time depends on response current.
On devices at operating temperature the tripping time of the overload relay drops to approx. 25 % of the read value. Specific characteristics for each individual setting range can be found in the manual.

Dimensions

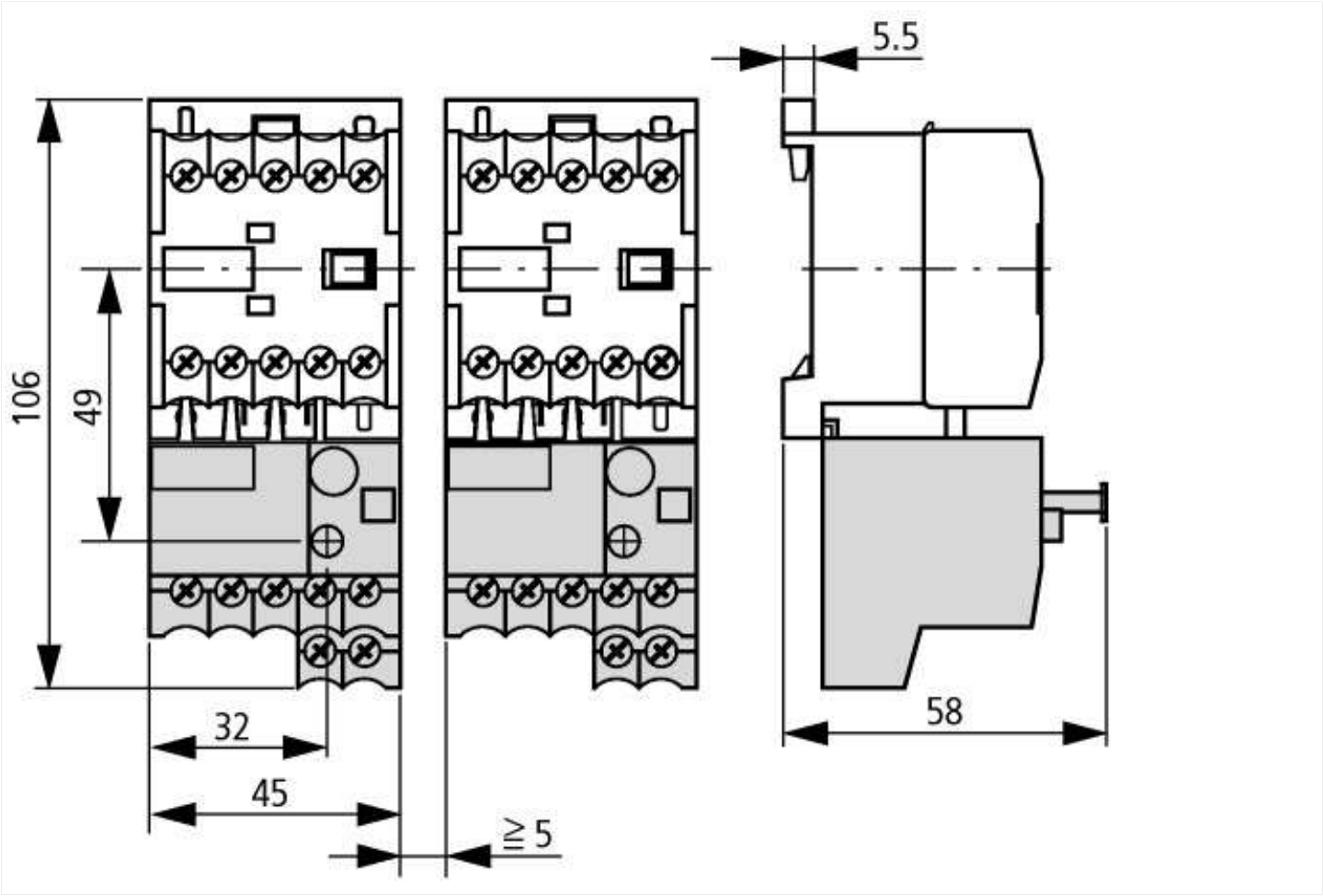

Additional product information (links)

IL03407007Z (AWA2300-0883) Overload relay	
IL03407007Z (AWA2300-0883) Overload relay	ftp://ftp.moeller.net/DOCUMENTATION/AWA_INSTRUCTIONS/IL03407007Z2010_10.pdf
MN03407003Z (AWB2300-1425) Overload relay ZE, overload monitoring for EEx e-motors	
MN03407003Z (AWB2300-1425) Overload relay ZE, overload monitoring for EEx e-motors - Deutsch / English	ftp://ftp.moeller.net/DOCUMENTATION/AWB_MANUALS/MN03407003Z_DE_EN.pdf

© 12/2014 by Eaton Industries GmbH