Your Expert Partner for **Human Machine Interfaces**

Actuator

Distribution by
Rs-online

704.006.718



https://rs-online.eao.com/component/704.006.7...

Your product:



704.006.718
Actuator

FRONT

Front dimension:	Ø 35 mm
Front form:	Round
Front bezel colour:	Nature
Front bezel material:	Aluminium

MOUNTING

Design:	Flush
Mounting cut-out:	Ø 30.5 mm
Mounting type:	Panel mounting

OPERATING-/INDICATION PART

Lens colour:	Colourless
Lens material:	Plastic
Lens shape:	Flush
Lens optics:	transparent
Marking plate illumination:	illuminative

ELECTRICAL CHARACTERISTICS

Standards:	The switches comply with the “Standards for low-voltage switching devices” DIN EN 60947-1

MECHANICAL CHARACTERISTICS

Terminal:	Screw terminal

Weight:	0.045 kg

AMBIENT CONDITION

IP Protection:	IP65 front side
Operating temperature:	– 40 °C ... + 55 °C
Storage temperature:	– 40 °C ... + 85 °C

CERTIFICATE

REACH:	REACH compliant
RoHS:	RoHS compliant

OTHER

Short Description:	Actuator, Ø 30.5 mm, Ø 35 mm, Flush, Colourless, Plastic, transparent, Round, Nature, Aluminium, anodised, Screw terminal
Housing colour:	Grey
Housing material:	Plastic
Hints:	The colour of anodised aluminium parts can vary due to technical production reasons

Wiring diagrams:

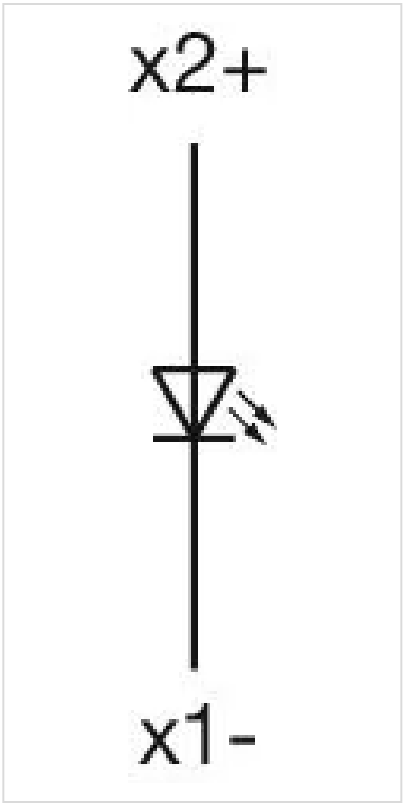

Mounting cut-outs:

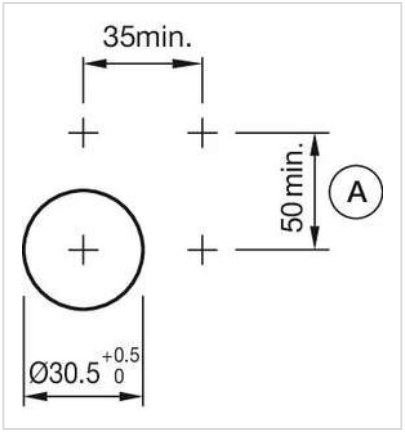

A = Screw terminal

Dimension drawings:

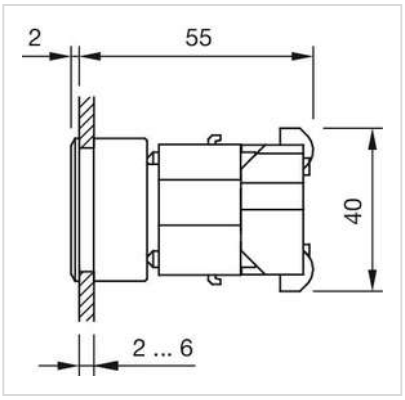

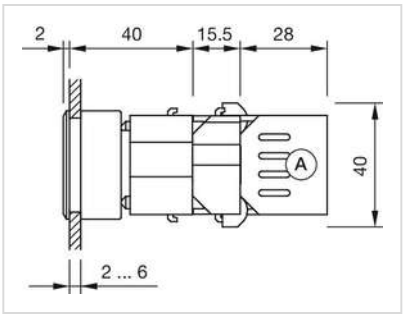

A = Screw terminal