Brand of NTN corporation

Technical data

EXFE206

Bearing units



Grey cast housing, radial insert ball bearing with eccentric locking collar, seal with slinger

KIT CONTENT

EX206G2, FE206

VISUAL (S)

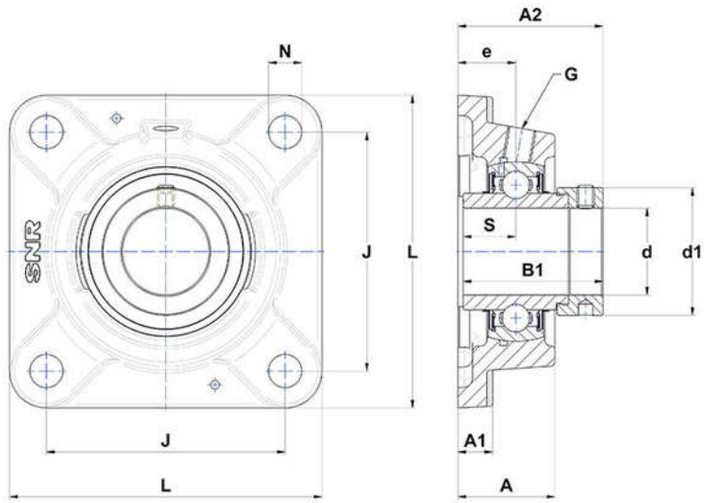

PRODUCT DEFINITION

Brand	SNR
A - Housing height	33,5 mm
A1 - Housing foot height / flange height	12 mm
A2 - Total height from mounting surface	50,1 mm
B - Width of Inner Ring	36,4 mm
B1 - Overall width Inner Ring	48,3 mm

PRODUCT DEFINITION	
d - Shaft diameter	30 mm
d1 - Outer dia of eccent. Lock. collar / nut of adapter sleeve	44,1 mm
e - Distance mounting surface to bearing center	20 mm
G - Grease fitting	R1/8"
J - Mounting holes distance	82,5 mm
L - Housing width / diameter	108 mm
N - Mounting hole dimension	11,5 mm
S - Distance front side/bearing centre	18,2 mm

PRODUCT PERFORMANCE	
C - Dynamic load rating	19500000 mN
C0 - Static load rating	11200000 mN
Operating temperature min.	253,15 °K
Operating temperature max.	373,15 °K

OTHER FEATURES	
Mass	1,25 kg
Recommended tightening torque for set screw	11.5 N-m