MURR ELEKTRONIK
stay connected

Valve plug MJC 0° with cable LED

PUR 2x0.75 bk 3m

Art.No.: 7000-70021-7500300
Weight: 0.163
Country of origin: DE
Model designation: MSUDK-TAB*L-750_3.0

Female straight
10...30 V AC/DC
LED
Plastic housings with good resistance against chemicals and oils.
The resistance to aggressive media should be individually tested for your application. Further details on request.
Further cable lengths on request.

Link to Product

Illustration



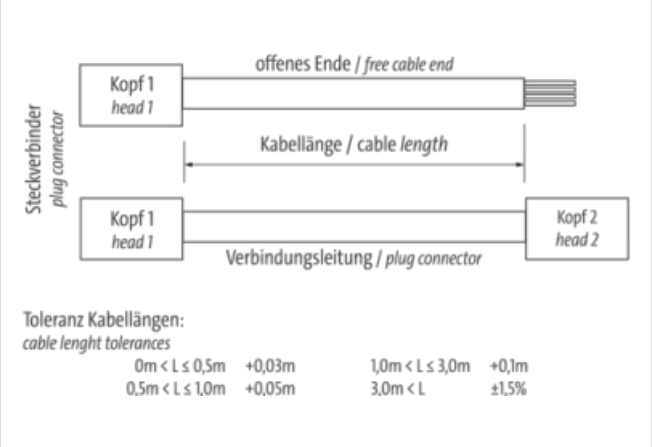

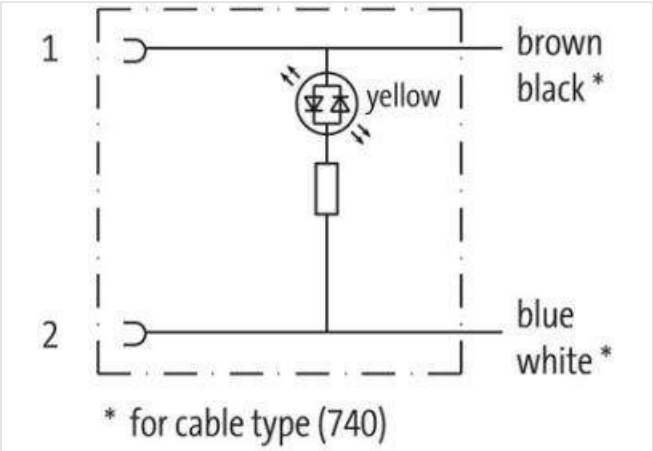

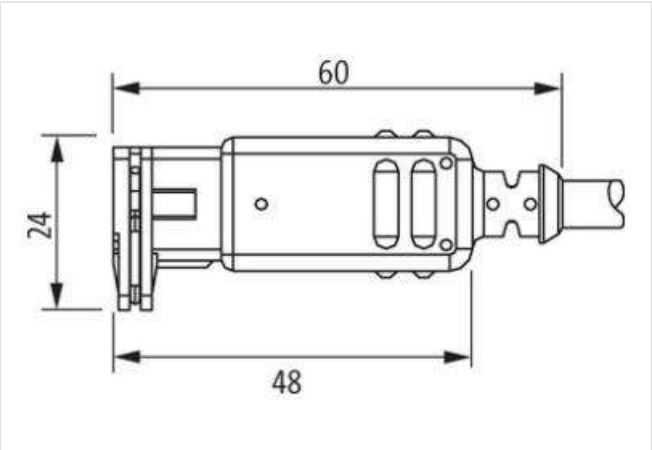

The information in this Product-PDF has been compiled with the utmost care.
Liability for the correctness completeness and topicality of the information is restricted to gross negligence. Version: 2025-02-16

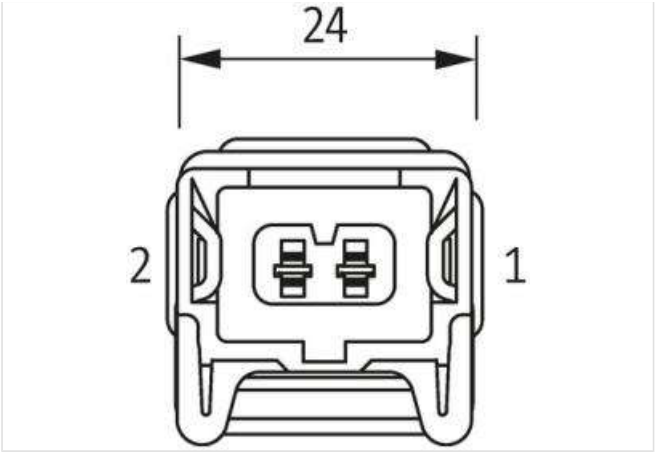

Product may differ from Image

Cable length	3 m
Commercial data	
ECLASS-6.0	27279218
ECLASS-6.1	27279218
ECLASS-7.0	27279218
ECLASS-8.0	27279218
ECLASS-9.0	27060312
ECLASS-10.1	27060312
ECLASS-11.1	27060312
ECLASS-12.0	27060312
ETIM-5.0	EC001855
customs tariff number	85444290
GTIN	4048879135573
Packaging unit	1
Electrical data | Supply	
Operating voltage AC min.	10 V
Operating voltage AC max.	30 V
Operating voltage DC min.	10 V
Operating voltage DC max.	30 V
Current operating per contact max.	4 A
Current consumption max.	12 mA
Diagnostics	
Status indication LED	yellow
Device protection | Electrical	
Degree of protection (EN IEC 60529)	IP65
Additional condition protection degree	inserted, locked
Rated surge voltage	0,8 kV
Device protection | Media	
Flame resistance	flame retardant
Mechanical data | Material data	
Color housing	black
Material housing	Plastic
Environmental characteristics | Climatic	
Operating temperature min.	-25 °C
Operating temperature max.	85 °C

The information in this Product-PDF has been compiled with the utmost care.
Liability for the correctness completeness and topicality of the information is restricted to gross negligence. Version: 2025-02-16

Additional condition temperature range	depending on cable quality
Important installation notes	
Note on strain relief	Protect the connectors by suitable measures from mechanical loads, e.g. by the usage of cable ties.
Note on bending radius	**Attention:** Observe the permissible bending radii when laying cables, as the IP protection class can be endangered by excessive bending forces.
Installation | Cable	
wire arrangement	brown, blue
Cable identification	750
Jacket Color	black
Amount stranding	1
Stranding	2 wires twisted
Stranding factor min.	75 mm
Stranding factor max.	75 mm
wire arrangement	brown, blue
Cable weigth	48,4 g/m
Material jacket	PUR
Shore hardness jacket	85 Shore A
Freedom from ingredients (jacket)	lead-free, CFC-free
Outer-diameter (jacket)	5,9 mm
Tolerance outer diameter (sheath)	± 5 %
Material inner jacket	PVC
Color (inner jacket)	gray
Material wire insulation	PVC
Amount wires	2
Outer diameter insulation	2 mm
Outer diameter tolerance core insulation	± 5 %
Shore hardness wire insulation	92 Shore A
Ingredient freeness wire insulation	lead-free, CFC-free
Amount strands (wire)	24
Diameter of single wires	0,2 mm
Conductor crosssection (wire)	0,75 mm²
Material conductor wire	Stranded copper wire, bare
Conductor type (wire)	Strand class 5
Nominal voltage AC max.	300 V
Current load capacity (standard)	to DIN VDE 0298-4
Current load capacity min. wire	12 A
Electrical resistance line constant wire	26 Ω/km @ 20 °C
AC withstand voltage (wire - wire)	2 kV @ 60 s
Power frequency withstand voltage (wire - jacket)	2 kV @ 60 s
Min. operating temperature (static)	-40 °C
Max. operating temperature (fixed)	80 °C
Operating temperature min. (dynamic)	-5 °C
Operating temperature max. (dynamic)	80 °C
UV resistance	DIN EN ISO 4892-2 A
Flame resistance	UL 1581 § 1100 FT2 | IEC 60332-2-2 | UL 1581 § 1090
chemical resistance	Good, application-related testing
Gasoline resistance	Good, application-related testing
Oil resistance	Good, application-related testing | DIN EN 60811-404
Bending radius (dynamic)	15 x Outer diameter

The information in this Product-PDF has been compiled with the utmost care.
Liability for the correctness completeness and topicality of the information is restricted to gross negligence. Version: 2025-02-16